www.hydraulic.co.kr



PARTS
CATALOG

**HYDRAULIC PUMPS & MOTORS
FOR HEAVY CONSTRUCTION EQUIPMENT,
MARINE AND INDUSTRY**

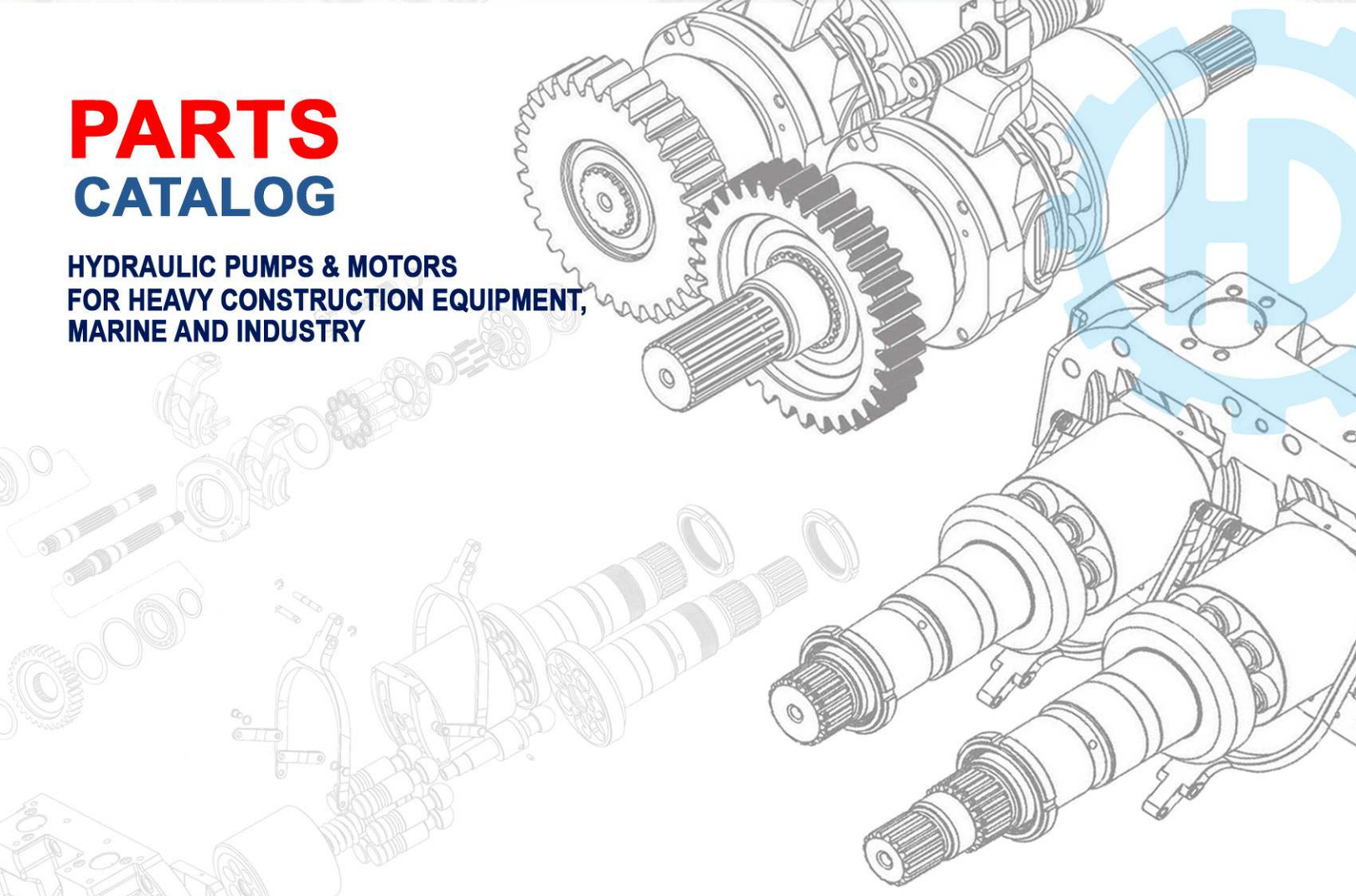

SINCE 1987
HANDOK HYDRAULIC
한독하이드로릭

Production Facilities





Shop Floor and each of Divisions




















HPV0102 MAIN PUMP


H5V200DPH MAIN PUMP


H3V112 MAIN PUMP


HPV116 MAIN PUMP


H3V280SH SINGLE PUMP

Han Dok Hydraulic Company has been known as a leading manufacturer in this field and we are ahead of the competition when it comes to quality, delivery & price.

CEO Message

Firstly we would like to express our sincere thanks for your warm patronage extended to our products so far.Since the company's foundation in 1987 starting repairing business of hydraulic pumps for heavy construction equipments. HanDok Hydraulic has been engaging in producing a wide range of replacements parts for hydraulic pumps and motors for various heavy construction equipments and industry machinery from 1991.

As a leading manufacturer in hydraulic pump&motor components makers in Korea with modernized equipments and machinery backed up with accumulated technology and a lot of experience, we have been supplying our quality products to our valued customers at home and abroad.

We always make every efforts to produce perfect quality products with competitive price.

We are try to do our best in order to obtain a worldwide reputation through our continuous R&D. We sincerely hope this brochure will be helpful for you to understand our scope of products and we will put top priority on the quality assurance to meet your needs at the right time with competitive price and prompt delivery.

We look forward to having a opportunity to serve you in the very near future.

president
Ra Kyung Bae

Company History

The establishment stage

- HANDOK HYDRAULIC Company was estalished in June 1987 at Busan-City, Korea.
- Started not only repairing but also producing in component parts of Hydraulic Pump and Motor.



1987

The pioneering stage

- Moved factory to Gimhae city.
- Beginning to brass brazing process on the surface (Cylinder block & Valve plate).
- Opened a researching department by KIMM "korea institute of machinery and materials" for Swash Plate type Axis piston Pumps & Motors and Bent Axis type piston Pumps & Motors for hydraulic components.
- Beginning to test Hydraulic Pump & motor assembly by test machine.



1988 -2001

The leaping stage

- Opened second factory in Gimhae city in order to increase productions line.
- Appointed the "Clean company" by the environment administration office.
- Acquired the certificate of ISO 14000, ISO9001 system by BSI "British standards institution".
- Acquired the patent for Bent Axial type Hydraulic Pumps and Motors of HSTM, system from Korea, China , etc.
- Registered trademark HD. "Han-Dok Hydraulic" in Korea, China, Vietnam, Malaysia, Indonesian, etc.
- Production the complete units (assembly) not only bent axis type axial piston Pumps but also Swash Plate axis type axial piston Pumps.
- Beginning to produce the gear Pump assembly.
- Appointed "top ranking company" by the small and medium industries administration in korea.
- Acknowledged as one of the best prospective company by KIMM "korea institute of machinery and materials".



2002 -2006

2007 -2017

The rebounding stage

- Opened third factory in Gimhae city in order to increase productions line.
- Acquired the brazing patent for Cylinder Block (Barrel) in the Swash Plate type and Bent Axial type Pumps and Motors from Korea.
- Trade mark application in USA, INDIA, BRAZIL, RUSSIA and EGYPT.
- Development and production of control valve.
- Development and production of RVDT sensor.





2018

We challenge the world with constant innovation



Global brand standing out among other brands in the world.

HANDOK HYDRAULIC

HANDOK HYDRAULIC's excellent brand power attracting international attention all over the world has established the new energy which changes the world.
The indomitable will pioneering the world the advanced core technology, the outstanding global talent are the growth powers of HANDOK HYDRAULIC.

KOREA AEO
Korea Customs Service
Authorized Economic Operator
Certificate No.
KR AEO 3115024

ISO 9001: 2008



Certificate
of Registration

This is to certify that :

HAN DOK HYDRAULIC CO.

#194-8, Jisan-Dong, Gimhae-Si, Gyeongsan, Korea

Has been assessed by International Certification Registrar Ltd., in respect of their Quality Management Systems and found to comply with

ISO 9001:2008

Approval is hereby granted for registration providing the rules and conditions relating to certification are observed at all times.

Certification Scope

Design and Manufacture of
Hydraulic Pump, Hydraulic Valve, Hydraulic Motor and Hydraulic Parts

Certificate Issue Date : 19th November 2015 Initial issued date : 20th November 2009
Expiration Date : 18th November 2018 Certificate No. : Q13138/07

The Seal of ICR Limited was here to affixed in the presence of :

President

ISO 14001: 2004



Certificate
of Registration

This is to certify that :

HAN DOK HYDRAULIC CO.

#194-8, Jisan-Dong, Gimhae-Si, Gyeongsan, Korea

Has been assessed by International Certification Registrar Ltd., in respect of their Environmental Management Systems and found to comply with

ISO 14001:2004

Approval is hereby granted for registration providing the rules and conditions relating to certification are observed at all times.

Certification Scope

Design and Manufacture of
Hydraulic Pump, Hydraulic Valve, Hydraulic Motor and Hydraulic Parts

Certificate Issue Date : 19th November 2015 Initial issued date : 20th November 2009
Expiration Date : 18th November 2018 Certificate No. : EI1200/07

The Seal of ICR Limited was here to affixed in the presence of :

President

Quality assurance is the most important key of successful business.

■ Management policy

We put first priority on keeping top quality through strict quality control testing at each stage of the production process.

QUALITY POLICY

BEST QUALITY
We produce our goods with the best quality.

REASONABLE PRICE
Our products are with the most reasonable price.

VARIOUS ITEMS
Our various inventory can meet our esteemed customer's needs.

BEST SERVICE
We provide our best service for your satisfaction.

■ Vision

We are proceeding to make better future with constant challenge and passion.

QUALITY POLICY

BEST QUALITY
We pursue top quality

VARIOUS ITEMS
Our various inventory can meet our esteemed customer's needs.

COMPETITIVE PRICE
To give competitive price to our customers is our goal

BEST SERVICE
We provide our best service for your satisfaction.


Form Measuring instrument


Coil Spring Test Machine


3D Precision Measuring Equipment


Brinell & Rock Well Hardness Tester


Quality Control for Hardness


Illumination Meter & Metallurgical Microscope


Inspection for Brass Brazing with Ultrasonic Test


Optical Emisson Spectrometer


Tension And Yield Strength Test

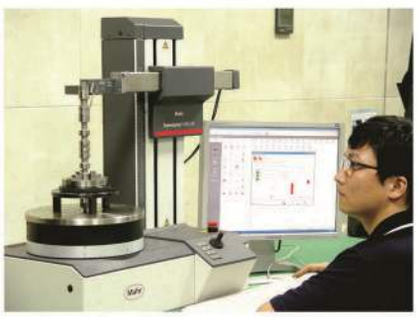
Form Tester


Precision Measuring for Quality Control

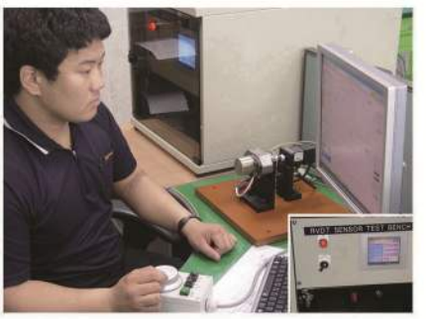
Angle Sensor Tester

VARIOUS TEST MACHINERY

BENCH PUMP TEST



BENCH MOTOR TEST



GEAR PUMP TEST



EPR TEST



REGULATOR TEST



PRESSURE ENDURANCE TEST



VARIOUS TEST MACHINERY

MULTI TEST MACHINERY



HPVO50/O102/O118 PUMP

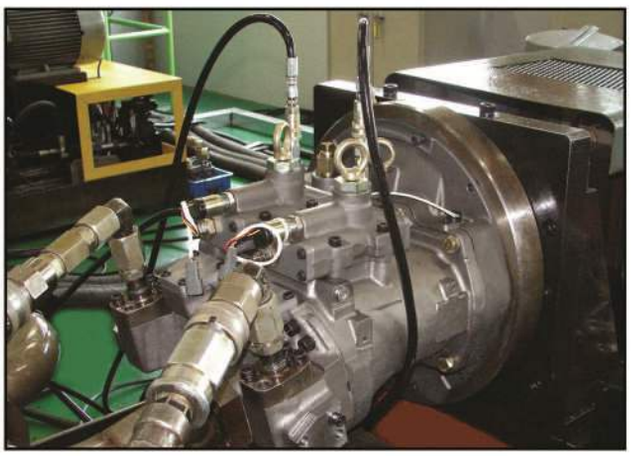

H3V112DTK PUMP

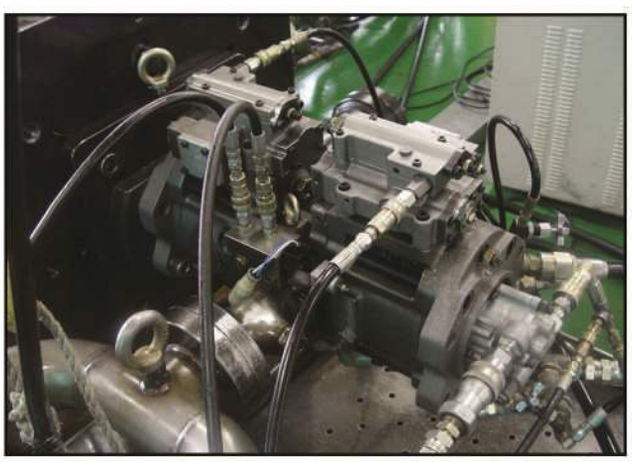

LOAD SENSING CONTROL VALVE

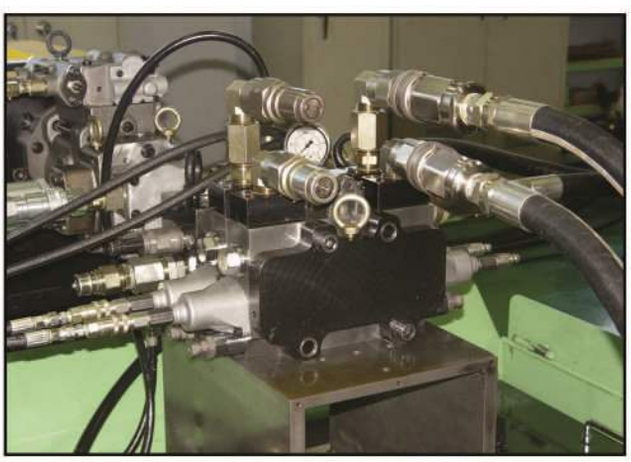

H6VM55/80/107/160/250 MOTOR

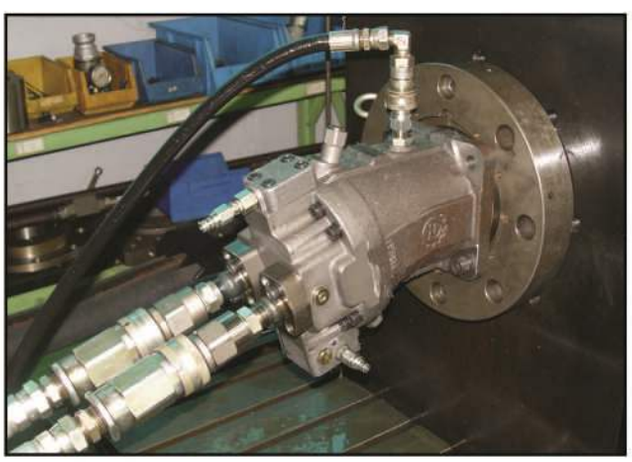

DOUBLE GEAR PUMP

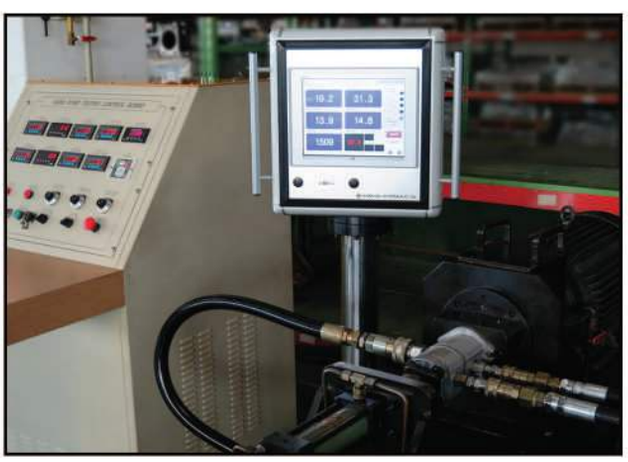

PERFORMANCE CURVE FOR SWASH PLATE & BENT AXIS TYPE PISTON PUMPS

H3V63/112

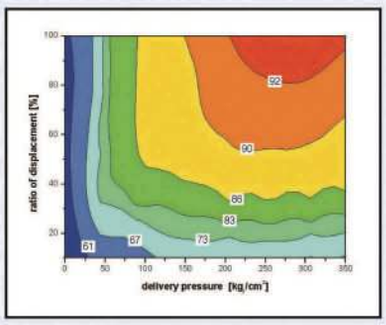

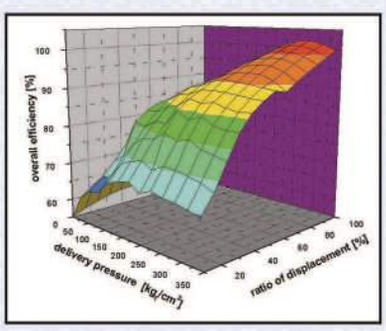

H3V140/180

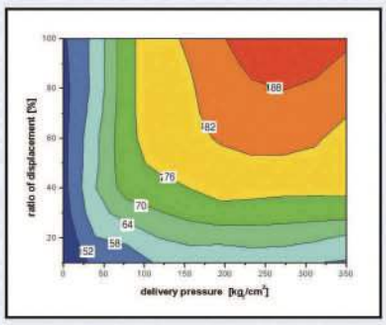

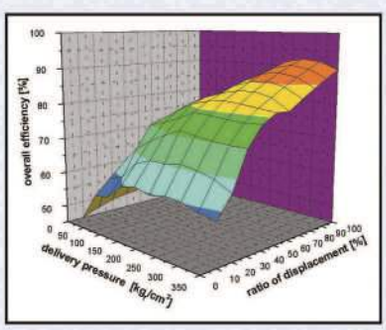

HPV116/145

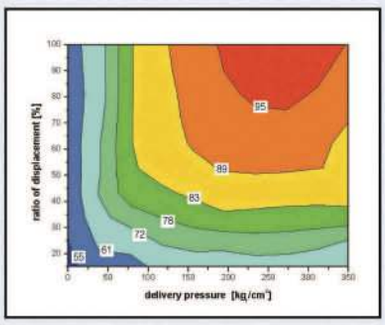

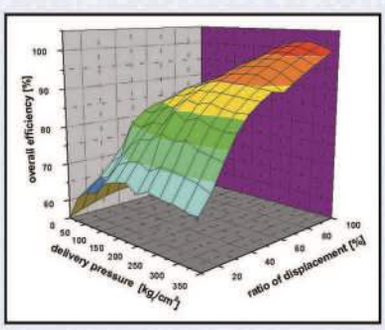

Max. Speed : 2,500rpm
Suction Pressure : 0~1kg/cm²(bar)
Oil Temperature : 50℃ Oil Viscosity : 32mm²/s (cSt)

SWASH PLATE TYPE PISTON PUMPS

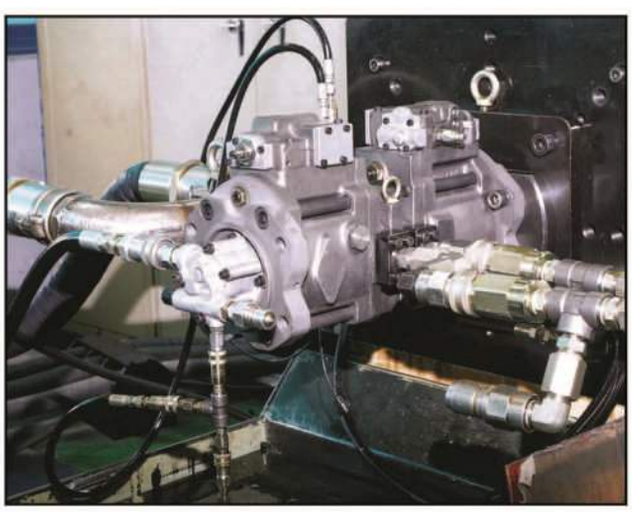

H3V PUMP SERIES (63/112/140/180/280)

BENT AXIS TYPE PISTON PUMPS



HPV 116/145 PUMP SERIES



NO	MAKER	MODEL
1	KAWASAKI	NV SERIES
		NVK SERIES
		H3V / H5V / H7V SERIES
		KVC SERIES
		M2X SERIES
		M5X SERIES
		MX SERIES
		DNB SERIES
2	EATON	33 / 46 / 54
3	UCHIDA / HYDROMATIC / REXROTH	A2F SERIES
		A3V SERIES
		A4V SERIES
		A11V SERIES
		A6V SERIES
		A7V SERIES
		A8V / A8VO SERIES
		A10V SERIES
		AP2D SERIES
4	HITACHI	HPV / HPVO SERIES
		HMGC / HMGF SERIES
		HMT SERIES
		HPKO55K
5	NACHI	PVD - 00B / 0B / 1B / 2B / 3B

NO	MAKER	MODEL
6	KOMATSU	PC(HPV) SERIES
		KPV / KMF/ LPD SERIES
		PC-CONTROL VALVE
7	MITSUBISHI / CATERPILLAR	SPV10/10
		SPK10/10
		PPS140
		MS SERIES
		MCB SERIES
		AP12 / SBS SERIES
		12G / 14G / 16G / 140G
8	DAIKIN / SAUER SUNDUSTRAND	PVD SERIES
		M / MF SERIES
		VRD SERIES
9	SHIBAURA	MFB / SG SERIES
		HTM SERIES
10	TEIJIN SEIKI	GM SERIES
11	LINDE	HPR SERIES
		BPR SERIES
		B2PV SERIES
12	KAYABA	MAG / MSF SERIES
		PSV2 SERIES
13	LIEBHERR	LPVD SERIES
		LMF SERIES



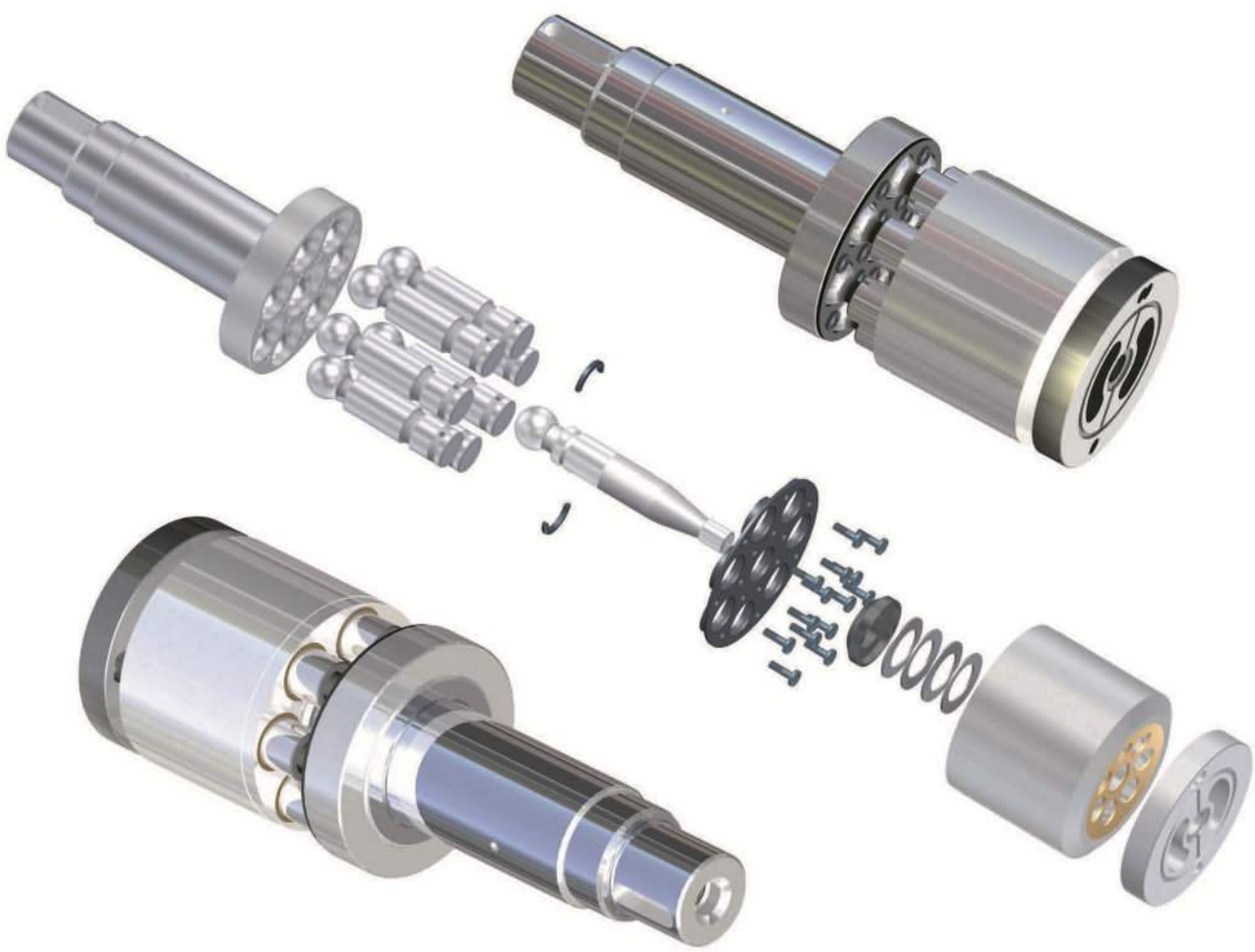

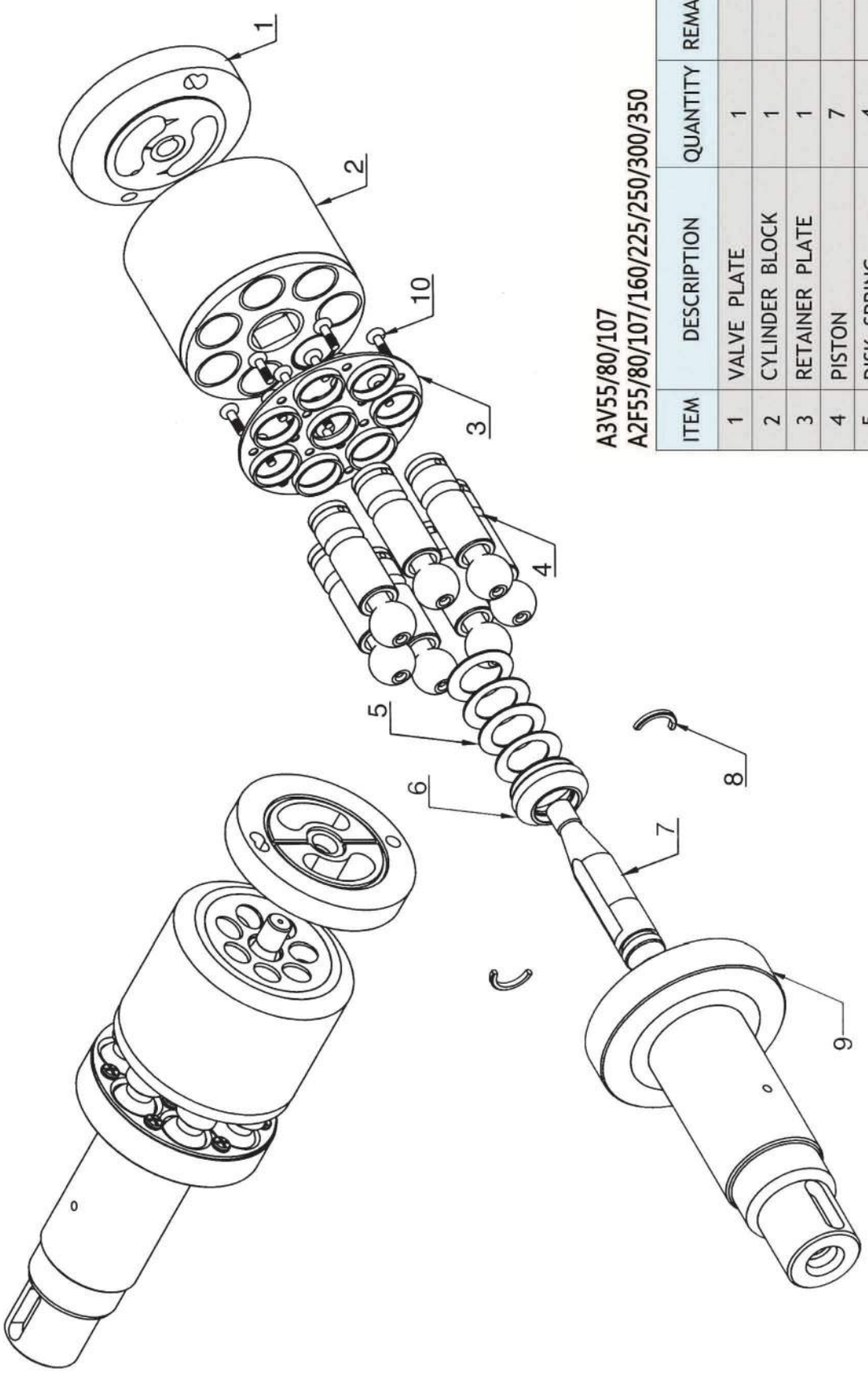

A3V55/80/107
A2F55/80/107/160/225/250/300/350

ITEM	DESCRIPTION	QUANTITY	REMARK
1	VALVE PLATE	1	
2	CYLINDER BLOCK	1	
3	RETAINER PLATE	1	
4	PISTON	7	
5	DISK SPRING	4	
6	DISK SPRING HOLDER	1	
7	CENTER PIN	1	
8	SPACE	2	
9	DRIVE SHAFT	1	
10	SOCKET BOLT	14	

HANDOK HYDRAULIC



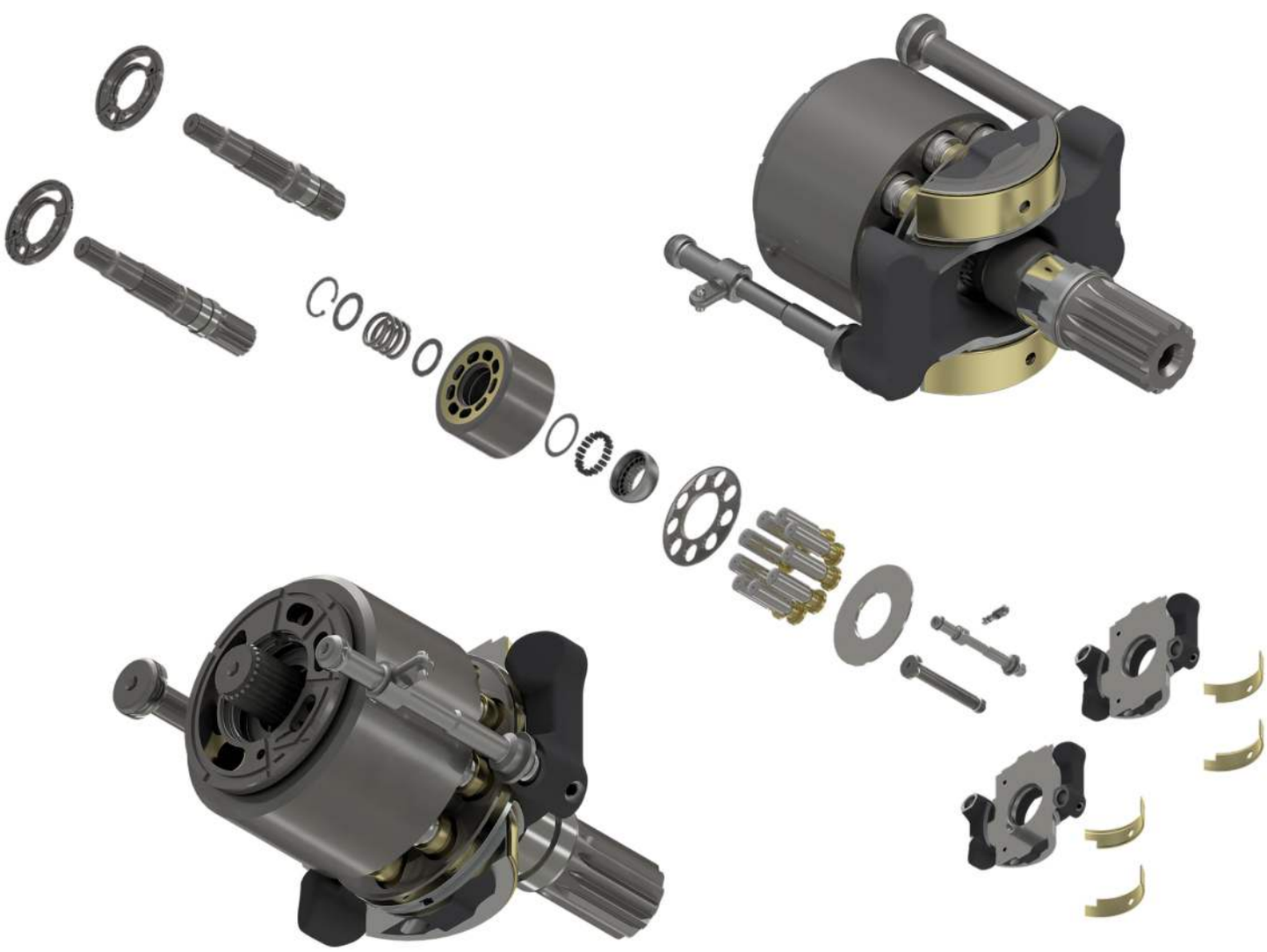

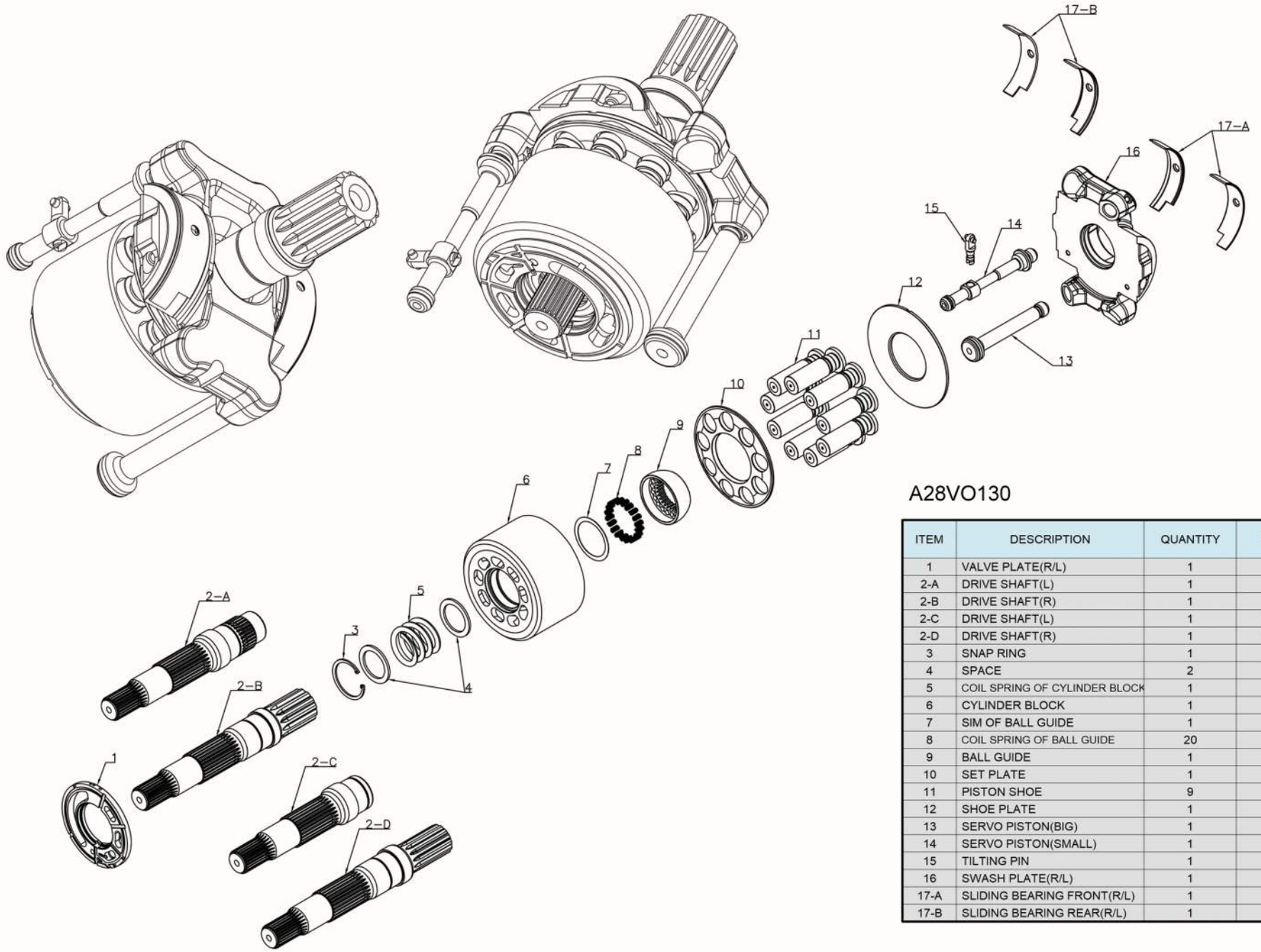

A28VO130

ITEM	DESCRIPTION	QUANTITY	REMARK
1	VALVE PLATE(R/L)	1	
2-A	DRIVE SHAFT(L)	1	
2-B	DRIVE SHAFT(R)	1	
2-C	DRIVE SHAFT(L)	1	V90N130
2-D	DRIVE SHAFT(R)	1	V90N130
3	SNAP RING	1	
4	SPACE	2	
5	COIL SPRING OF CYLINDER BLOCK	1	
6	CYLINDER BLOCK	1	
7	SIM OF BALL GUIDE	1	
8	COIL SPRING OF BALL GUIDE	20	
9	BALL GUIDE	1	
10	SET PLATE	1	
11	PISTON SHOE	9	
12	SHOE PLATE	1	
13	SERVO PISTON(BIG)	1	
14	SERVO PISTON(SMALL)	1	
15	TILTING PIN	1	
16	SWASH PLATE(R/L)	1	
17-A	SLIDING BEARING FRONT(R/L)	1	
17-B	SLIDING BEARING REAR(R/L)	1	

HAN DOK HYDRAULIC



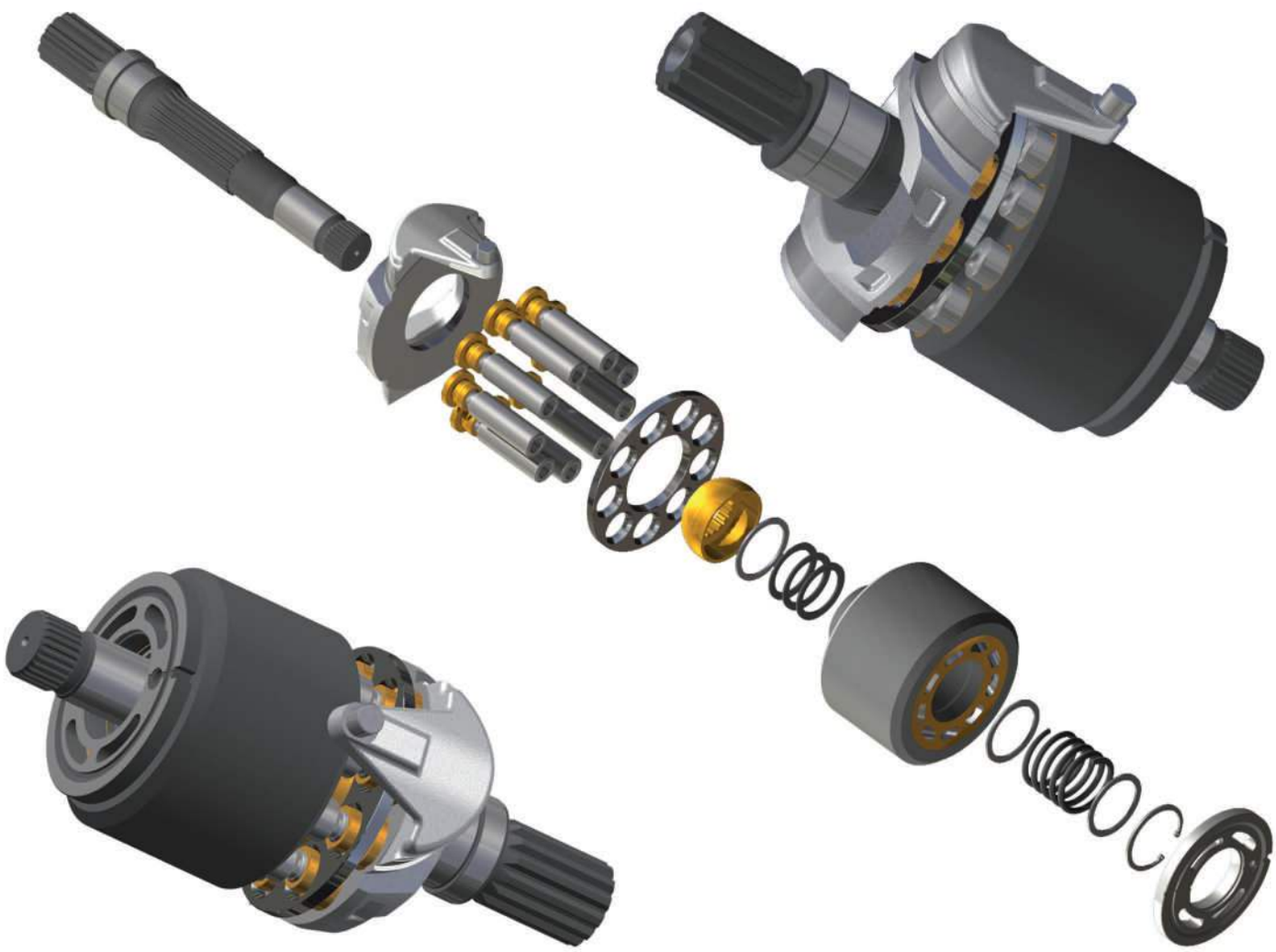

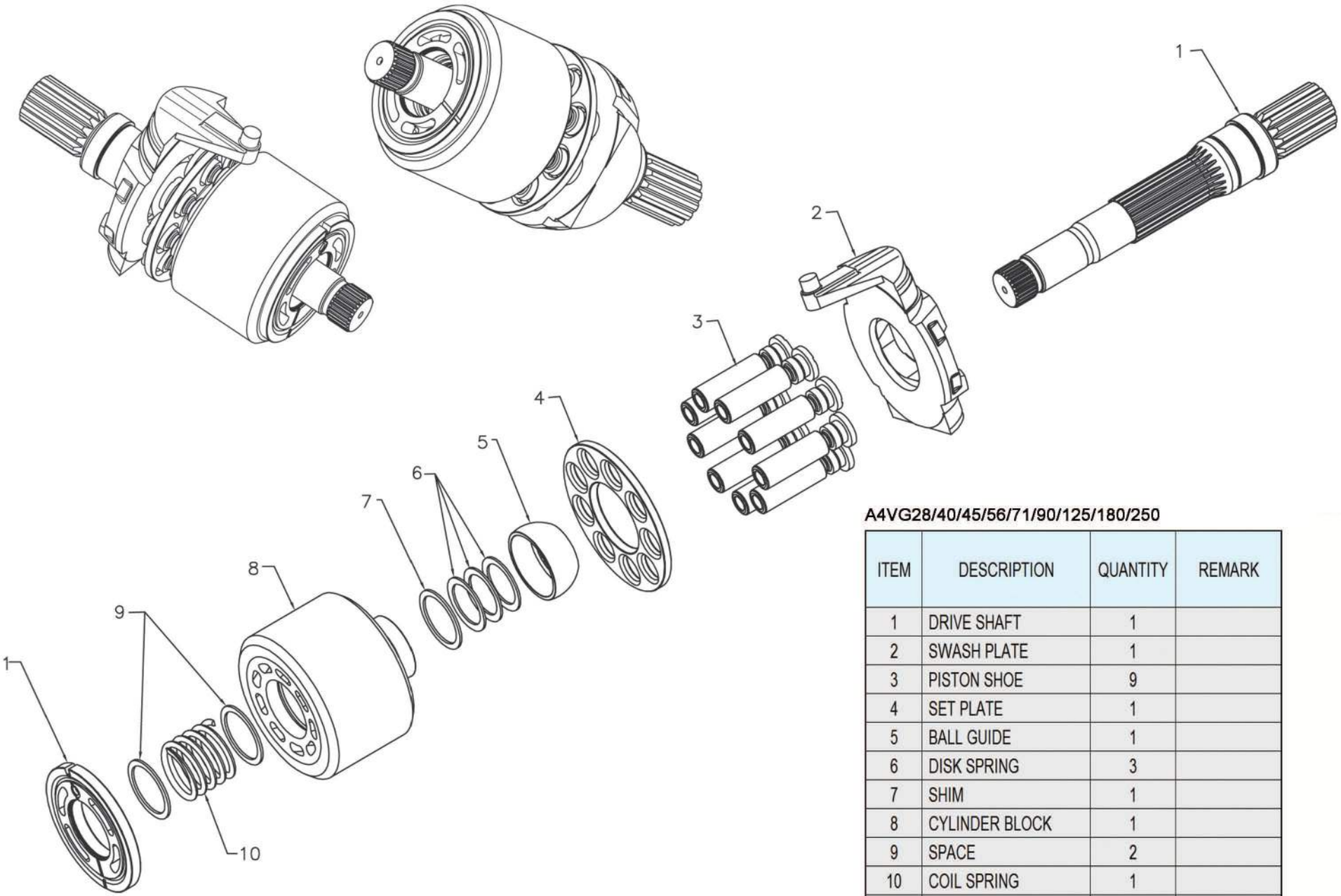

A4VG28/40/45/56/71/90/125/180/250

ITEM	DESCRIPTION	QUANTITY	REMARK
1	DRIVE SHAFT	1	
2	SWASH PLATE	1	
3	PISTON SHOE	9	
4	SET PLATE	1	
5	BALL GUIDE	1	
6	DISK SPRING	3	
7	SHIM	1	
8	CYLINDER BLOCK	1	
9	SPACE	2	
10	COIL SPRING	1	
11	VALVE PLATE	1	

HAN DOK HYDRAULIC



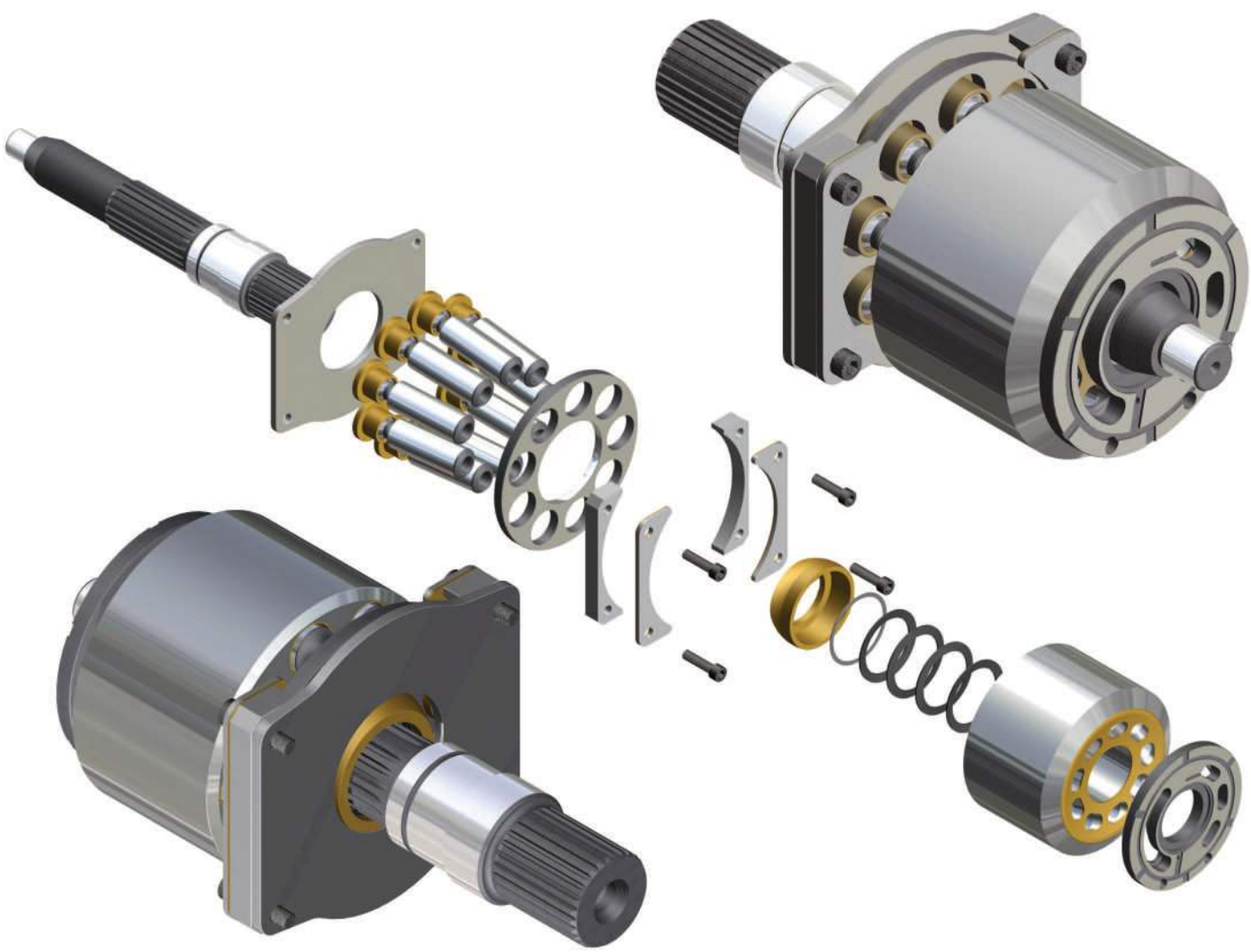

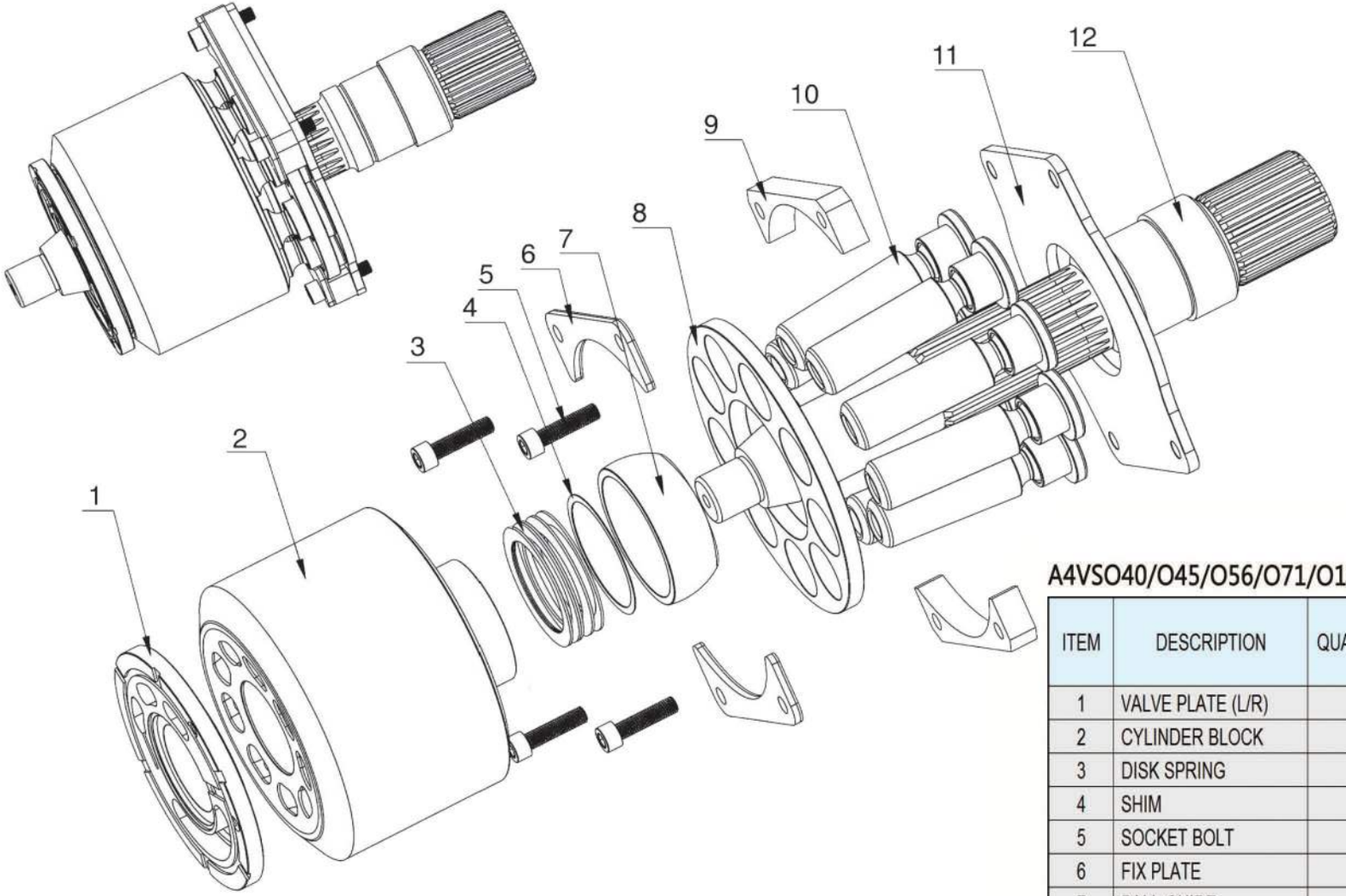

A4VSO40/O45/O56/O71/O125/O180/O250/O355/O500

ITEM	DESCRIPTION	QUANTITY	REMARK
1	VALVE PLATE (L/R)	1	
2	CYLINDER BLOCK	1	
3	DISK SPRING	4	
4	SHIM	1	
5	SOCKET BOLT	4	
6	FIX PLATE	2	
7	BALL GUIDE	1	
8	SET PLATE	1	
9	SPACE	2	
10	PISTON SHOE	9	
11	SHOE PLATE	1	
12	DRIVE SHAFT	1	

HAN DOK HYDRAULIC



IT IS DIFFERENT SHAPE BETWEEN REXROTH TYPE AND UCHIDA TYPE

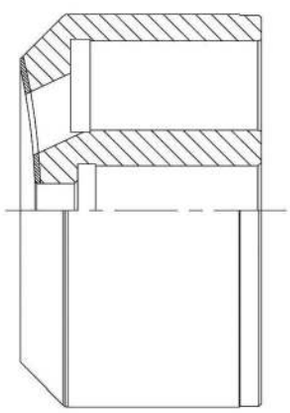

CYLINDER BLOCK

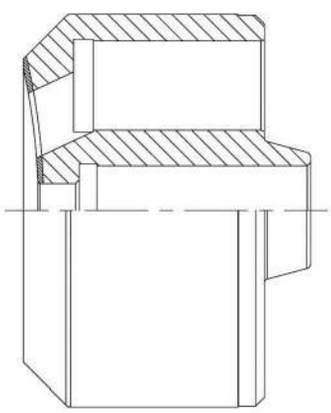

FOR REXROTH-TYPE

FOR UCHIDA-TYPE

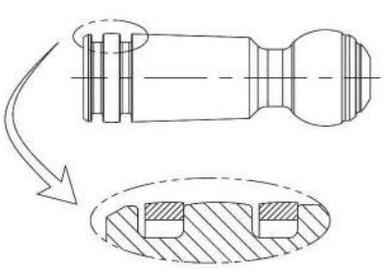

PISTON

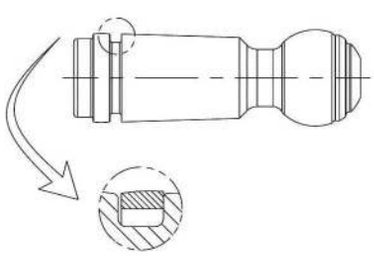

(TWO RING)

(ONE RING)

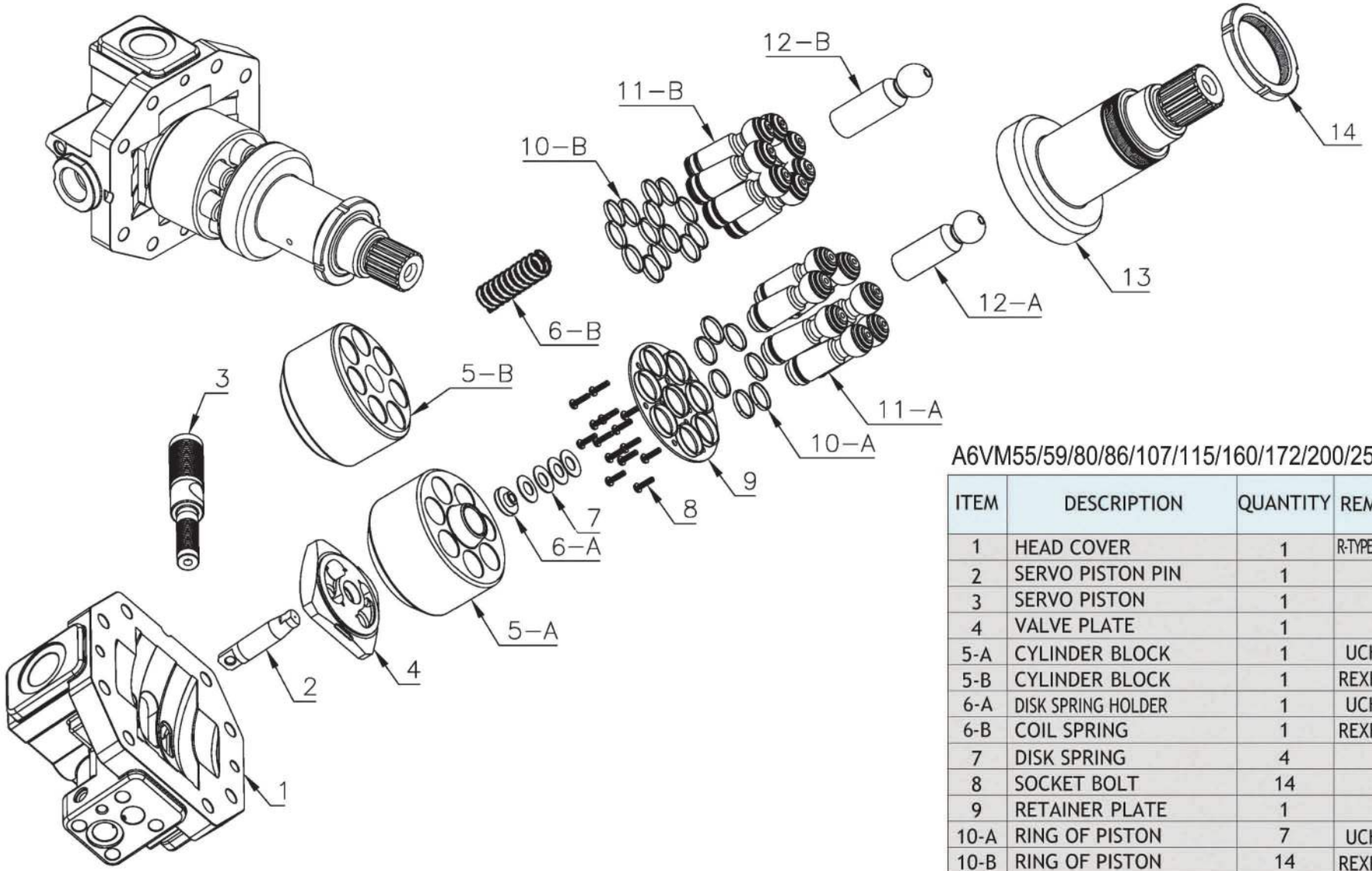

A6VM55/59/80/86/107/115/160/172/200/250

ITEM	DESCRIPTION	QUANTITY	REMARK
1	HEAD COVER	1	R-TYPE, U-TYPE
2	SERVO PISTON PIN	1	
3	SERVO PISTON	1	
4	VALVE PLATE	1	
5-A	CYLINDER BLOCK	1	UCHIDA
5-B	CYLINDER BLOCK	1	REXROTH
6-A	DISK SPRING HOLDER	1	UCHIDA
6-B	COIL SPRING	1	REXROTH
7	DISK SPRING	4	
8	SOCKET BOLT	14	
9	RETAINER PLATE	1	
10-A	RING OF PISTON	7	UCHIDA
10-B	RING OF PISTON	14	REXROTH
11-A	PISTON (ONE RING)	7	UCHIDA
11-B	PISTON (TWO RING)	7	REXROTH
12-A	CENTER PIN (DISK)	1	
12-B	CENTER PIN (COIL)	1	
13	DRIVE SHAFT	1	
14	LOCK NUT	1	

HAN DOK HYDRAULIC



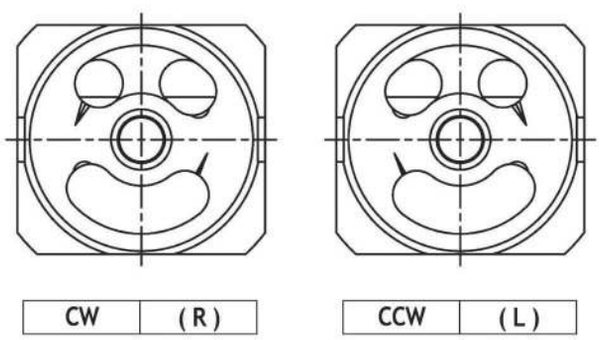

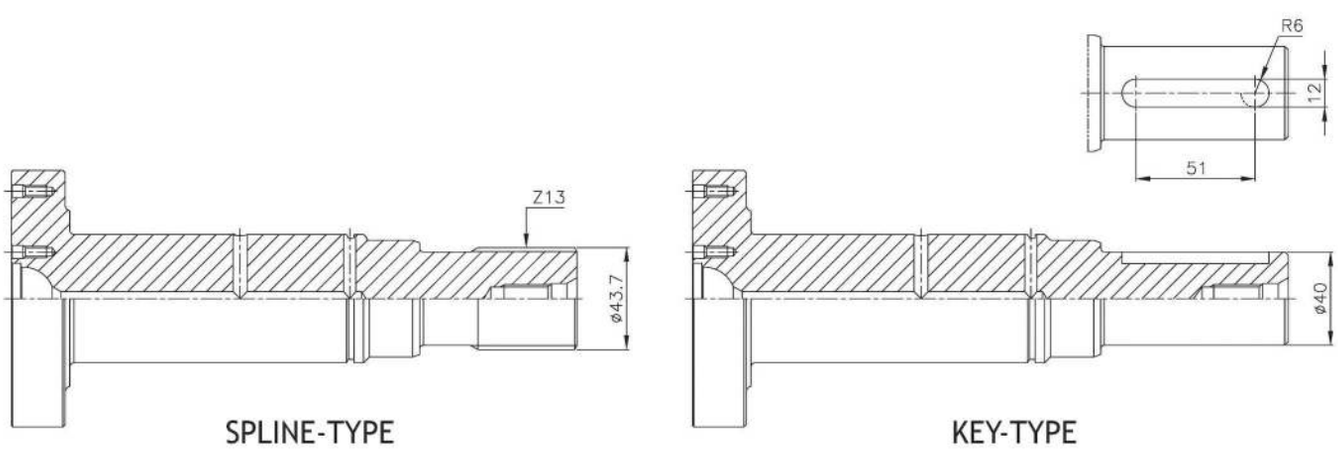

IT IS DIFFERENT SHAPE BETWEEN KEY TYPE AND SPLINE TYPE

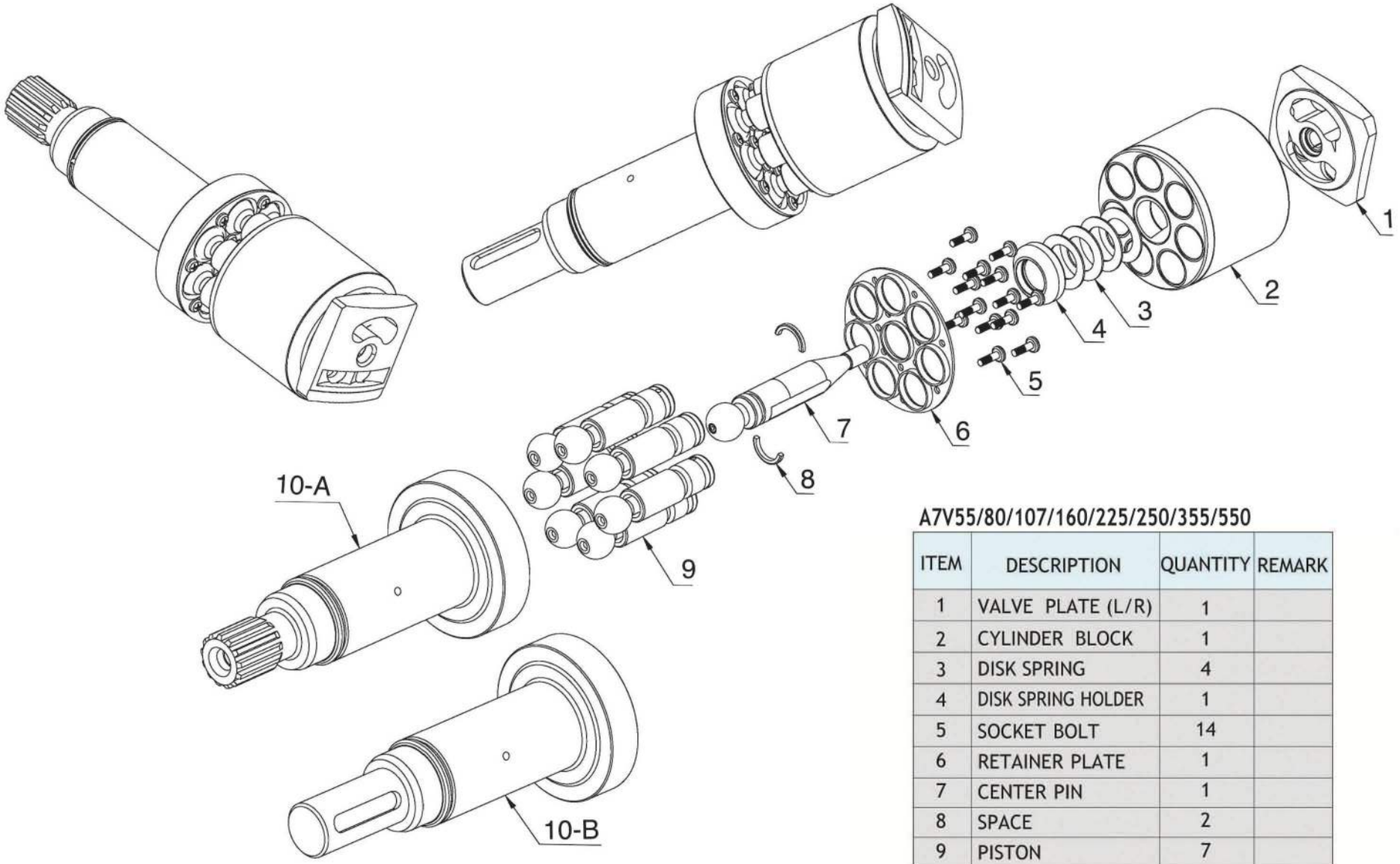

A7V55/80/107/160/225/250/355/550

ITEM	DESCRIPTION	QUANTITY	REMARK
1	VALVE PLATE (L/R)	1	
2	CYLINDER BLOCK	1	
3	DISK SPRING	4	
4	DISK SPRING HOLDER	1	
5	SOCKET BOLT	14	
6	RETAINER PLATE	1	
7	CENTER PIN	1	
8	SPACE	2	
9	PISTON	7	
10-A	DRIVE SHAFT(SPLINE)	1	
10-B	DRIVE SHAFT(KEY)	1	

HAN DOK HYDRAULIC



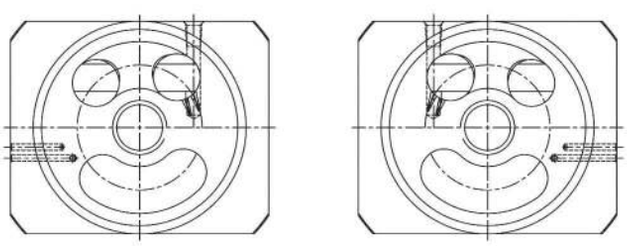

IT IS DIFFERENT WITH VALVE PLATE

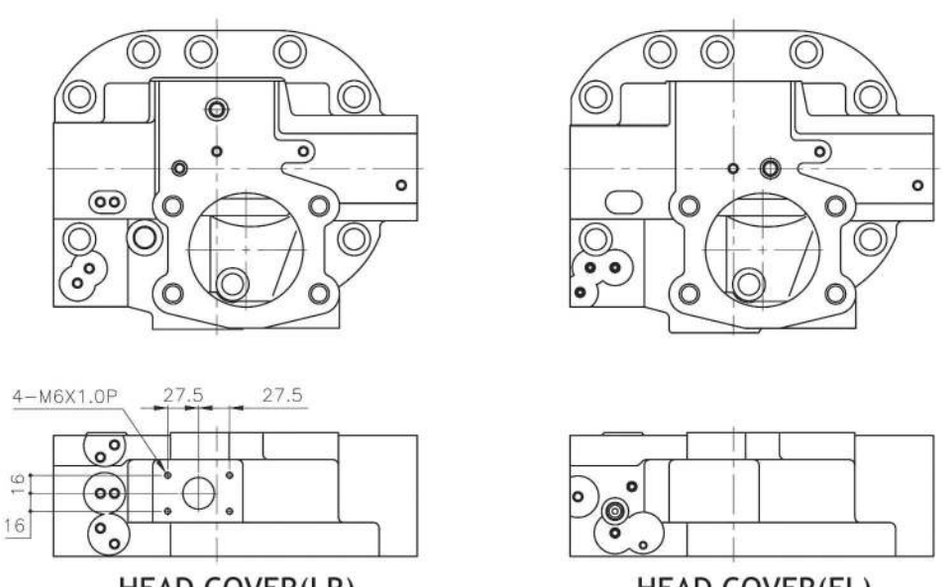

HEAD COVER(LR)

HEAD COVER(EL)

IT IS DIFFERENT SHAPE OF HEAD COVER LR TYPE AND EL TYPE

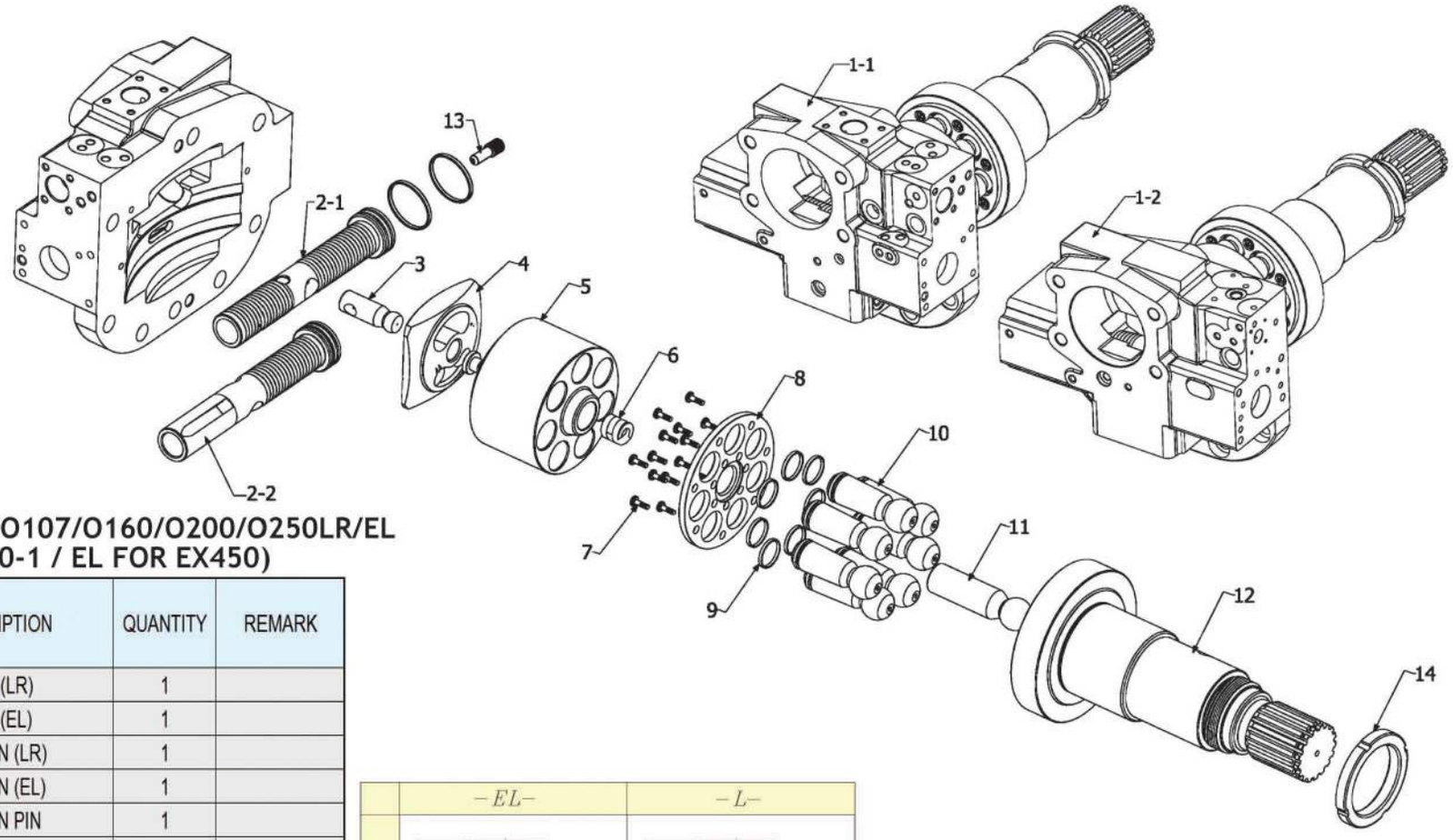

A7VO55/O80/O107/O160/O200/O250LR/EL
(LR FOR EX400-1 / EL FOR EX450)

ITEM	DESCRIPTION	QUANTITY	REMARK
1-1	HEAD COVER (LR)	1	
1-2	HEAD COVER (EL)	1	
2-1	SERVO PISTON (LR)	1	
2-2	SERVO PISTON (EL)	1	
3	SERVO PISTON PIN	1	
4	VALVE PLATE (L/R)	1	
5	CYLINDER BLOCK	1	
6	COIL SPRING	1	
7	SOCKET BOLT	14	
8	RETAINER PLATE	1	
9	RING OF PISTON	7	
10	PISTON	7	
11	CENTER PIN	1	
12	DRIVE SHAFT	1	
13	SERVO PISTON GUIDE PIN	1	
14	LOCK NUT	1	

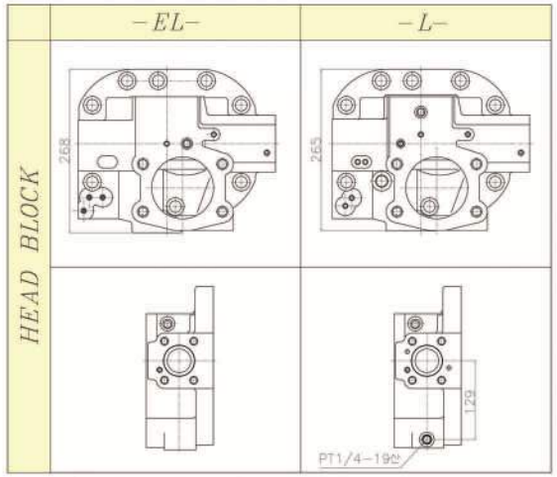

HAN DOK HYDRAULIC

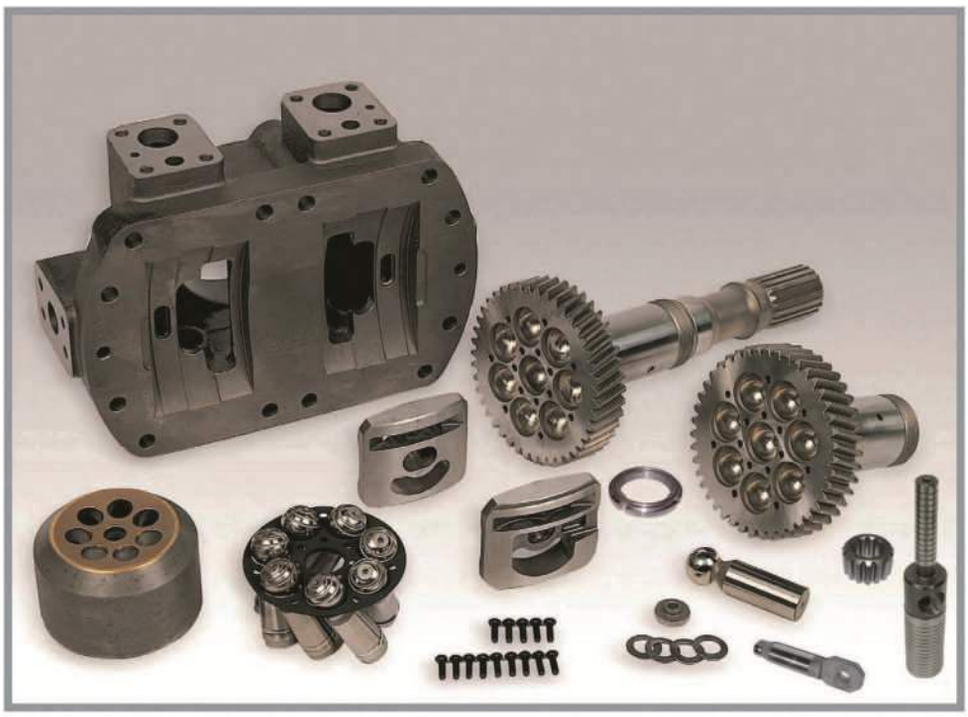

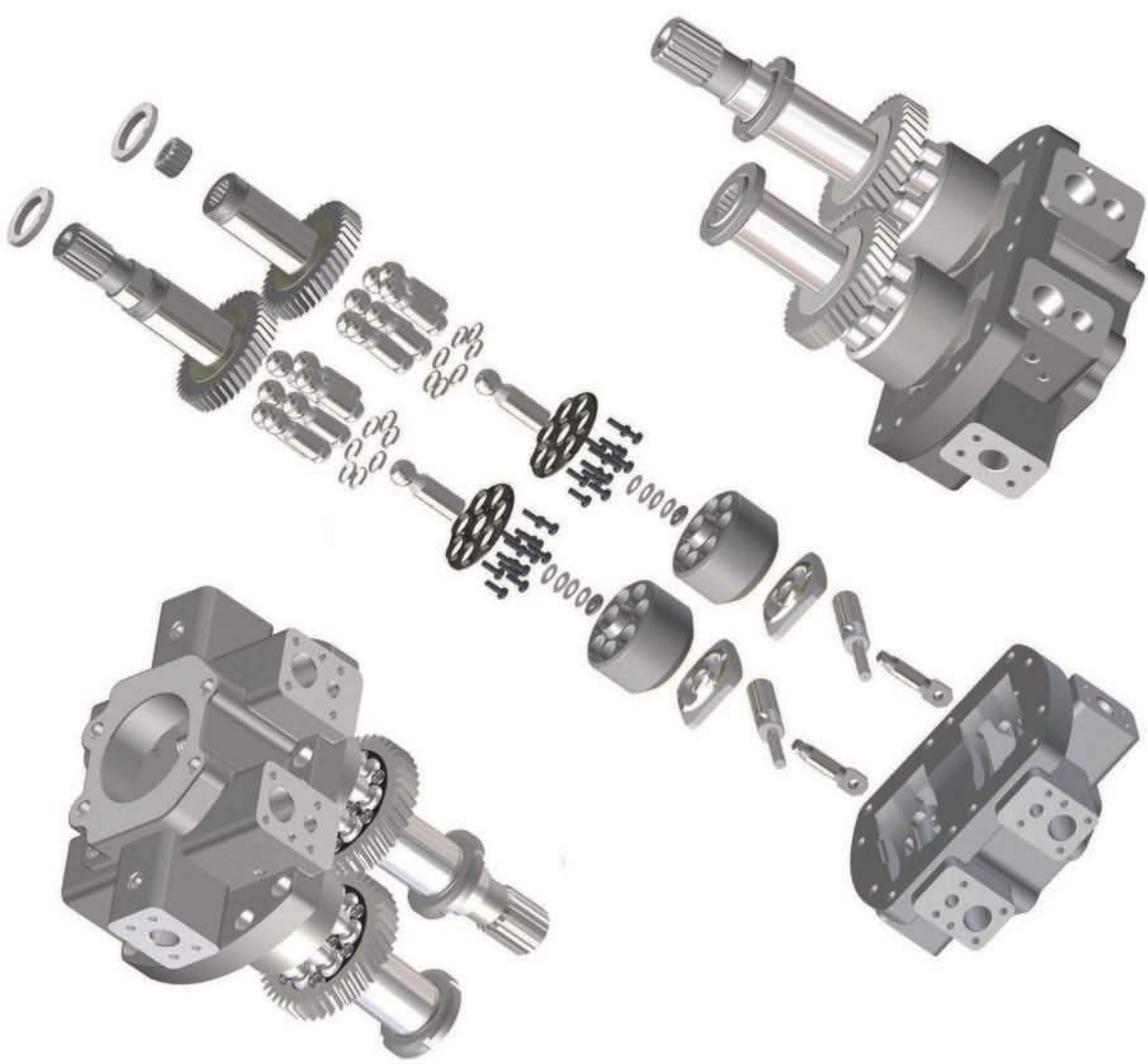

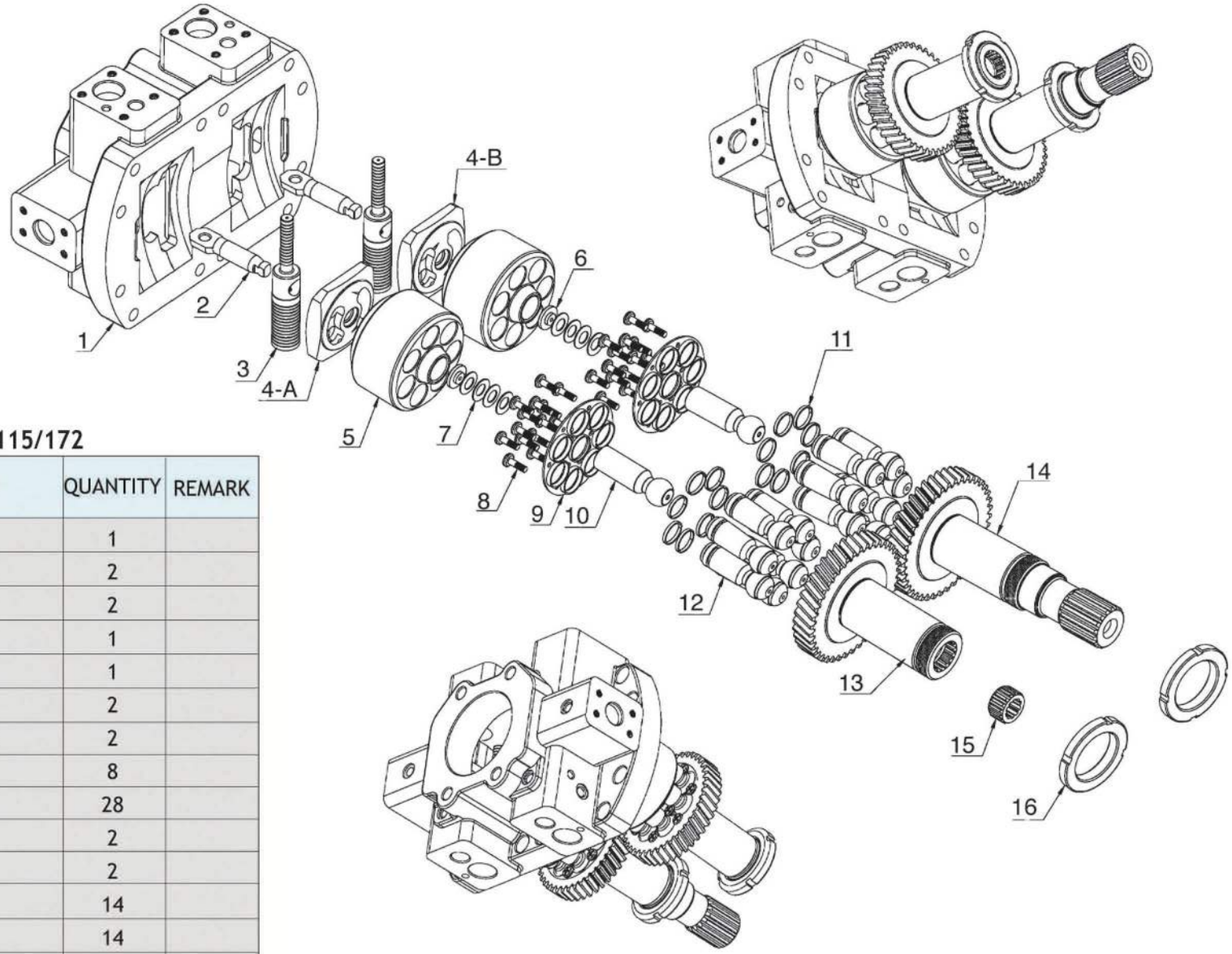

A8V55/59/80/86/107/115/172

ITEM	DESCRIPTION	QUANTITY	REMARK
1	HEAD COVER	1	
2	SERVO PISTON PIN	2	
3	SERVO PISTON	2	
4-A	VALVE PLATE (L)	1	
4-B	VALVE PLATE (R)	1	
5	CYLINDER BLOCK	2	
6	DISK SPRING HOLDER	2	
7	DISK SPRING	8	
8	SOCKET BOLT	28	
9	RETAINER PLATE	2	
10	CENTER PIN	2	
11	RING OF PISTON	14	
12	PISTON	14	
13	DRIVE SHAFT(L)	1	
14	DRIVE SHAFT(R)	1	
15	COUPLING	1	
16	LOCK NUT	2	

HAN DOK HYDRAULIC

A8V (SR1R) SERIES



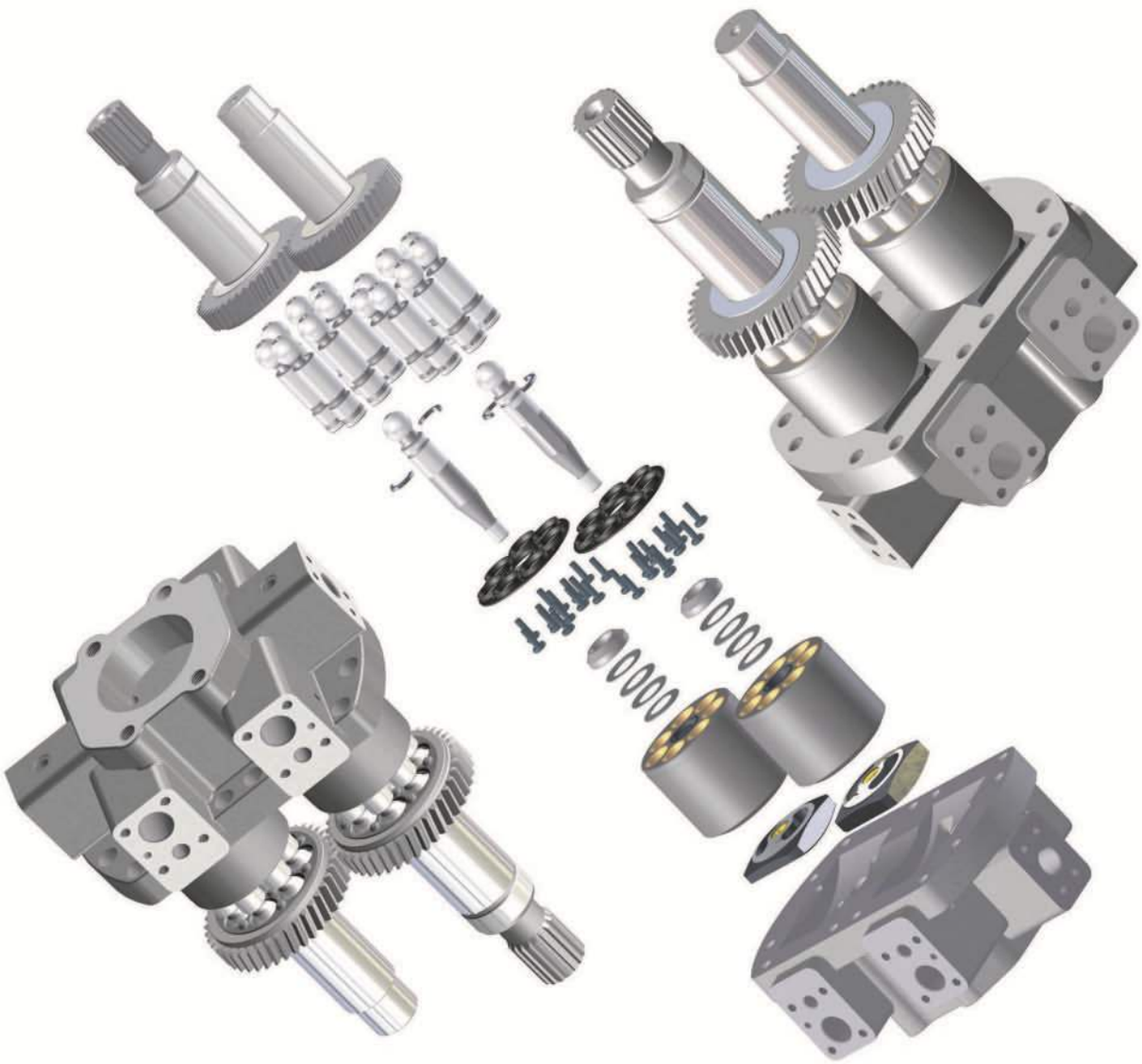

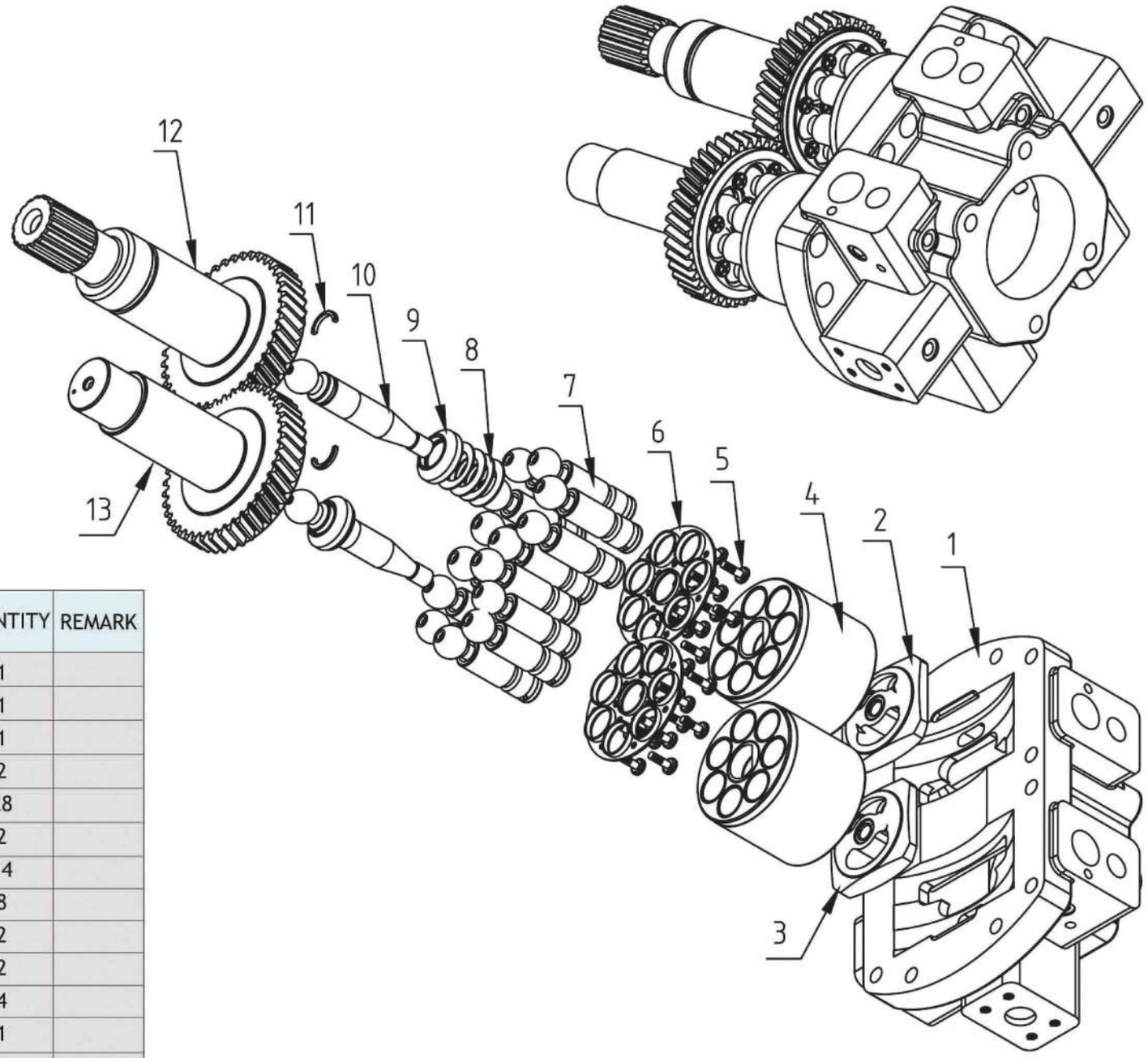

A8V55/80/107/160SR1R

ITEM	DESCRIPTION	QUANTITY	REMARK
1	HEAD COVER	1	
2	VALVE PLATE (R)	1	
3	VALVE PLATE (L)	1	
4	CYLINDER BLOCK	2	
5	SOCKET BOLT	28	
6	RETAINER PLATE	2	
7	PISTON	14	
8	DISK SPRING	8	
9	DISK SPRING HOLDER	2	
10	CENTER PIN	2	
11	SPACE	4	
12	DRIVE SHAFT (R)	1	
13	DRIVE SHAFT (L)	1	

HAN DOK HYDRAULIC

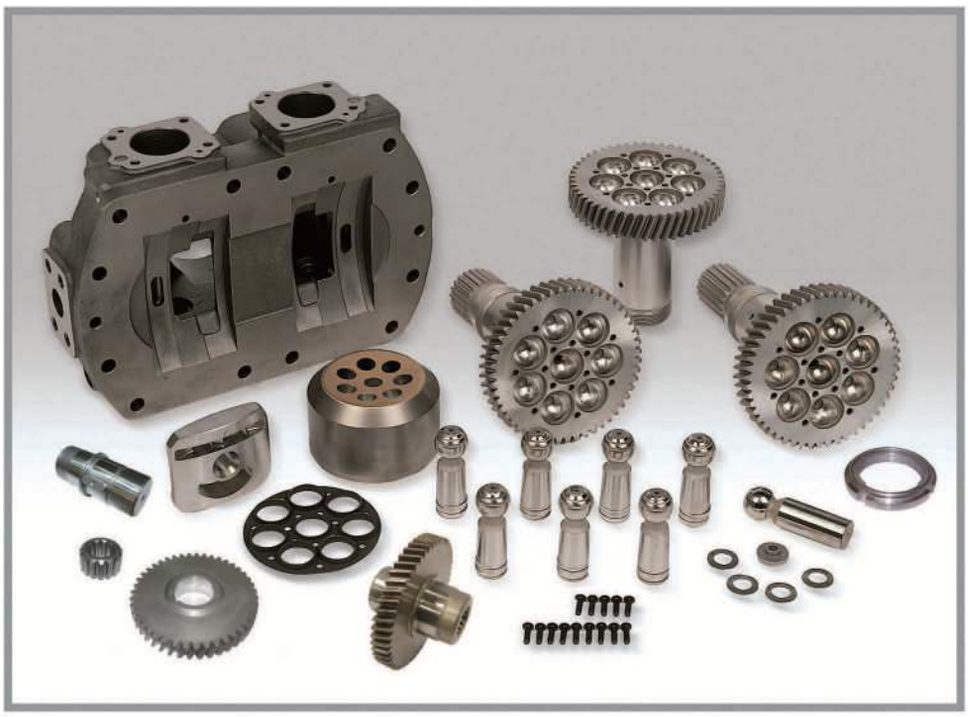

IT IS DIFFERENT SHAPE BETWEEN
A8VO200(CAT TYPE) AND A8VO200(DX TYPE)

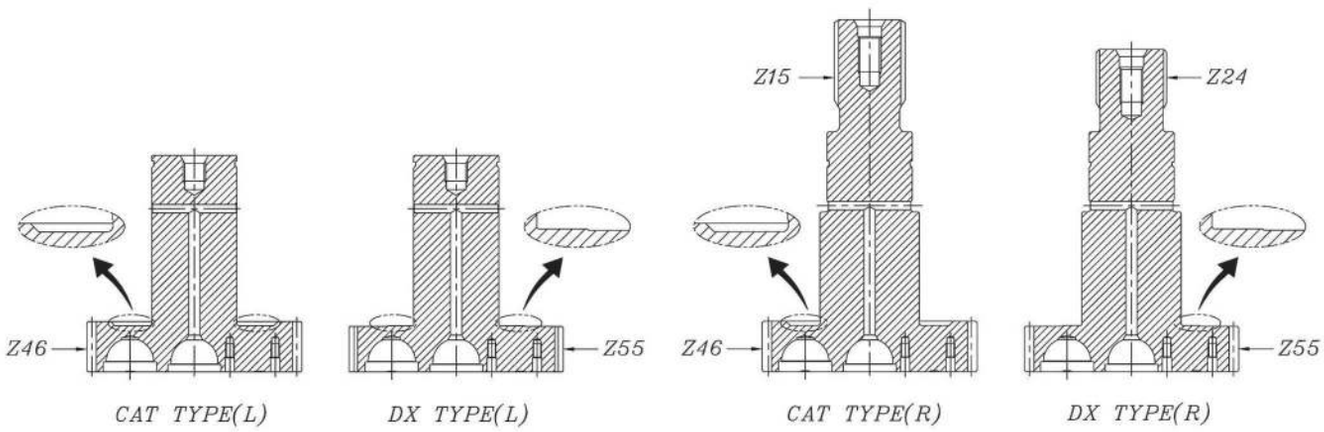

CAT TYPE-16T

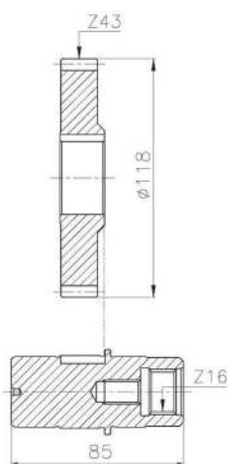

FIAT TYPE-13T

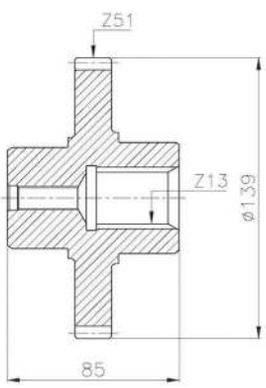

FIAT TYPE-14T

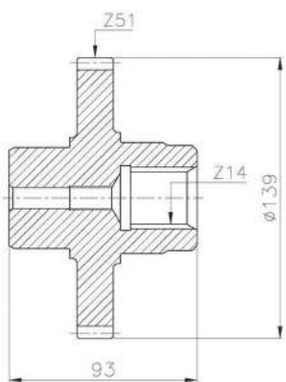

IT IS DIFFERENT IDLE GEAR FOR A8VO107

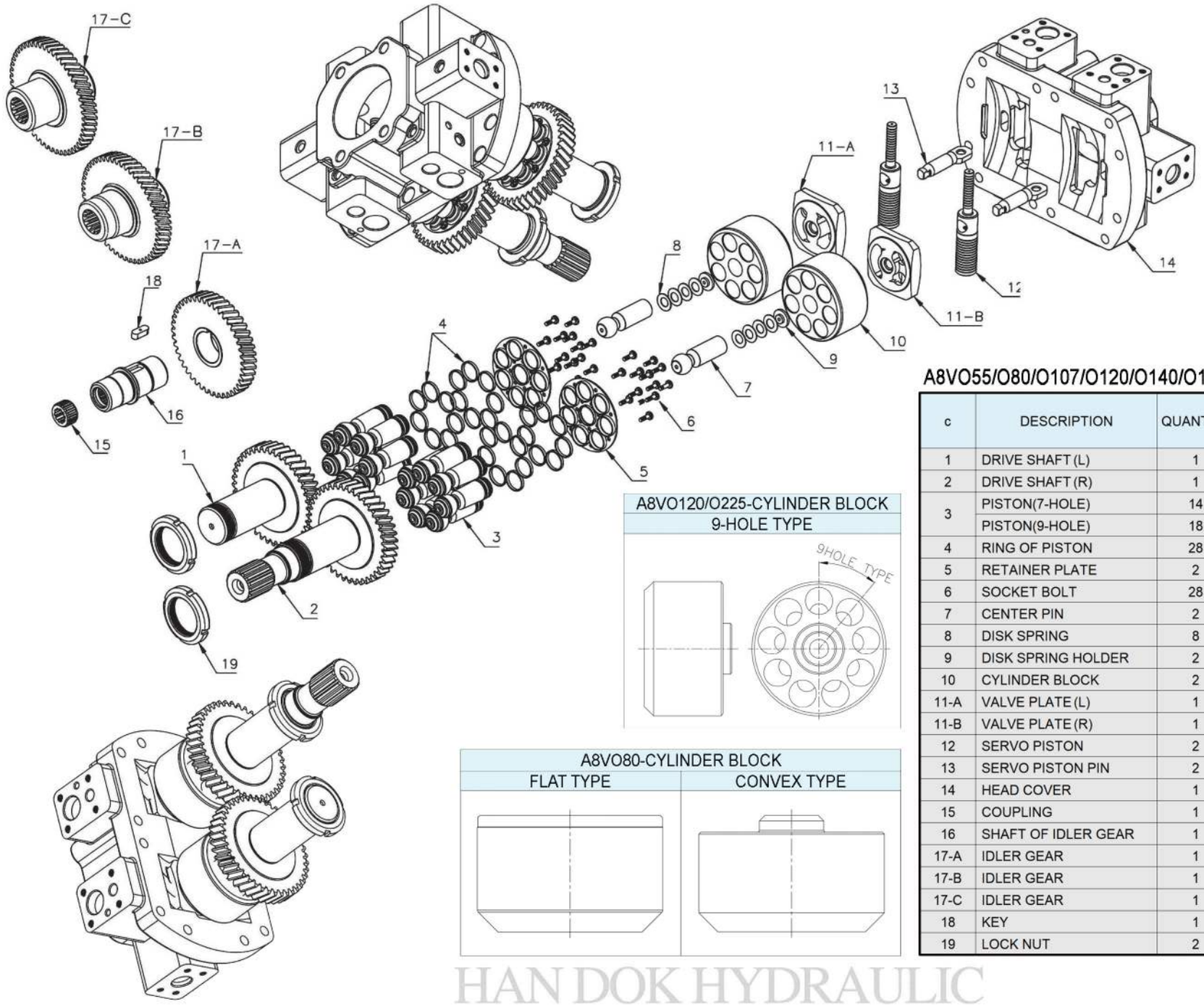

A8VO120/O225-CYLINDER BLOCK
9-HOLE TYPE

A8VO80-CYLINDER BLOCK

FLAT TYPE	CONVEX TYPE

A8VO55/O80/O107/O120/O140/O160/O200/O225

c	DESCRIPTION	QUANTITY	REMARK
1	DRIVE SHAFT (L)	1	
2	DRIVE SHAFT (R)	1	
3	PISTON(7-HOLE)	14	
	PISTON(9-HOLE)	18	
4	RING OF PISTON	28	
5	RETAINER PLATE	2	
6	SOCKET BOLT	28	
7	CENTER PIN	2	
8	DISK SPRING	8	
9	DISK SPRING HOLDER	2	
10	CYLINDER BLOCK	2	
11-A	VALVE PLATE (L)	1	
11-B	VALVE PLATE (R)	1	
12	SERVO PISTON	2	
13	SERVO PISTON PIN	2	
14	HEAD COVER	1	
15	COUPLING	1	
16	SHAFT OF IDLER GEAR	1	
17-A	IDLER GEAR	1	CAT TYPE
17-B	IDLER GEAR	1	FIAT TYPE-14T
17-C	IDLER GEAR	1	FIAT TYPE-13T
18	KEY	1	
19	LOCK NUT	2	

HAN DOK HYDRAULIC



IT IS DIFFERENT SHAPE BETWEEN A10V40(REXROTH TYPE) AND A10V43(UCHIDA TYPE) OF PARTS.

A10V40(REXROTH TYPE)

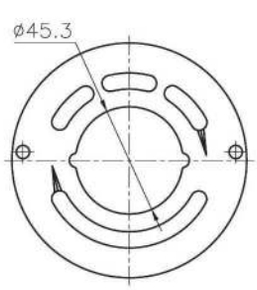	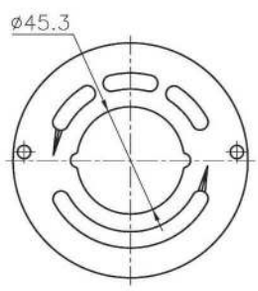	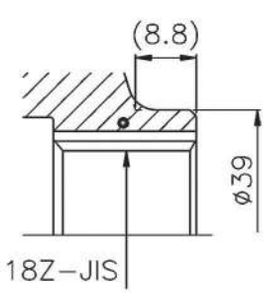	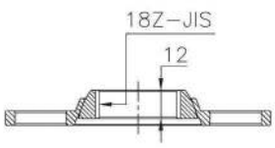
V/PLATE(CCW-L)	V/PLATE(CW-R)	CYLINDER BLOCK	SET PLATE

A10V43(UCHIDA TYPE)

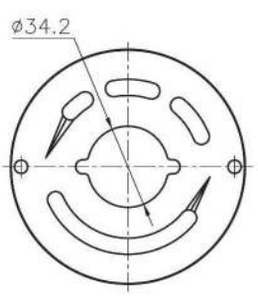	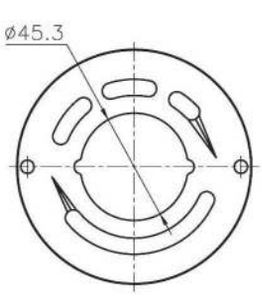	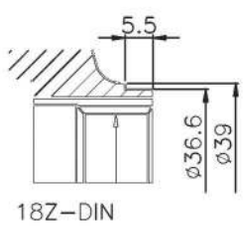	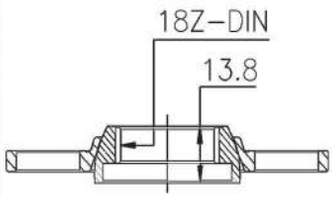
V/PLATE(CCW-L)	V/PLATE(CW-R)	CYLINDER BLOCK	SET PLATE

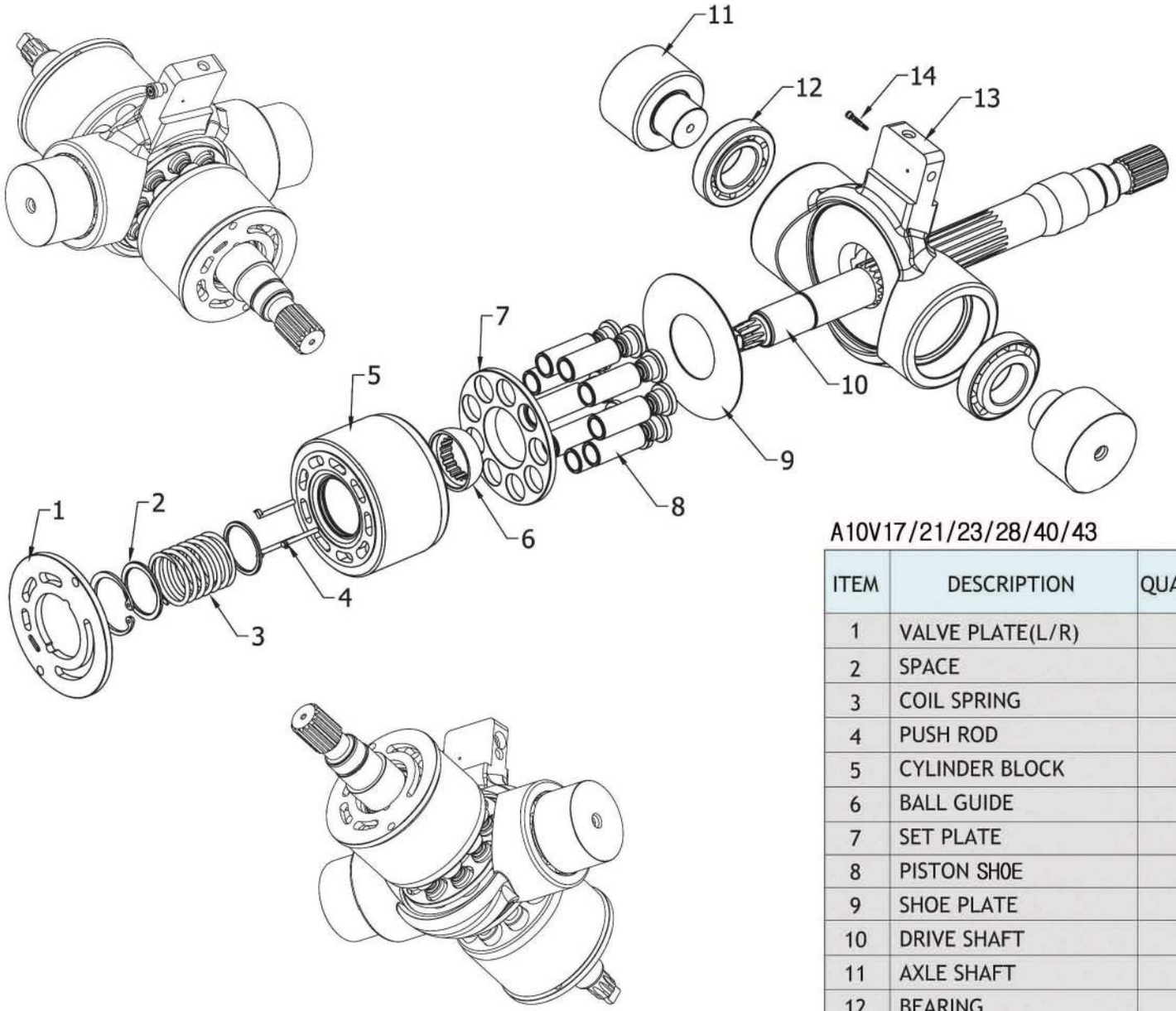

A10V17/21/23/28/40/43

ITEM	DESCRIPTION	QUANTITY	REMARK
1	VALVE PLATE(L/R)	1	
2	SPACE	2	
3	COIL SPRING	1	
4	PUSH ROD	3	
5	CYLINDER BLOCK	1	
6	BALL GUIDE	1	
7	SET PLATE	1	
8	PISTON SH0E	9	
9	SHOE PLATE	1	
10	DRIVE SHAFT	1	
11	AXLE SHAFT	2	
12	BEARING	2	
13	HANGER	1	
14	COMPEN PISTON	1	

HAN DOK HYDRAULIC

A10VO SERIES



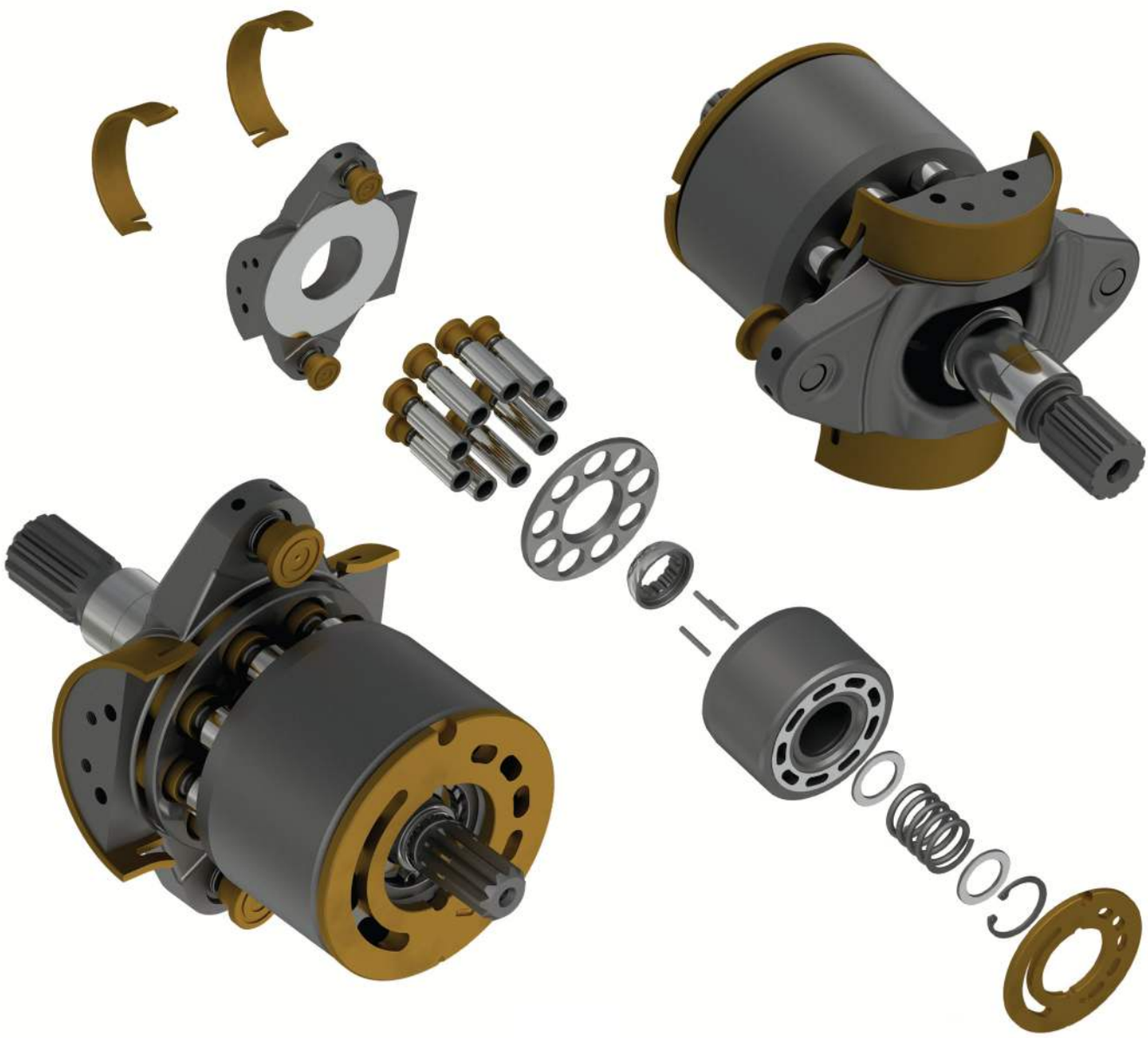

IT IS DIFFEREN SHAPE BETWEEN A10VO28 VALVE PLATE AND A10VO28LR VALVE PLATE

A10VO28			A10VO28LR
REXROTH - SINGLE PUMP TYPE		REXROTH - DOUBLE PUMP TYPE	HITACHI(ZX70) TYPE
VALVE PLATE-L	VALVE PLATE-R	VALVE PLATE-R	VALVE PLATE-R
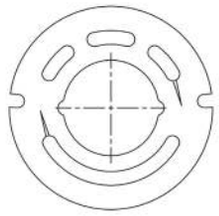	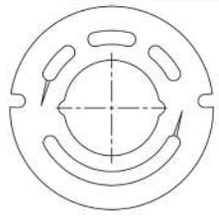	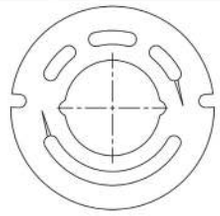	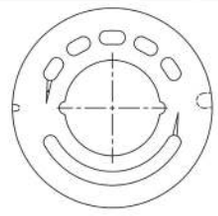

A10VO28/45/60/63/71/74/100/140 FOR REXROTH TYPE

ITEM	DESCRIPTION	QUANTITY	REMARK
1	SLIDING BEARING	2	
2	CAM ROCKER	1	
3	PISTON SHOE	9	
4	SET PLATE	1	
5	BALL GUIDE	1	
6	PIN OF CYLINDER BLOCK	3	
7	CYLINDER BLOCK	1	
8	SPACE	2	
9	COIL SPRING	1	
10	SNAP RING	1	
11	VALVE PLATE	1	

HAN DOK HYDRAULIC

A10VO28LR



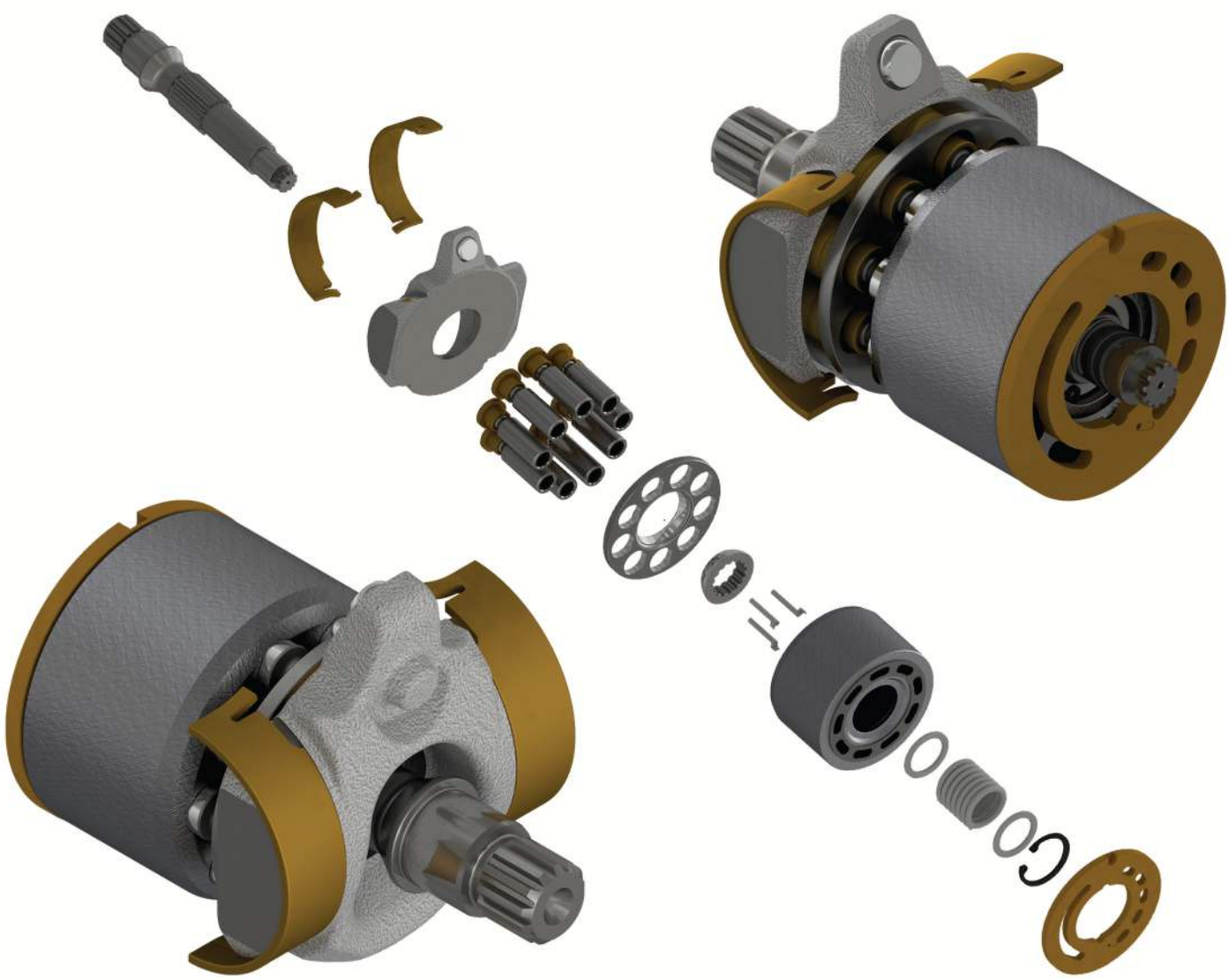

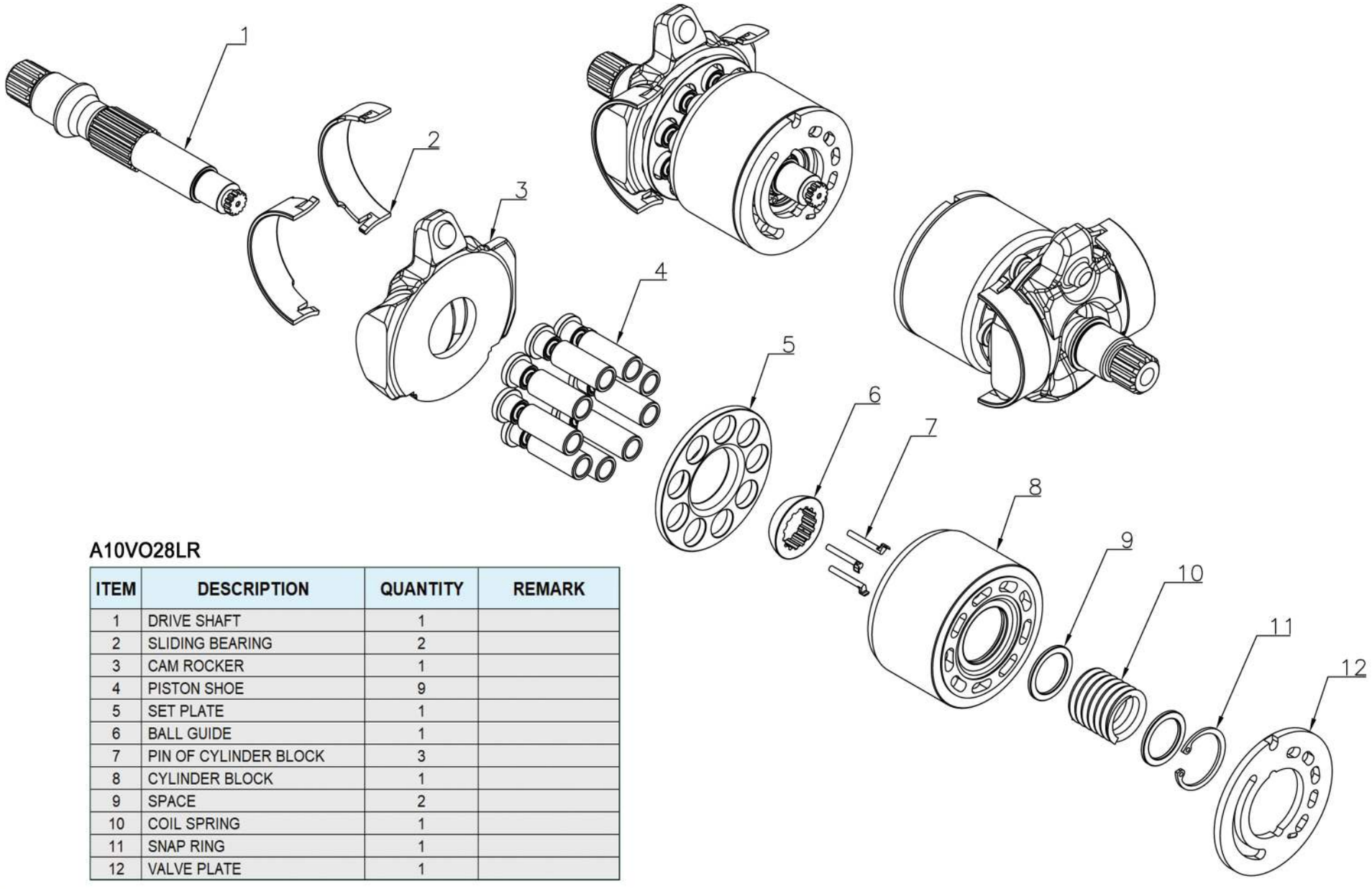

A10VO28LR

ITEM	DESCRIPTION	QUANTITY	REMARK
1	DRIVE SHAFT	1	
2	SLIDING BEARING	2	
3	CAM ROCKER	1	
4	PISTON SHOE	9	
5	SET PLATE	1	
6	BALL GUIDE	1	
7	PIN OF CYLINDER BLOCK	3	
8	CYLINDER BLOCK	1	
9	SPACE	2	
10	COIL SPRING	1	
11	SNAP RING	1	
12	VALVE PLATE	1	

HAN DOK HYDRAULIC



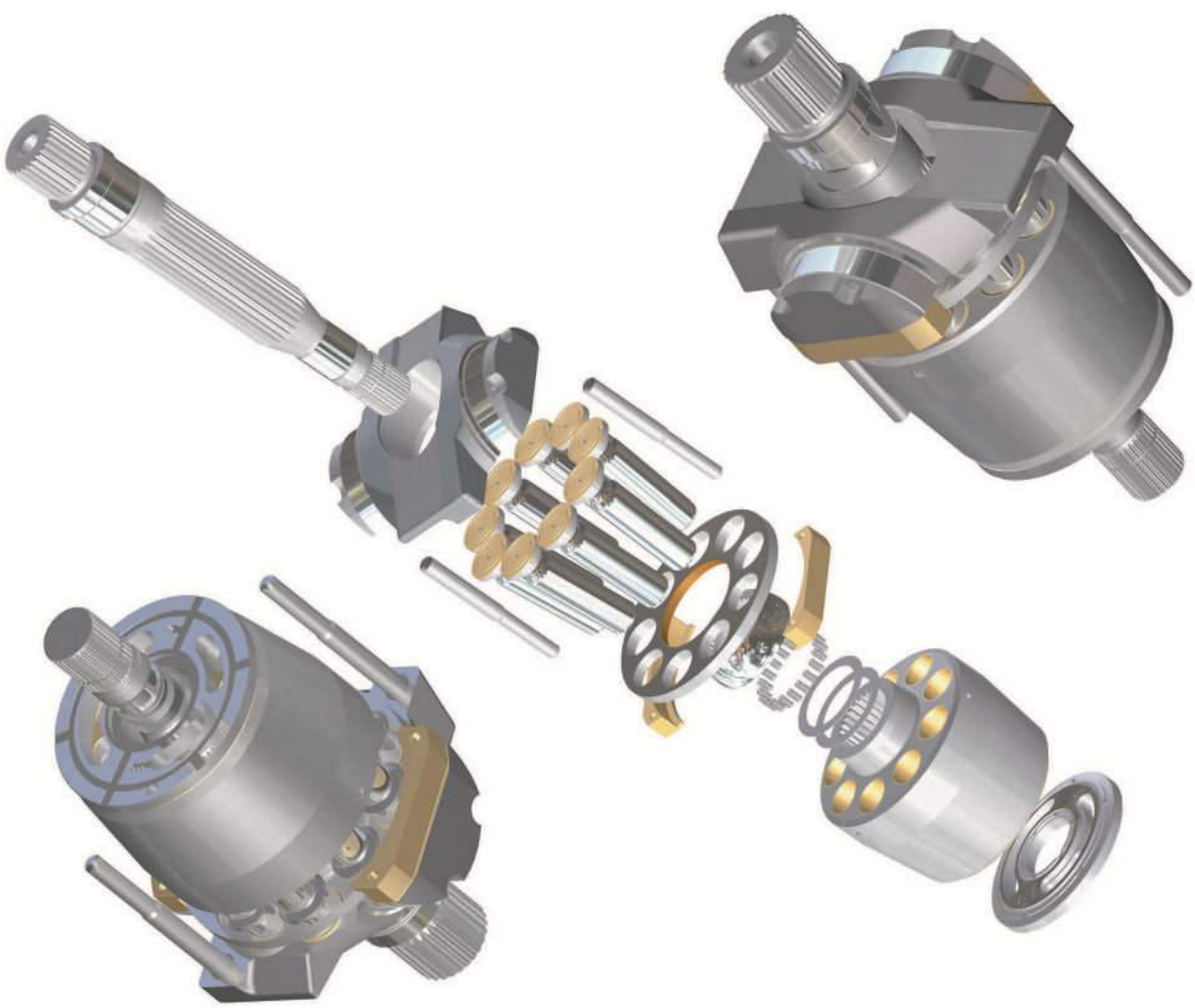

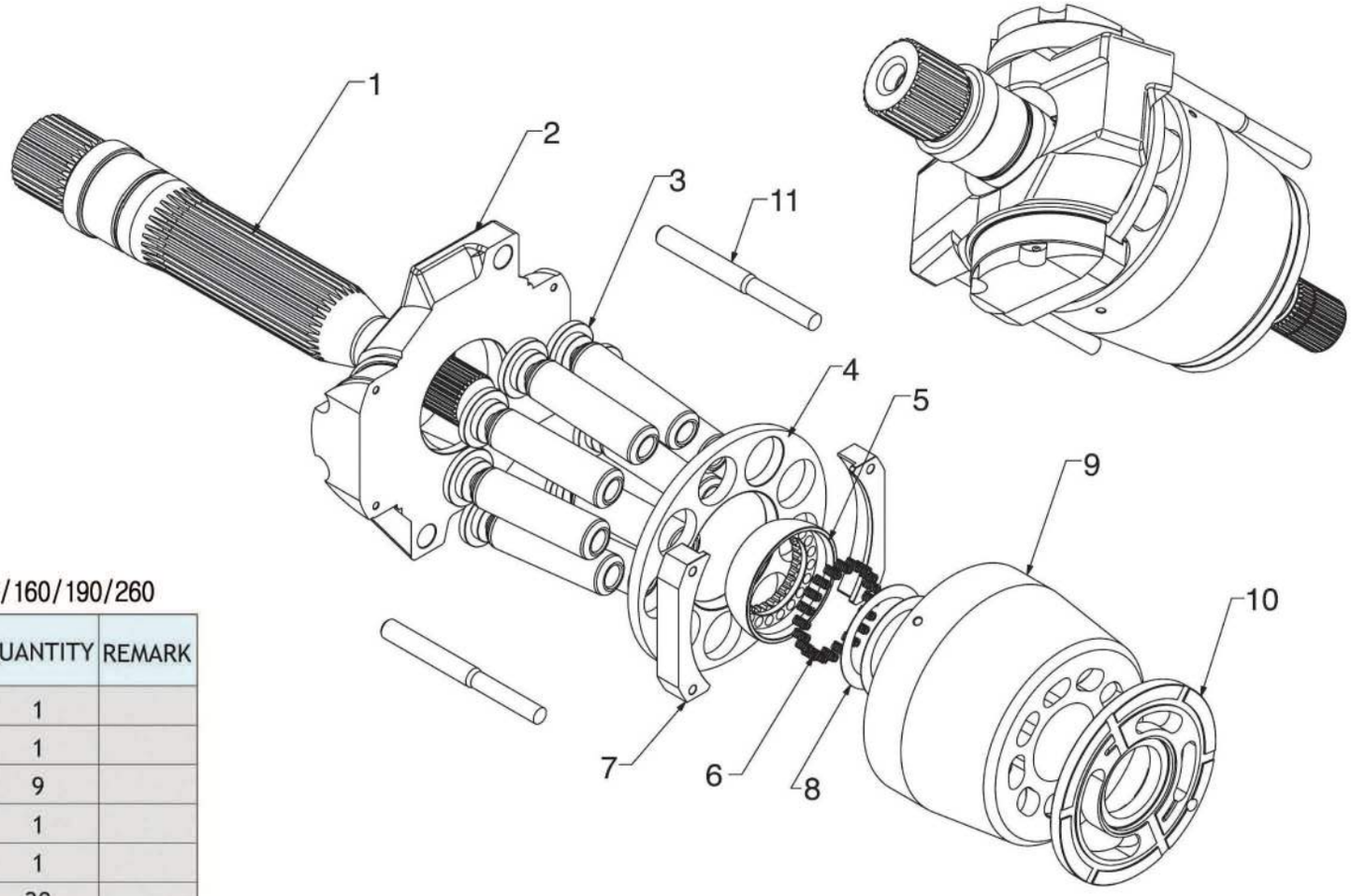

A11VS040/60/75/95/130/145/160/190/260

ITEM	DESCRIPTION	QUANTITY	REMARK
1	DRIVE SHAFT	1	
2	SWASH PLATE	1	
3	PISTON SH0E	9	
4	SET PLATE	1	
5	BALL GUIDE	1	
6	COIL SPRING	20	
7	FIX PLATE	2	
8	SHIM	2	
9	CYLINDER BLOCK	1	
10	VALVE PLATE(L/R)	1	
11	PUSH ROD	2	

HAN DOK HYDRAULIC

AP12(E200B,E320B)



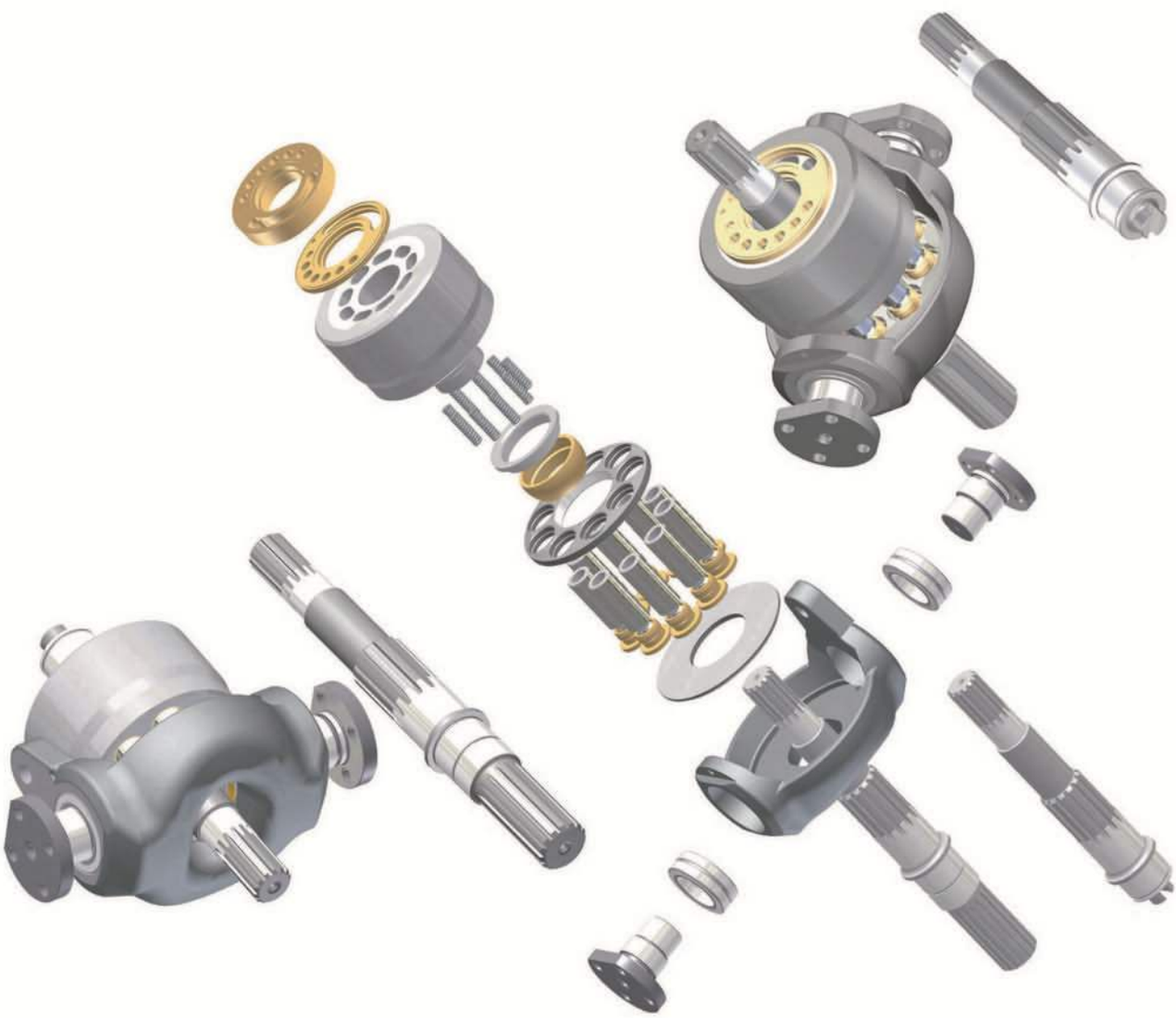

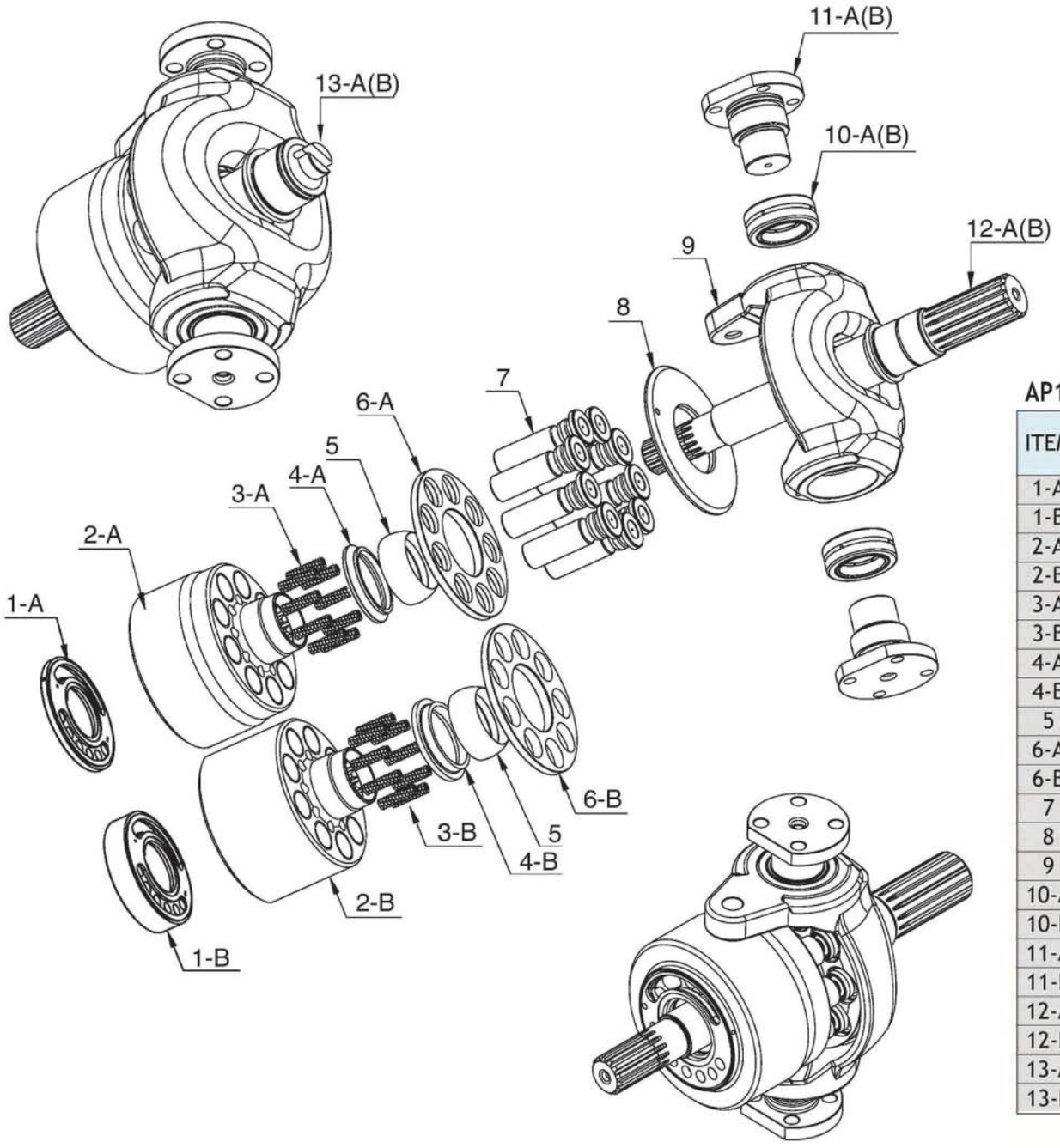

AP12(E200B/E320B)

ITEM	DESCRIPTION	QUANTITY	REMARK
1-A	VALVE PLATE(E320B)(L/R)	1	
1-B	VALVE PLATE(E200B)(L/R)	1	
2-A	CYLINDER BLOCK(E320B)	1	
2-B	CYLINDER BLOCK(E200B)	1	
3-A	COIL SPRING(E320B)	9	
3-B	COIL SPRING(E200B)	9	
4-A	SPACE(E320B)	1	
4-B	SPACE(E200B)	1	
5	BALL GUIDE	1	
6-A	SET PLATE(E320B)	1	
6-B	SET PLATE(E200B)	1	
7	PISTON SHOE	9	
8	SHOE PLATE(E200B/E320B)	1	
9	SWASH PLATE	1	
10-A	BEARING(E320B)	2	
10-B	BEARING(E200B)	2	
11-A	AXLE SHAFT(E320B)	2	(88X50X40)
11-B	AXLE SHAFT(E200B)	2	(84X50X35)
12-A	DRIVE SHAFT-R(E320B)	1	
12-B	DRIVE SHAFT-R(E200B)	1	
13-A	DRIVE SHAFT-L(E320B)	1	
13-B	DRIVE SHAFT-L(E200B)	1	

HAN DOK HYDRAULIC



	AP2D36-TRUNNION TYPE	AP2D36-CRADLE TYPE
SWASH PLATE	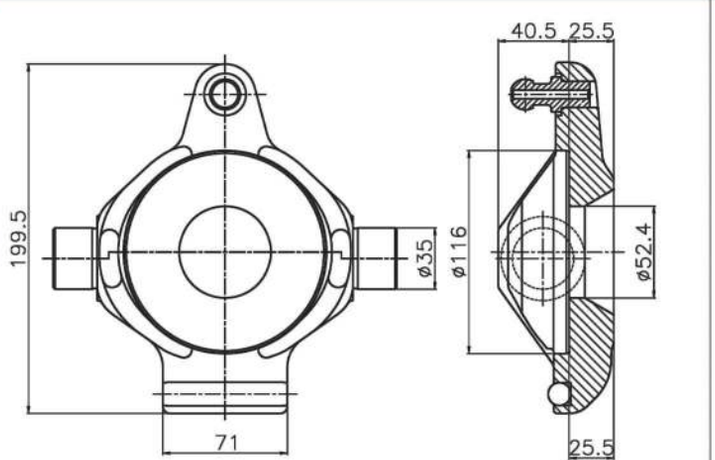	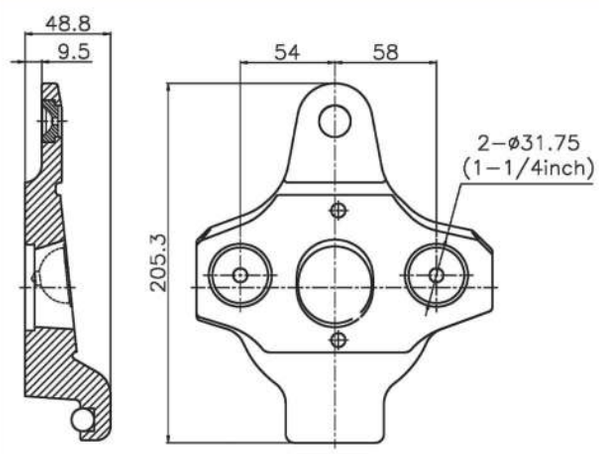

14T	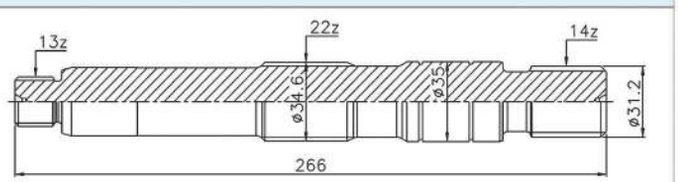
15T	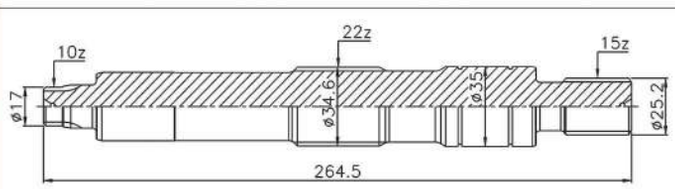

	AP2D36-TRUNNION TYPE	AP2D36-CRADLE TYPE
BALL GUIDE & SET PLATE	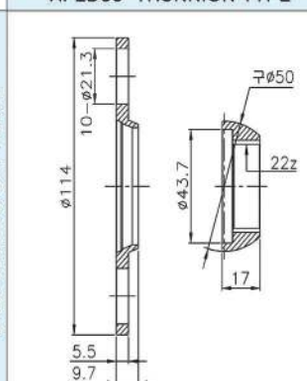	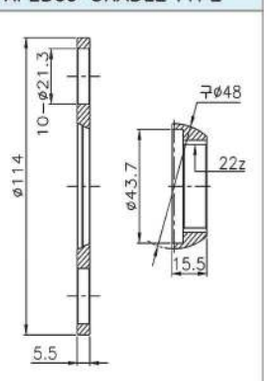

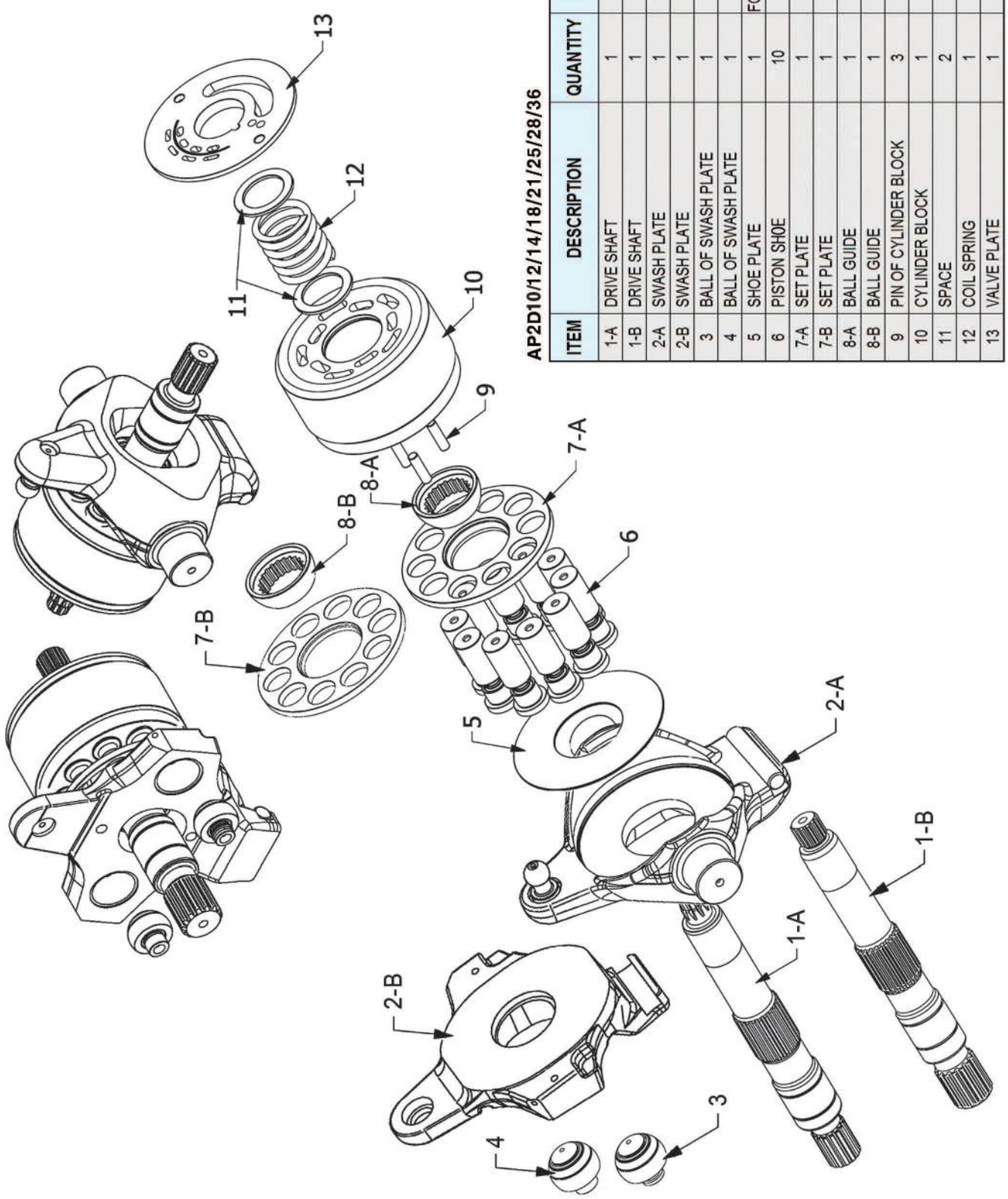

AP2D10/12/14/18/21/25/28/36

ITEM	DESCRIPTION	QUANTITY	REMARK
1-A	DRIVE SHAFT	1	15T
1-B	DRIVE SHAFT	1	14T
2-A	SWASH PLATE	1	TRUNNION
2-B	SWASH PLATE	1	CRADLE
3	BALL OF SWASH PLATE	1	L
4	BALL OF SWASH PLATE	1	R
5	SHOE PLATE	1	FOR TRUNNION
6	PISTON SHOE	10	
7-A	SET PLATE	1	TRUNNION
7-B	SET PLATE	1	CRADLE
8-A	BALL GUIDE	1	TRUNNION
8-B	BALL GUIDE	1	CRADLE
9	PIN OF CYLINDER BLOCK	3	
10	CYLINDER BLOCK	1	
11	SPACE	2	
12	COIL SPRING	1	
13	VALVE PLATE	1	

HAN DOK HYDRAULIC

AP5S53/67(EX100-2/3/5, EX120-2/3/5)

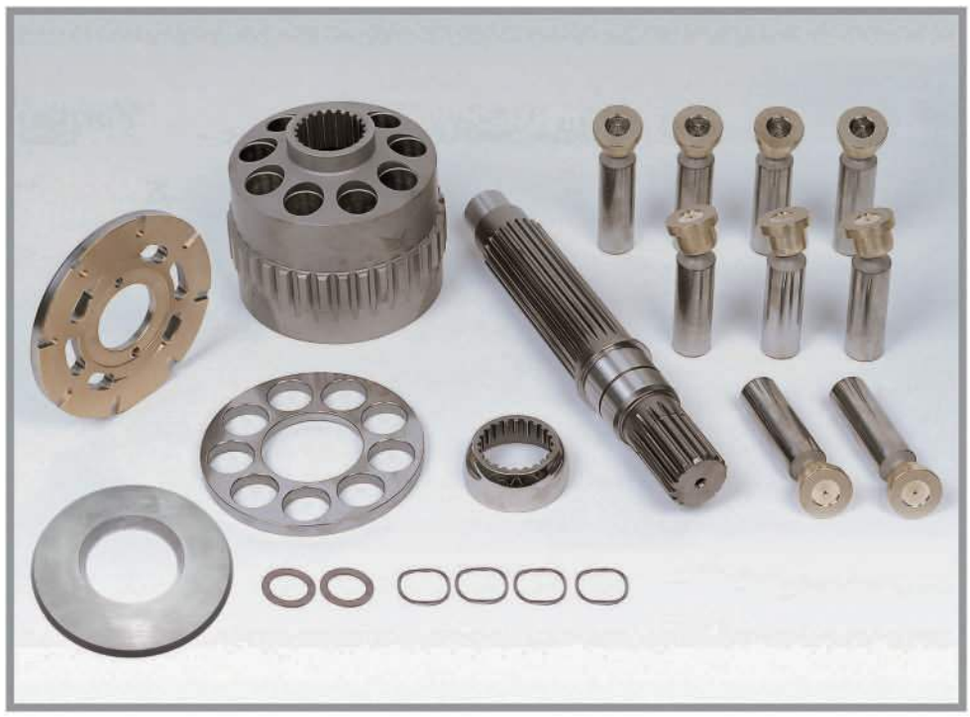



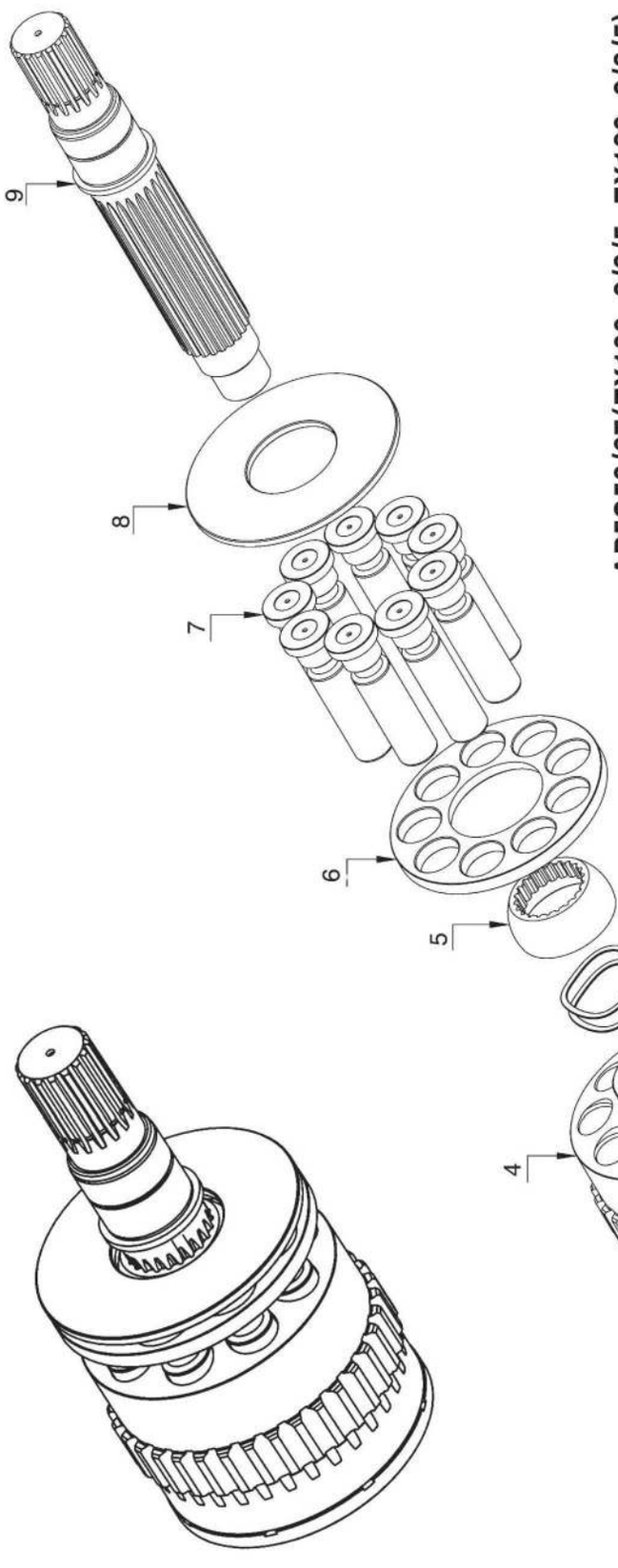

AP5S53/67(EX100-2/3/5, EX120-2/3/5)

ITEM	DESCRIPTION	QUANTITY	REMARK
1	VALVE PLATE	1	
2	SPACE	2	
3-A	WAVE SPRING	2	OF CYLINDER BLOCK
3-B	[DISK SPRING]	2	OF BALL GUIDE
4	CYLINDER BLOCK	1	
5	BALL GUIDE	1	
6	SET PLATE	1	
7	PISTON SHOE	9	
8	SHOE PLATE	1	
9	DRIVE SHAFT	1	

HANDOK HYDRAULIC





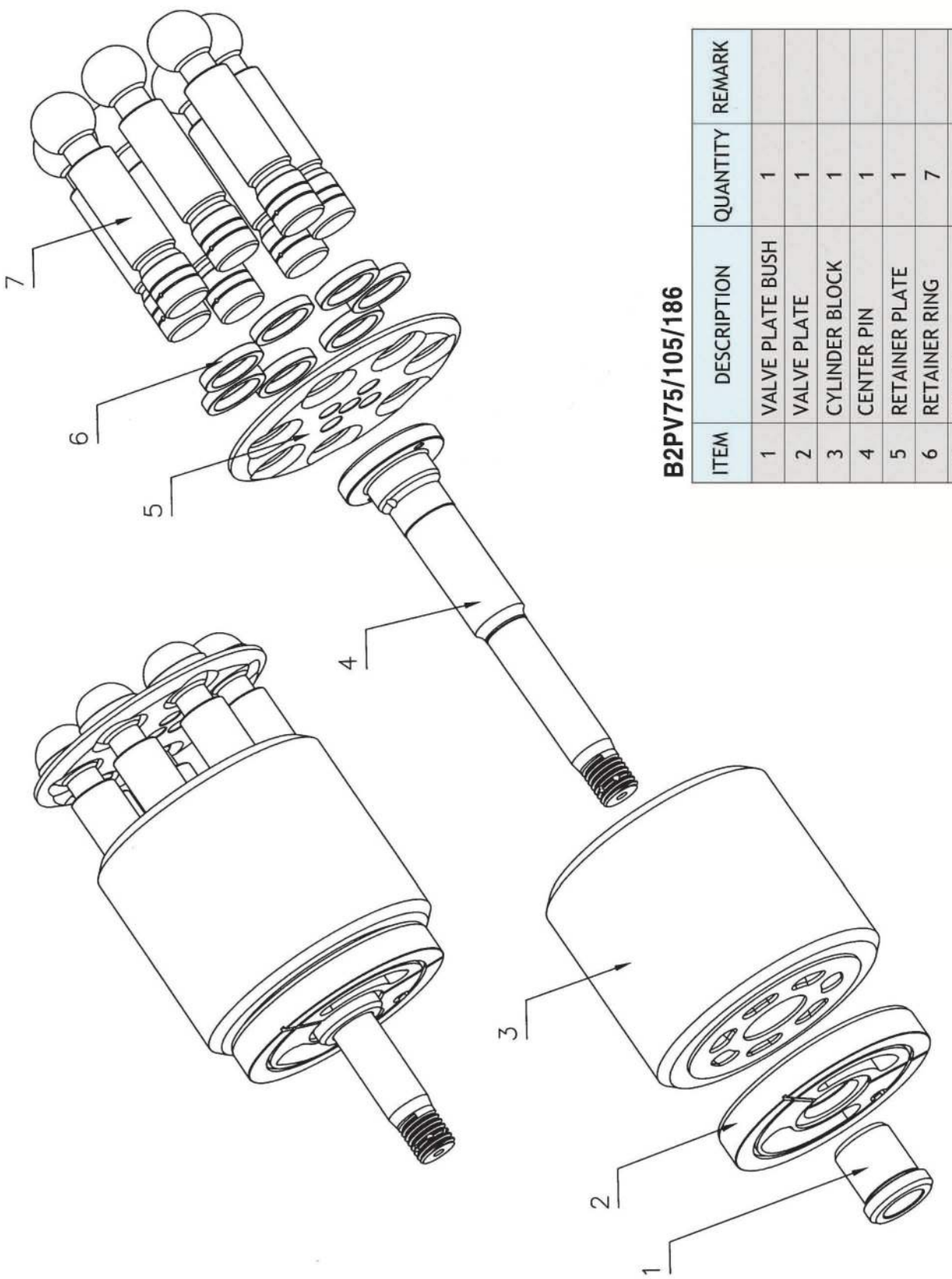

B2PV75/105/186

ITEM	DESCRIPTION	QUANTITY	REMARK
1	VALVE PLATE BUSH	1	
2	VALVE PLATE	1	
3	CYLINDER BLOCK	1	
4	CENTER PIN	1	
5	RETAINER PLATE	1	
6	RETAINER RING	7	
7	PISTON	7	

HANDOK HYDRAULIC



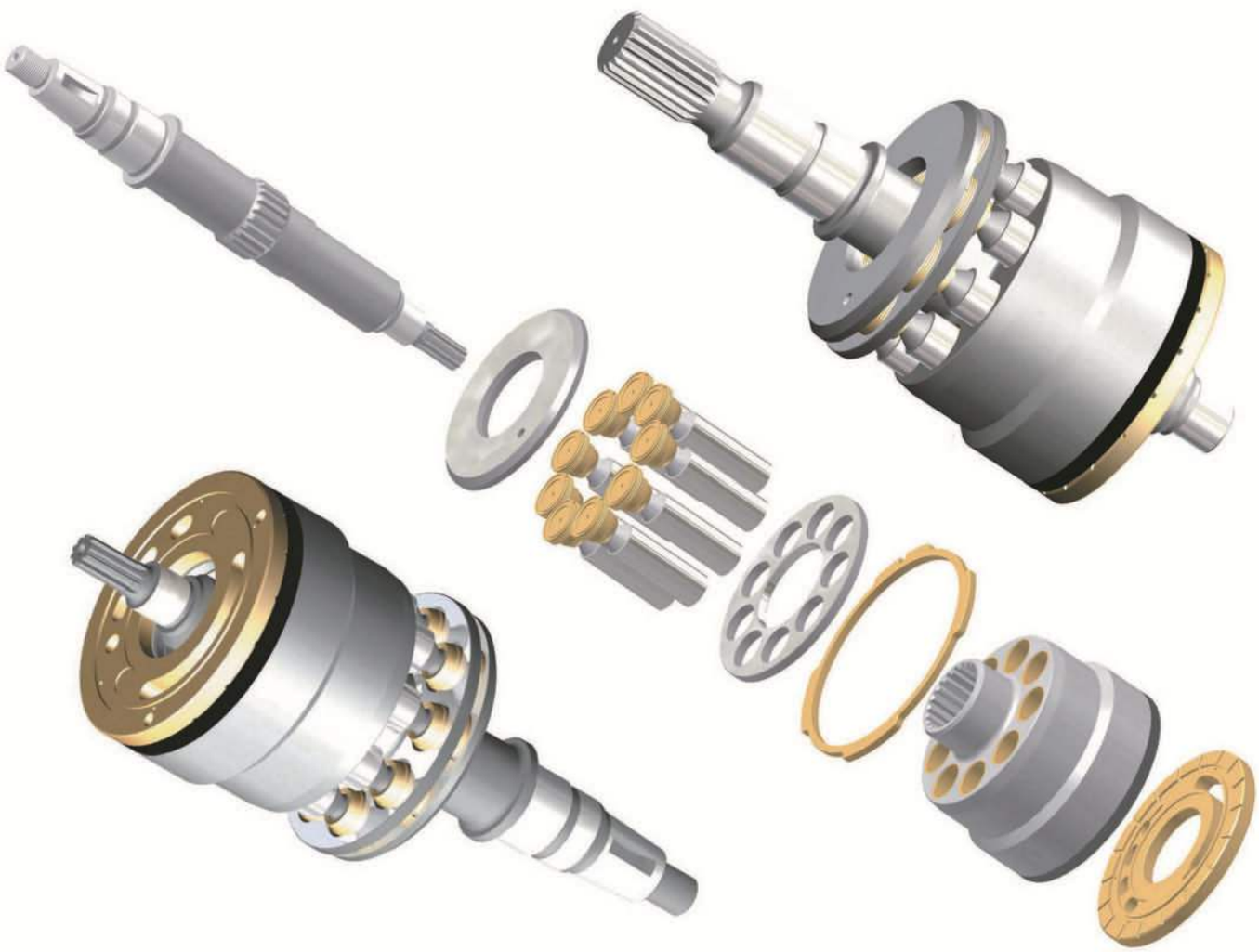

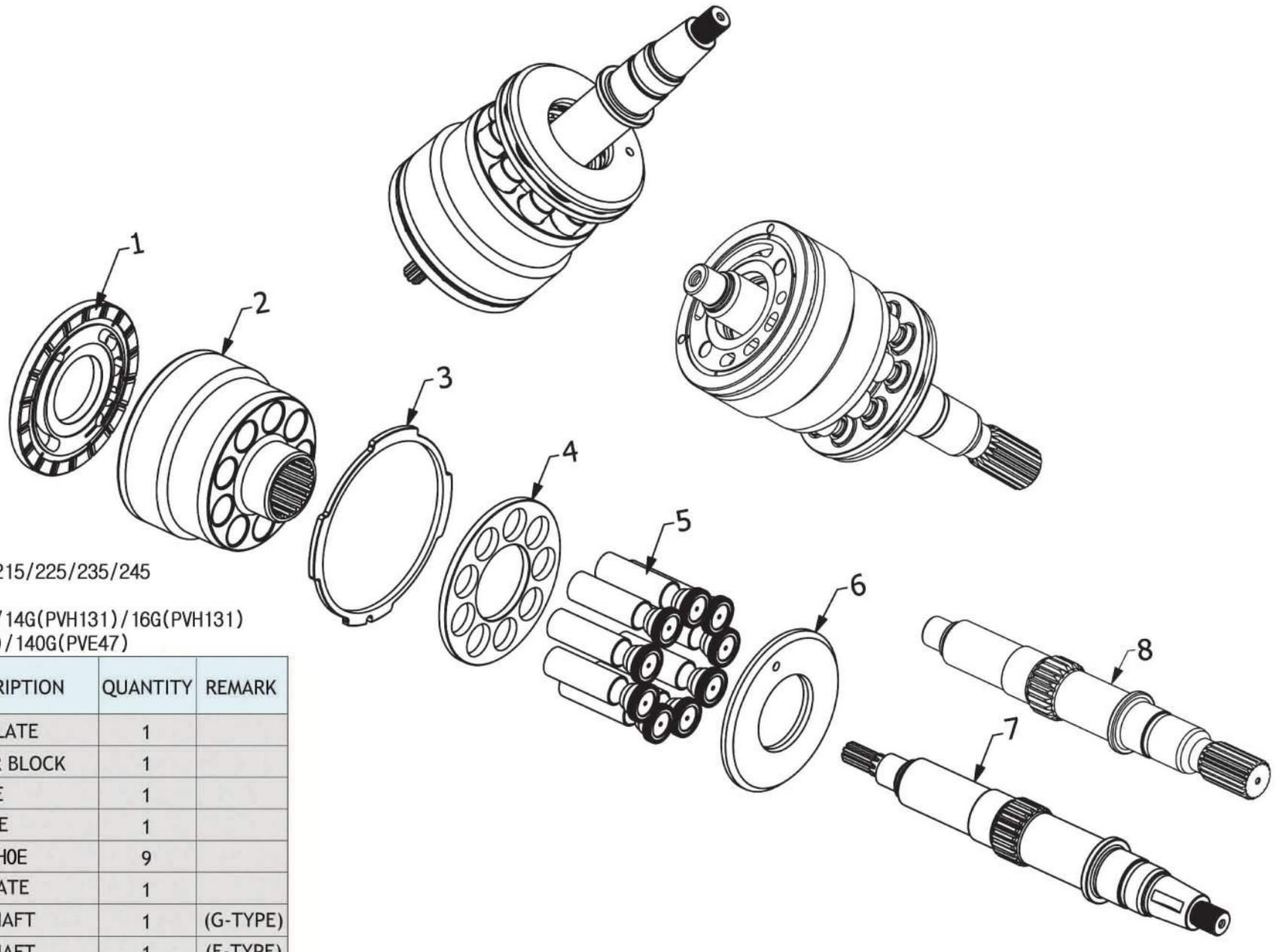

EXCAVATOR CAT215/225/235/245
MOTOR GRADER
CAT12G(PVH98)/14G(PVH131)/16G(PVH131)
CAT120G(PVE35)/140G(PVE47)

ITEM	DESCRIPTION	QUANTITY	REMARK
1	VALVE PLATE	1	
2	CYLINDER BLOCK	1	
3	FIX PLATE	1	
4	SET PLATE	1	
5	PISTON SHOE	9	
6	SHOE PLATE	1	
7	DRIVE SHAFT	1	(G-TYPE)
8	DRIVE SHAFT	1	(E-TYPE)

HAN DOK HYDRAULIC

DNB50/60





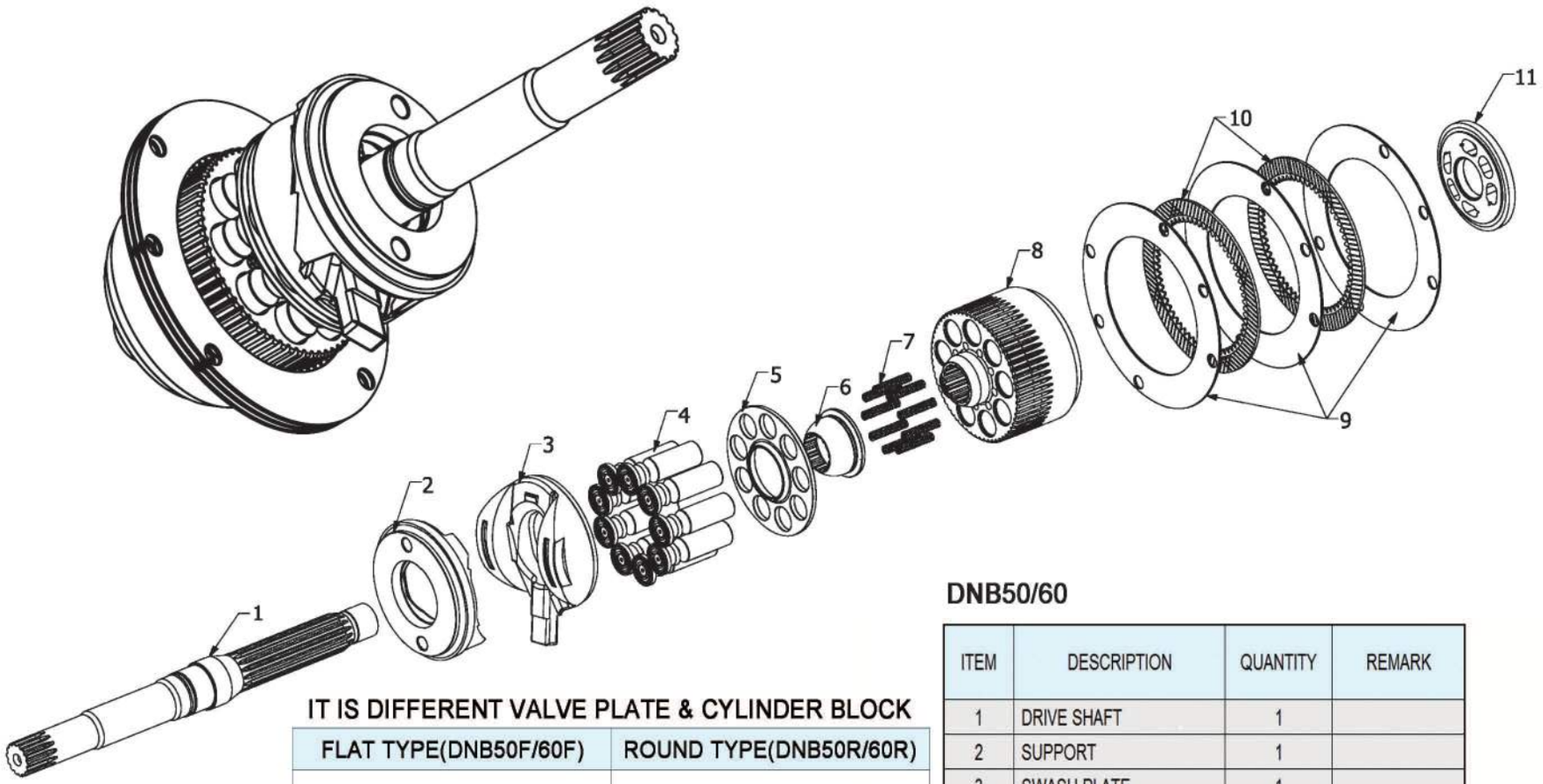

DNB50/60

ITEM	DESCRIPTION	QUANTITY	REMARK
1	DRIVE SHAFT	1	
2	SUPPORT	1	
3	SWASH PLATE	1	
4	PISTON SHOE	9	
5	SET PLATE	1	
6	BALL GUIDE	1	
7	COIL SPRING	9	
8	CYLINDER BLOCK	1	
9	SEPARATION PLATE	3	
10	FRICTION PLATE	2	
11	VALVE PLATE	1	

IT IS DIFFERENT VALVE PLATE & CYLINDER BLOCK

FLAT TYPE(DNB50F/60F)	ROUND TYPE(DNB50R/60R)
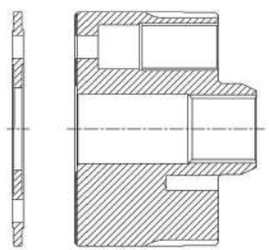	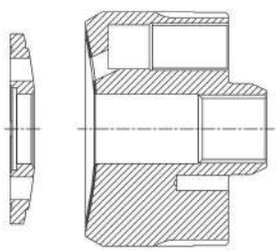

HAN DOK HYDRAULIC



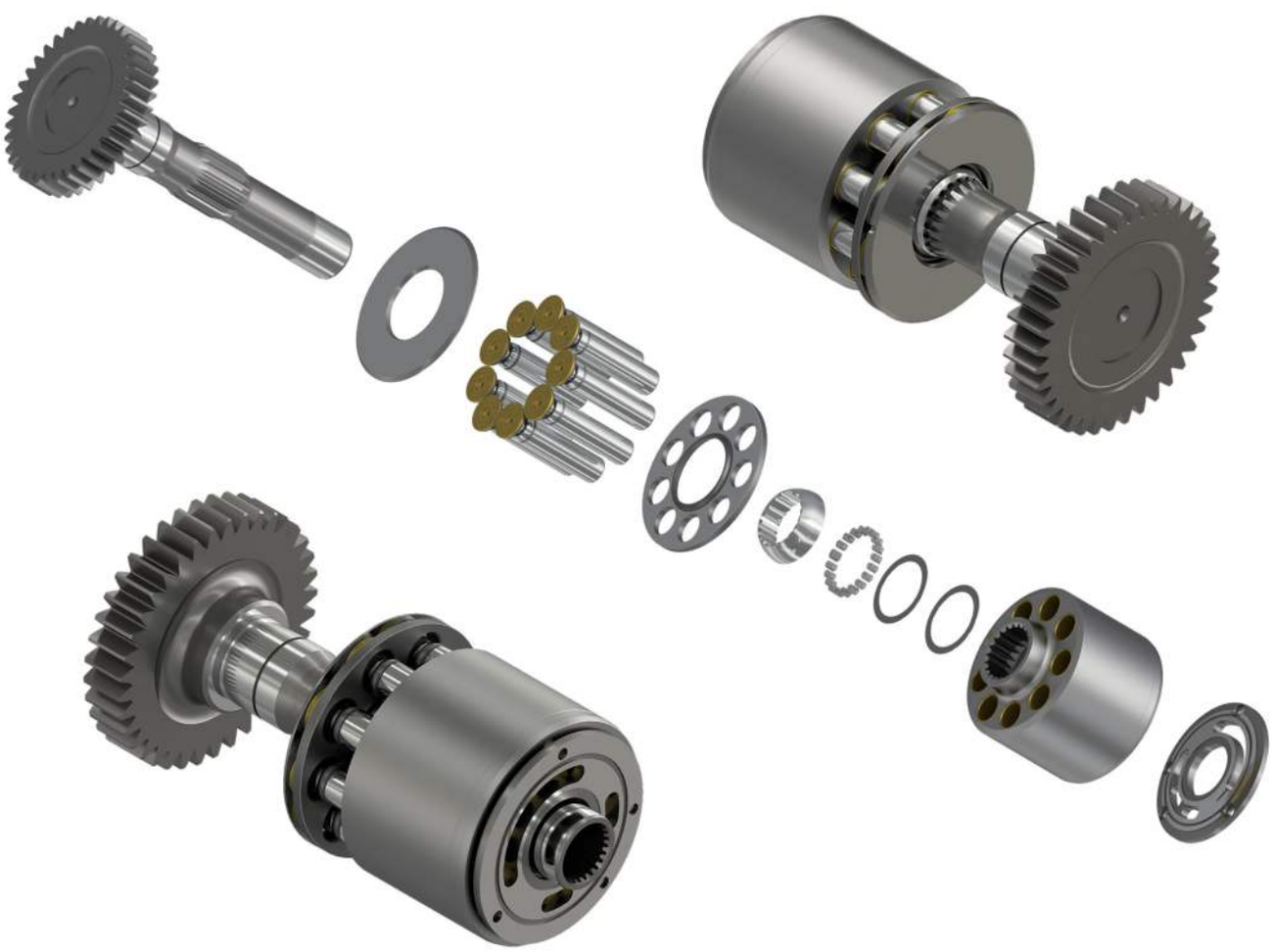

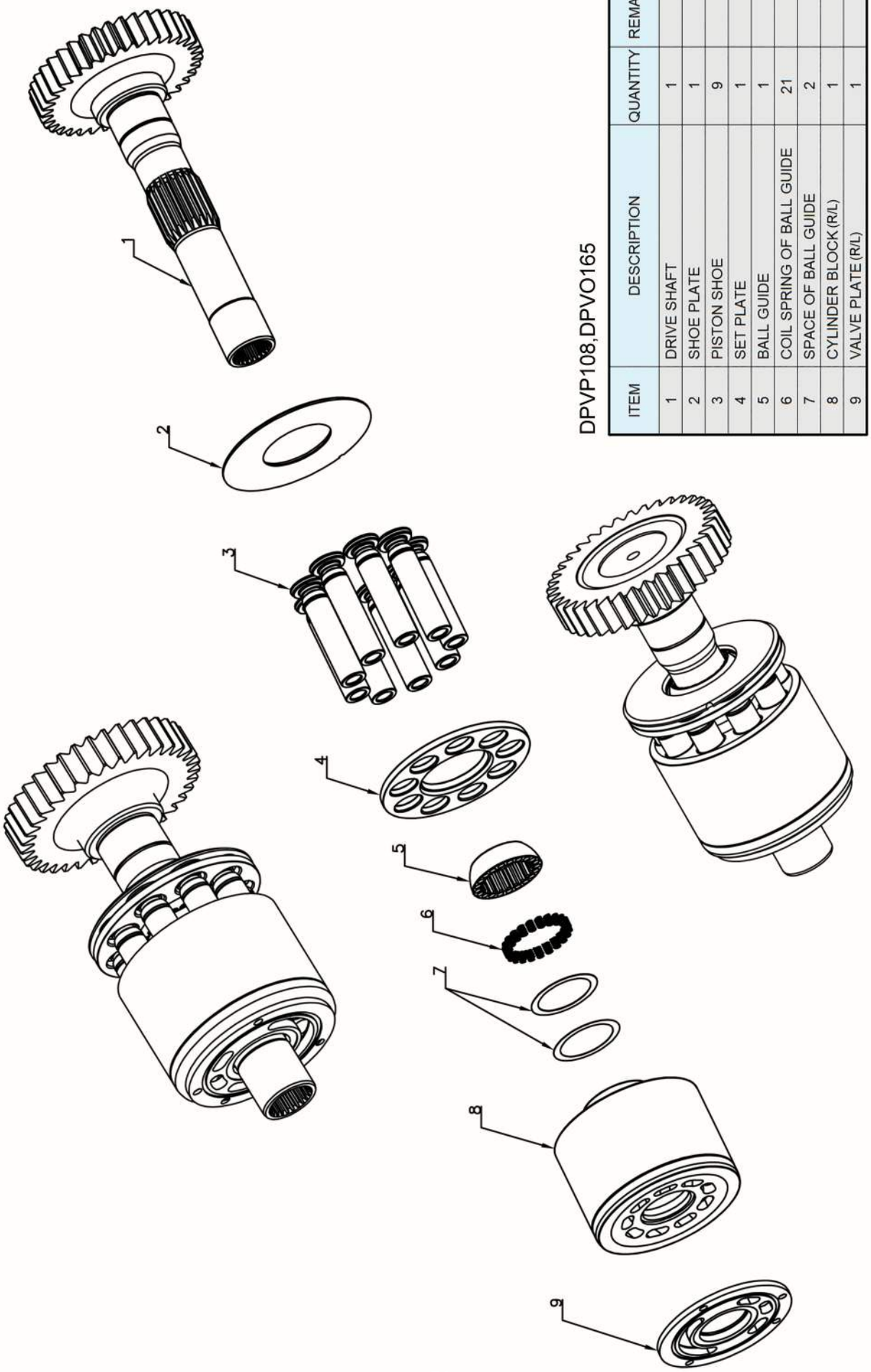

DPVP108,DPVO165

ITEM	DESCRIPTION	QUANTITY	REMARK
1	DRIVE SHAFT	1	
2	SHOE PLATE	1	
3	PISTON SHOE	9	
4	SET PLATE	1	
5	BALL GUIDE	1	
6	COIL SPRING OF BALL GUIDE	21	
7	SPACE OF BALL GUIDE	2	
8	CYLINDER BLOCK(R/L)	1	
9	VALVE PLATE(R/L)	1	

HAN DOK HYDRAULIC



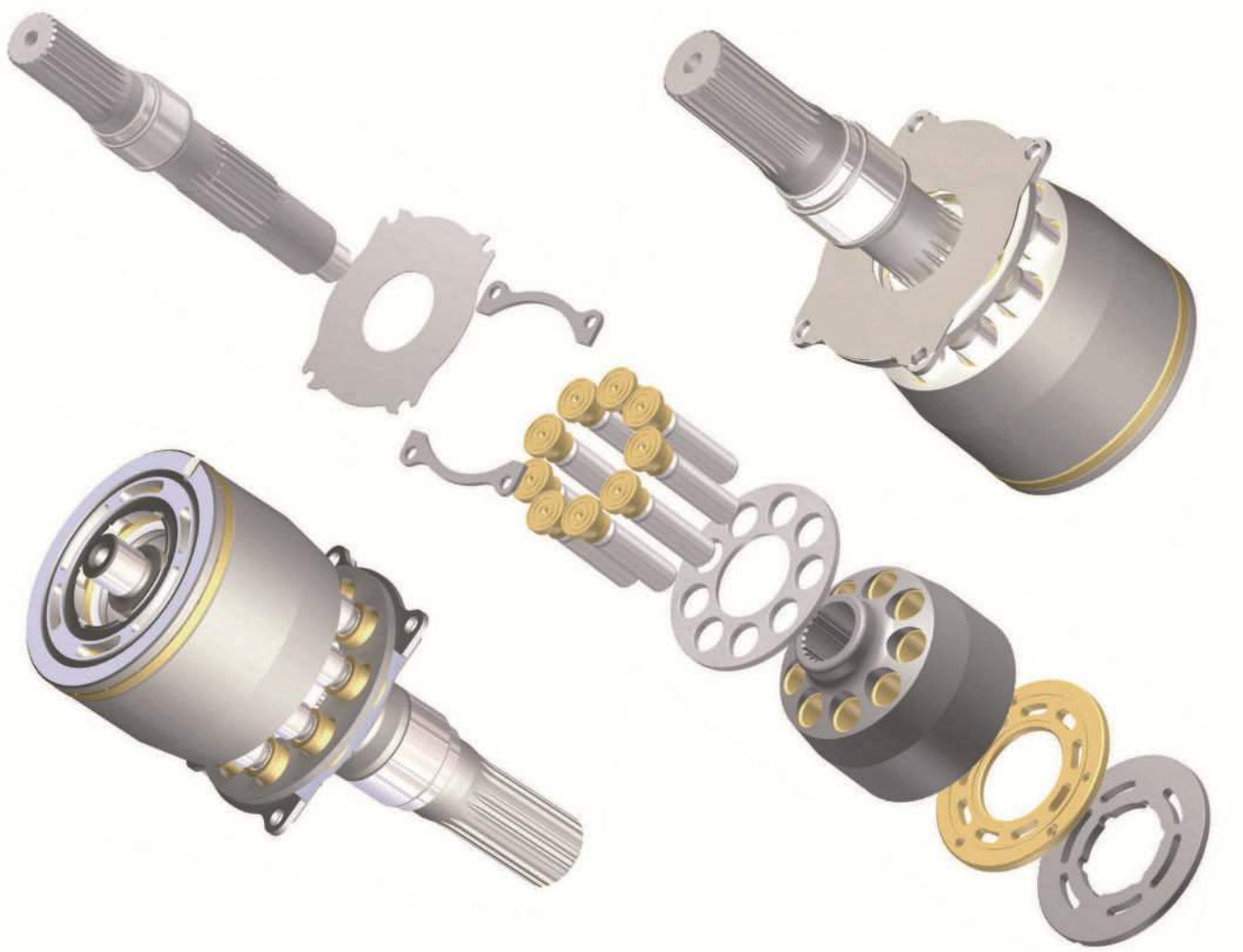

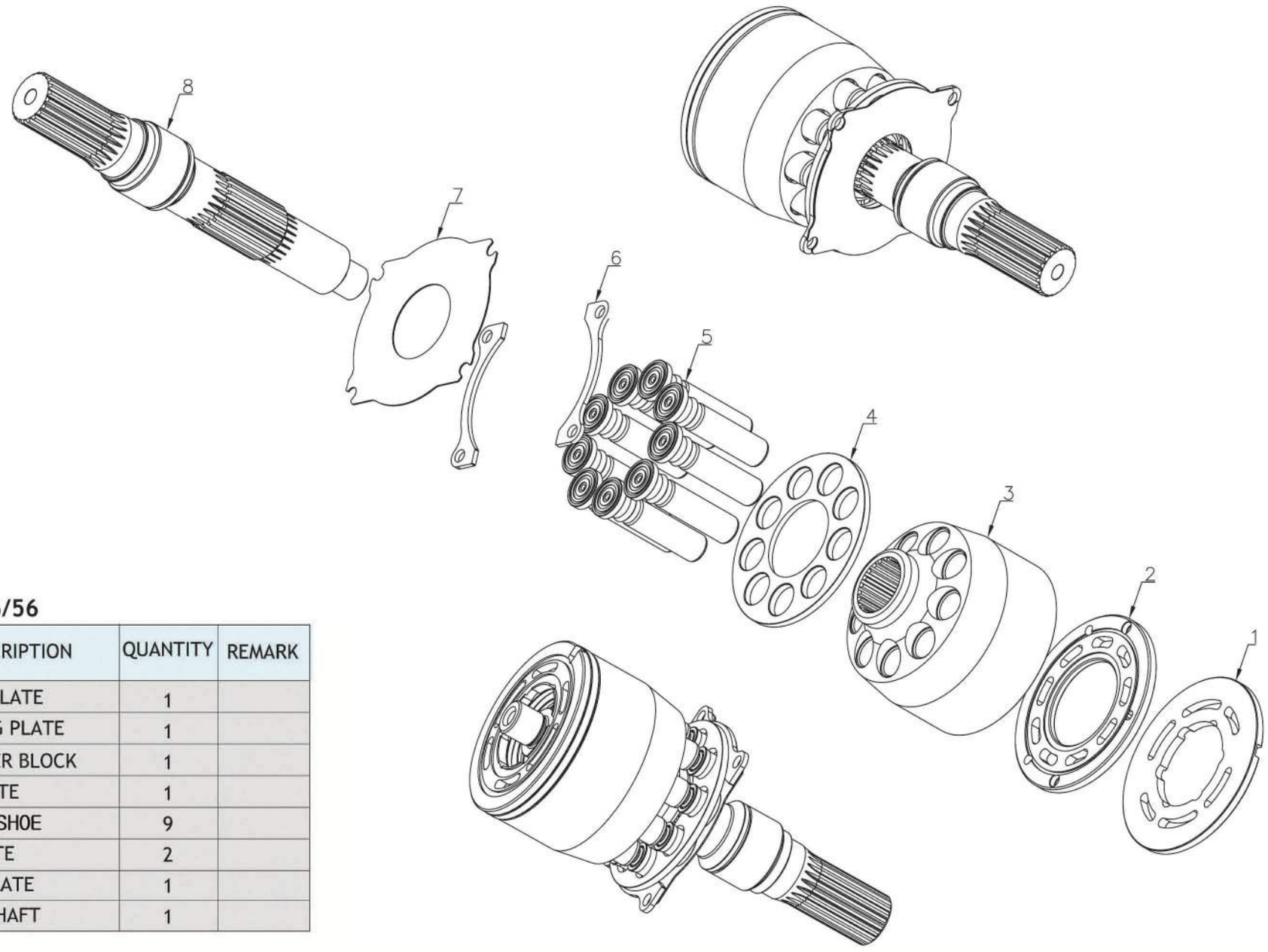

EATON33/46/56

ITEM	DESCRIPTION	QUANTITY	REMARK
1	VALVE PLATE	1	
2	BEARING PLATE	1	
3	CYLINDER BLOCK	1	
4	SET PLATE	1	
5	PISTON SHOE	9	
6	FIX PLATE	2	
7	SHOE PLATE	1	
8	DRIVE SHAFT	1	

HAN DOK HYDRAULIC



IT IS DIFFERENT SWASH PLATE

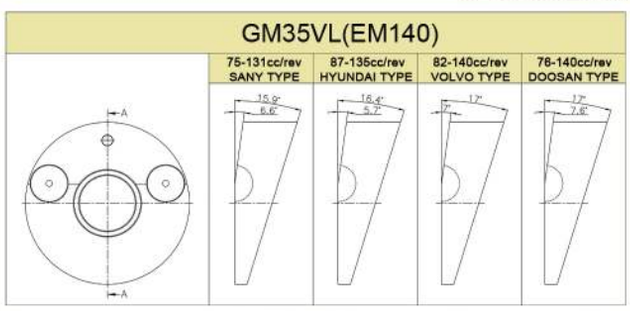

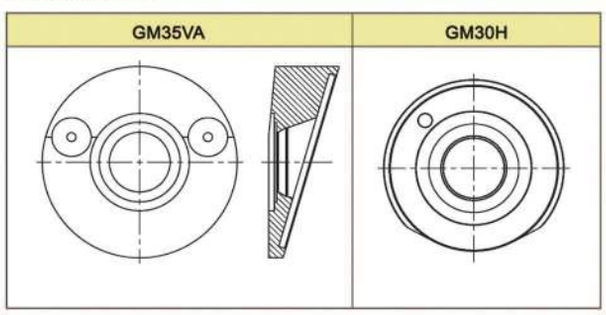

IT IS DIFFERENT DRIVE SHAFT & SUN GEAR

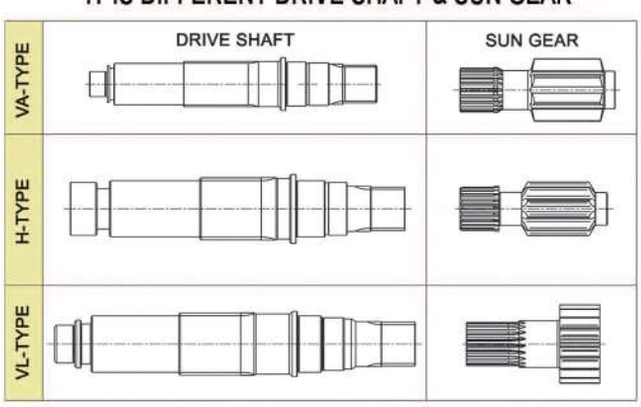

IT IS DIFFERENT VALVE PLATE

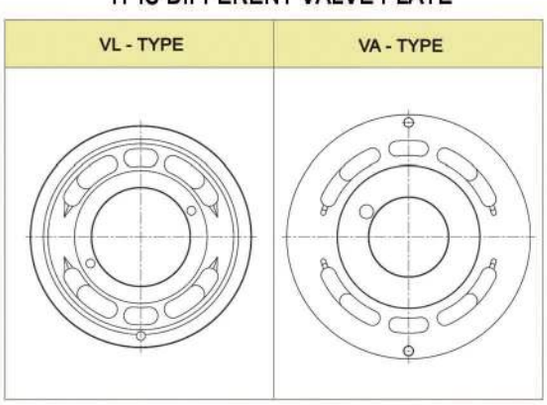

IT IS DIFFERENT COUPLING

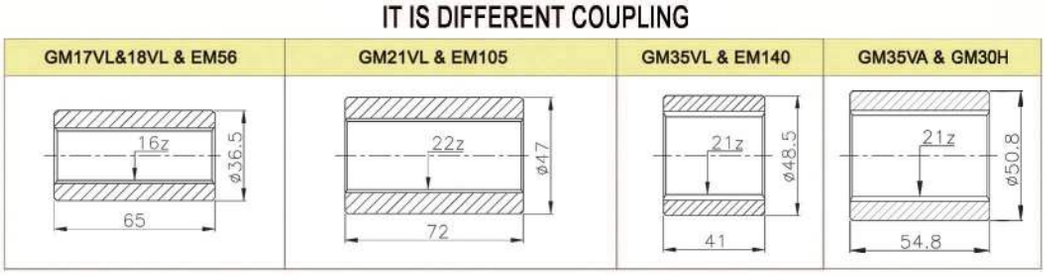

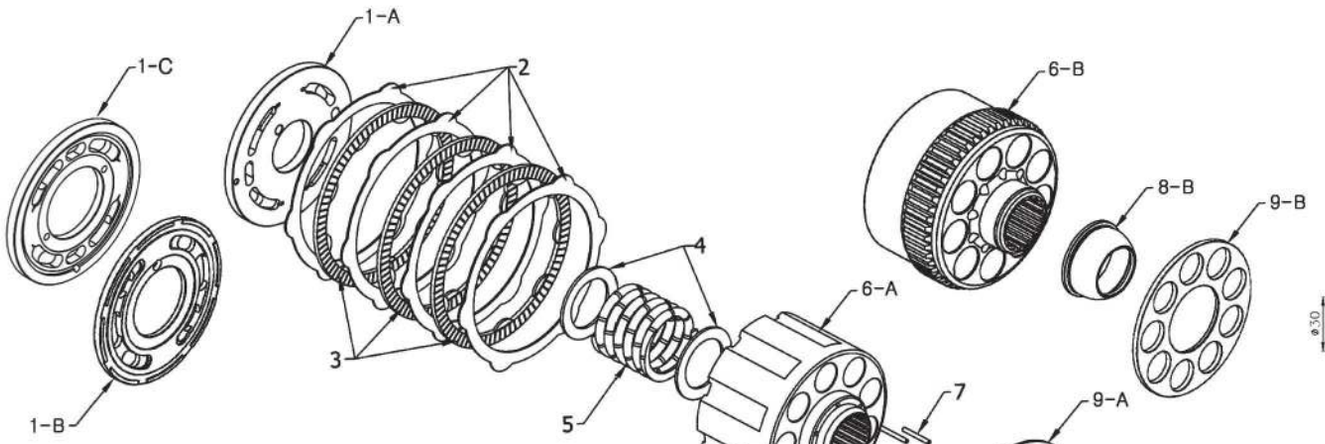

IT IS DIFFERENT DRIVE SHAFT

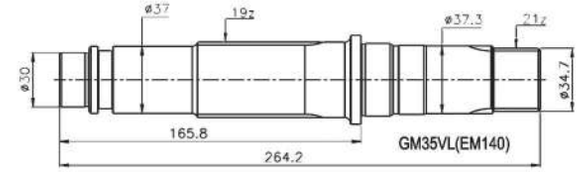

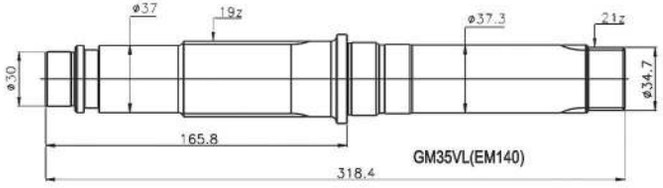

IT IS DIFFERENT SWASH PLATE

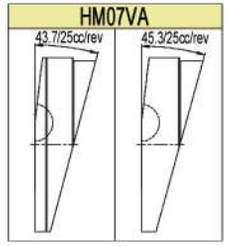

GM02/03/04/05/06/08/09/18/23/24/28/30/35/38

ITEM	DESCRIPTION	QUANTITY	REMARK
1-A	VALVE PLATE (VA-TYPE)	1	
1-B	VALVE PLATE (VB-TYPE)	1	
1-C	VALVE PLATE (VL-TYPE)	1	
2	SEPARATION PLATE	4	
3	FRICTION PALTE	3	
4	SPACE	2	
5	COIL SPRING	1	
6-A	CYLINDER BLOCK (VA-TYPE)	1	
6-B	CYLINDER BLOCK (VB-TYPE)	1	
7	PIN OF CYLINDER BLOCK	6	
8-A	BALL GUIDE (VA-TYPE)	1	
8-B	BALL GUIDE (VB-TYPE)	1	
9-A	SET PLATE (VA-TYPE)	1	
9-B	SET PLATE (VB-TYPE)	1	
10-A	PISTON SHOE (VA-TYPE)	9	
10-B	PISTON SHOE (VB-TYPE)	9	
11	SHOE PLATE	1	
12-A	SWASH PLATE (VL/VA-TYPE)	1	
12-B	SWASH PLATE (H-TYPE)	1	
13-A	DRIVE SHAFT (VA-TYPE)	1	
13-B	DRIVE SHAFT (H-TYPE)	1	
13-C	DRIVE SHAFT (VL-TYPE)	1	
14	COUPLING	1	
15-A	SUN GEAR (VA-TYPE)	1	
15-B	SUN GEAR (H-TYPE)	1	
15-C	SUN GEAR (VL-TYPE)	1	

HAN DOK HYDRAULIC

HMT36(HMGF40FA&HMK123)



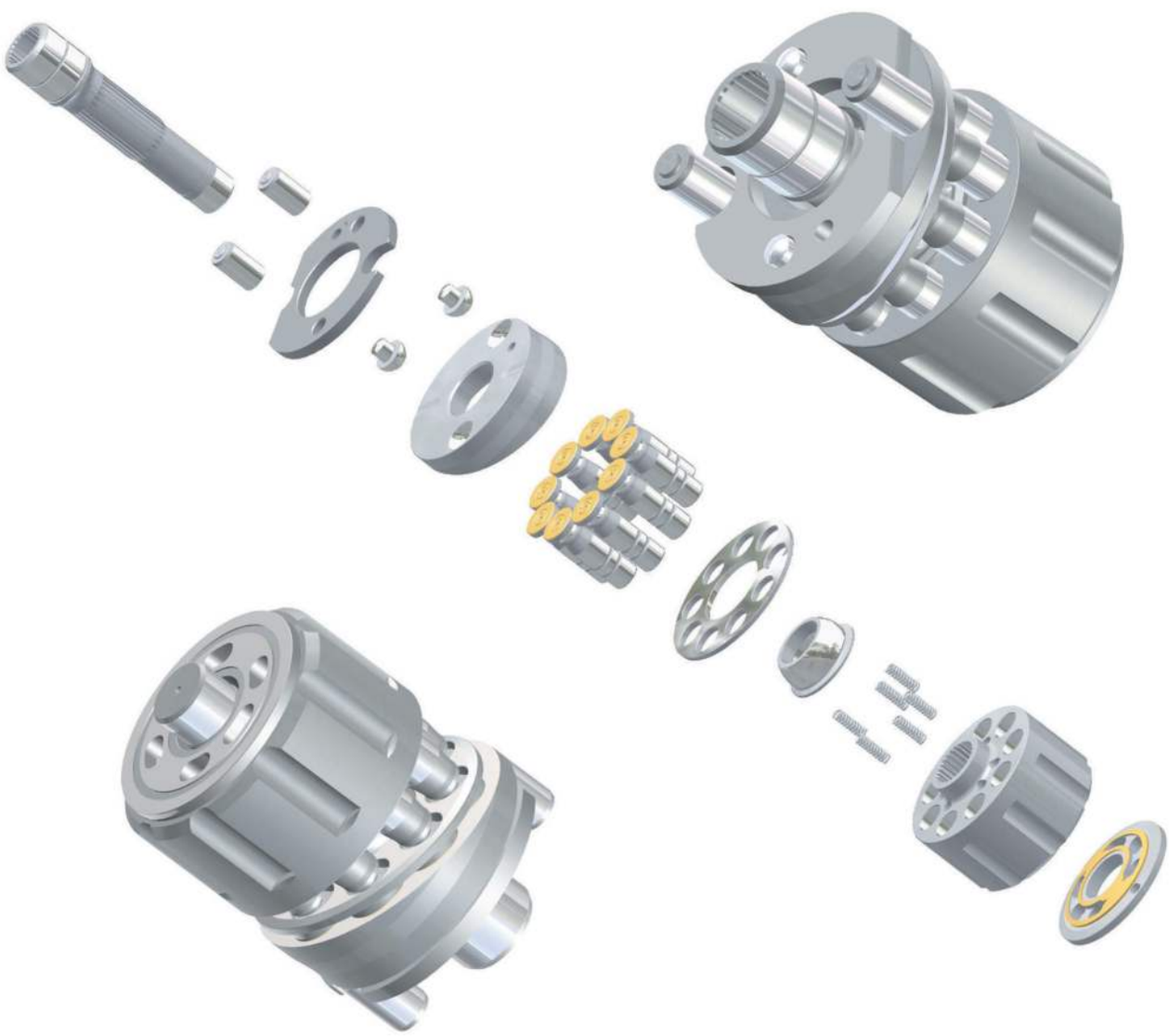

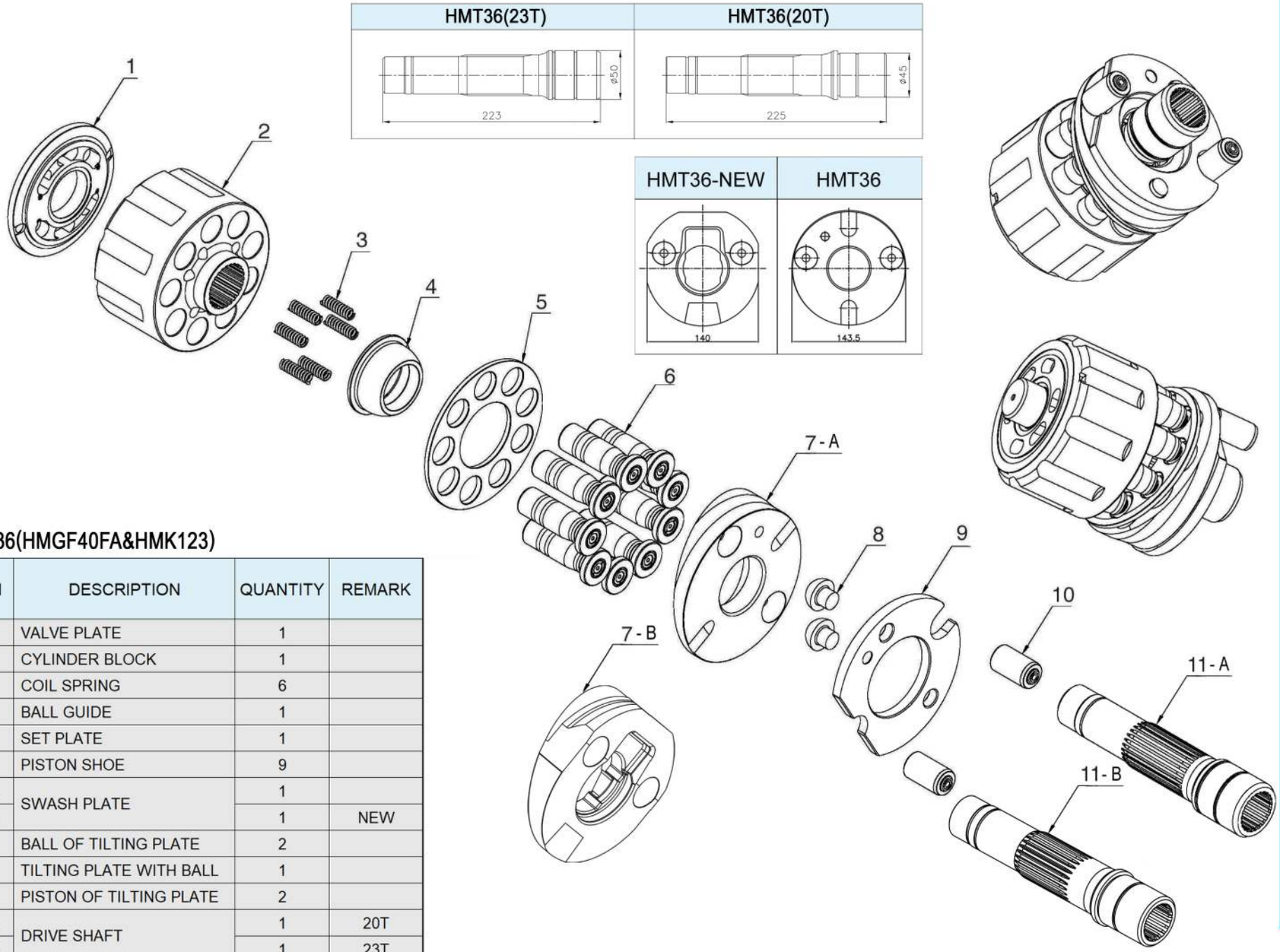

HMT36(HMGF40FA&HMK123)

ITEM	DESCRIPTION	QUANTITY	REMARK
1	VALVE PLATE	1	
2	CYLINDER BLOCK	1	
3	COIL SPRING	6	
4	BALL GUIDE	1	
5	SET PLATE	1	
6	PISTON SHOE	9	
7-A	SWASH PLATE	1	
7-B		1	NEW
8	BALL OF TILTING PLATE	2	
9	TILTING PLATE WITH BALL	1	
10	PISTON OF TILTING PLATE	2	
11-A	DRIVE SHAFT	1	20T
11-B		1	23T

HAN DOK HYDRAULIC

HMV110/160(PC200-6/7, PC300-6/7)



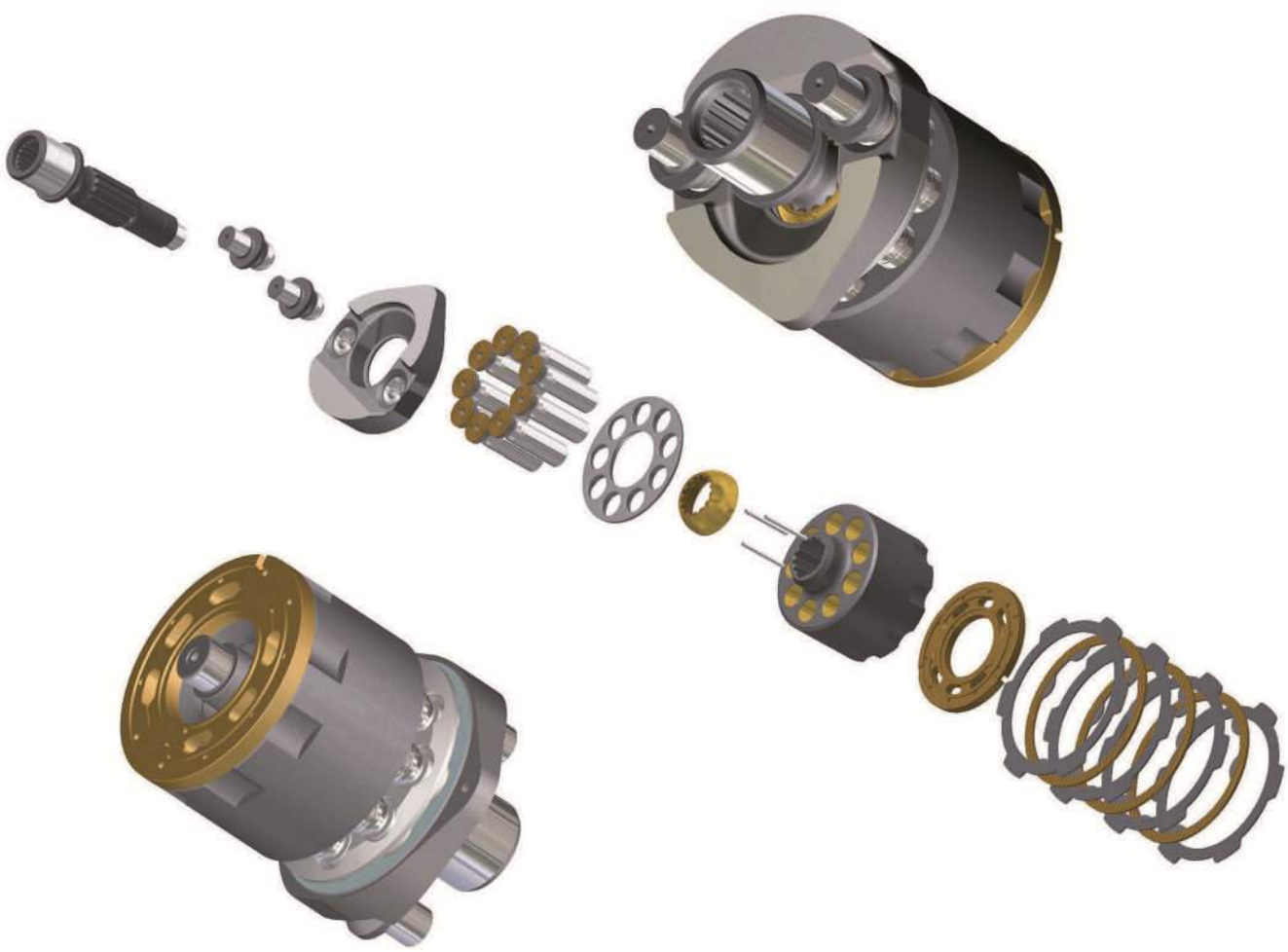

IT IS DIFFERENT VALVE PLATE & CYLINDER BLOCK

FLAT TYPE	ROUND TYPE
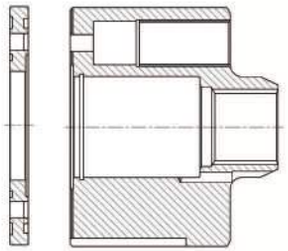	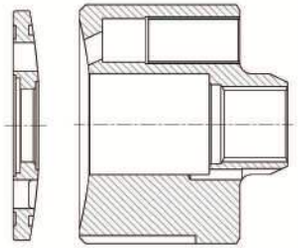

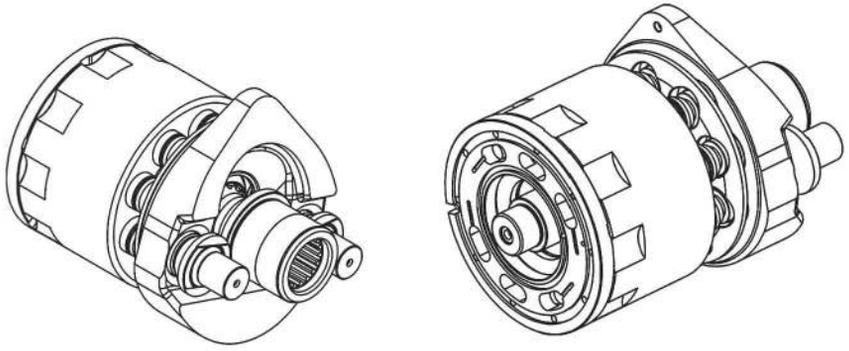

HMV110/160(PC200-6/7, PC300-6/7)

ITEM	DESCRIPTION	QUANTITY	REMARK
1	DRIVE SHAFT	1	
2	BALL OF CAM ROCKER	2	
3	CAM ROCKER	1	
4	PISTON SHOE	9	
5	SET PLATE	1	
6	BALL GUIDE	1	
7	PIN OF CYLINDER BLOCK	3	
8	CYLINDER BLOCK	1	
9	VALVE PLATE	1	
10	FRICTION PLATE	3	
11	SEPARATION PLATE	4	

HAN DOK HYDRAULIC



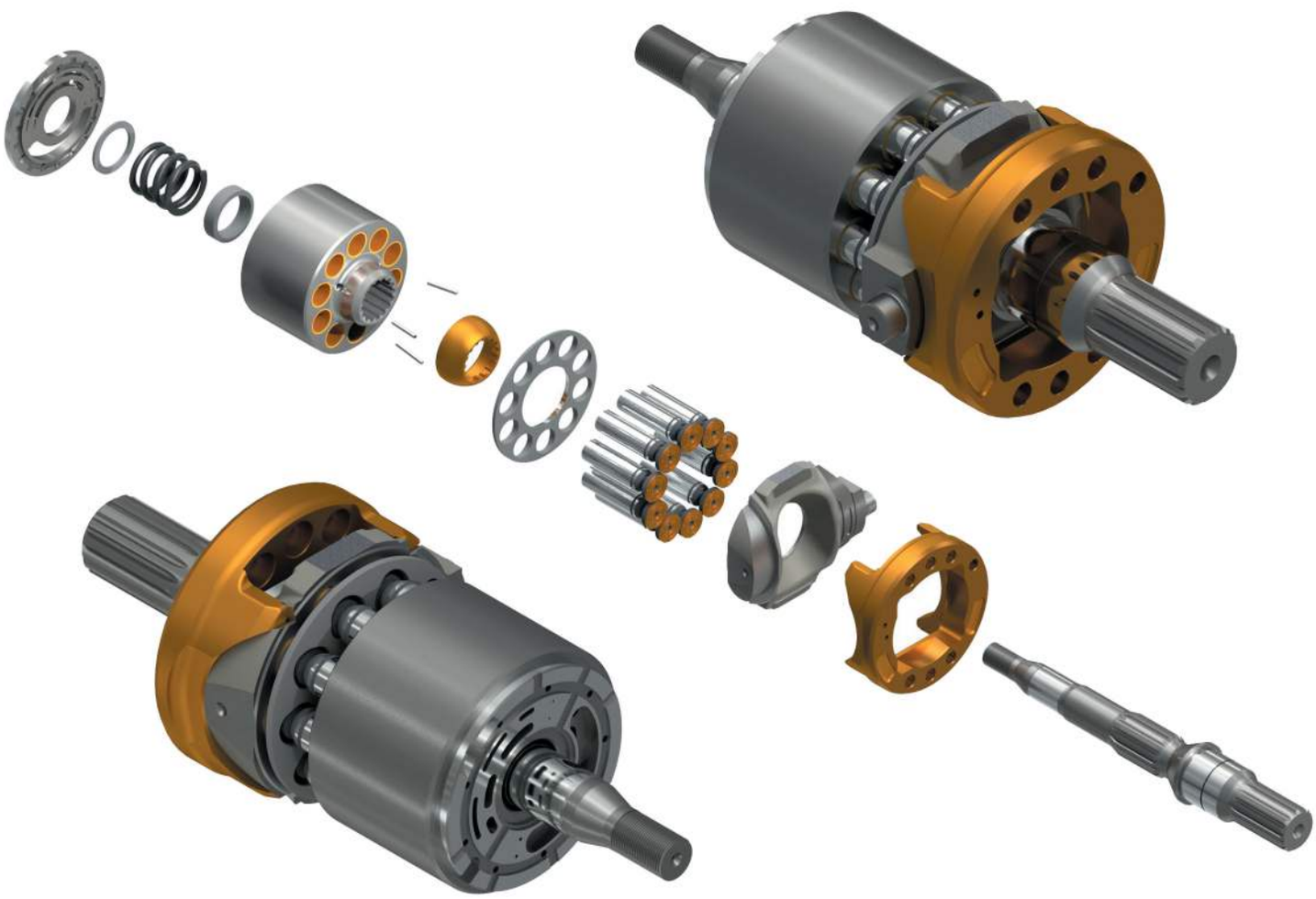

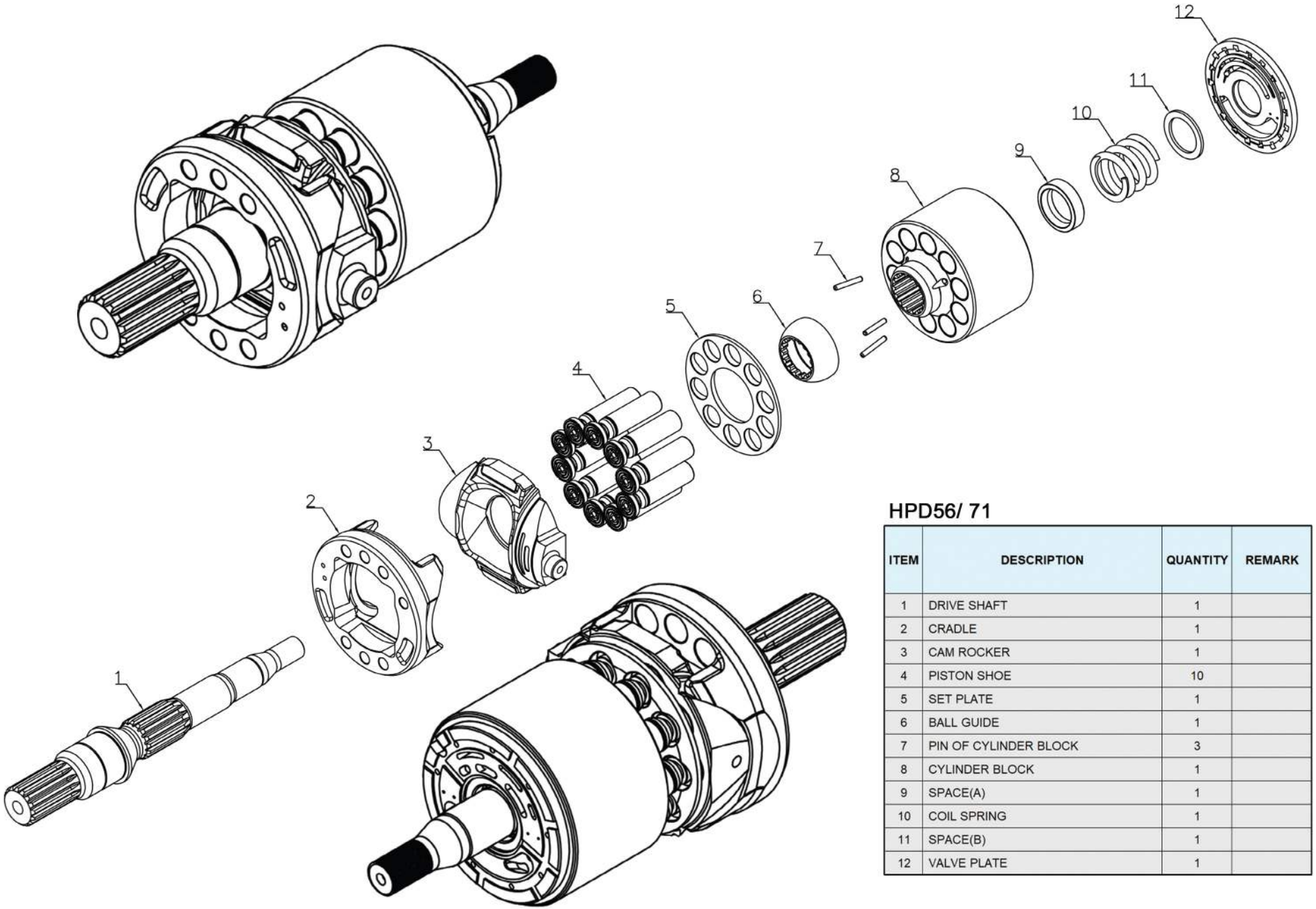

HPD56/ 71

ITEM	DESCRIPTION	QUANTITY	REMARK
1	DRIVE SHAFT	1	
2	CRADLE	1	
3	CAM ROCKER	1	
4	PISTON SHOE	10	
5	SET PLATE	1	
6	BALL GUIDE	1	
7	PIN OF CYLINDER BLOCK	3	
8	CYLINDER BLOCK	1	
9	SPACE(A)	1	
10	COIL SPRING	1	
11	SPACE(B)	1	
12	VALVE PLATE	1	

HAN DOK HYDRAULIC



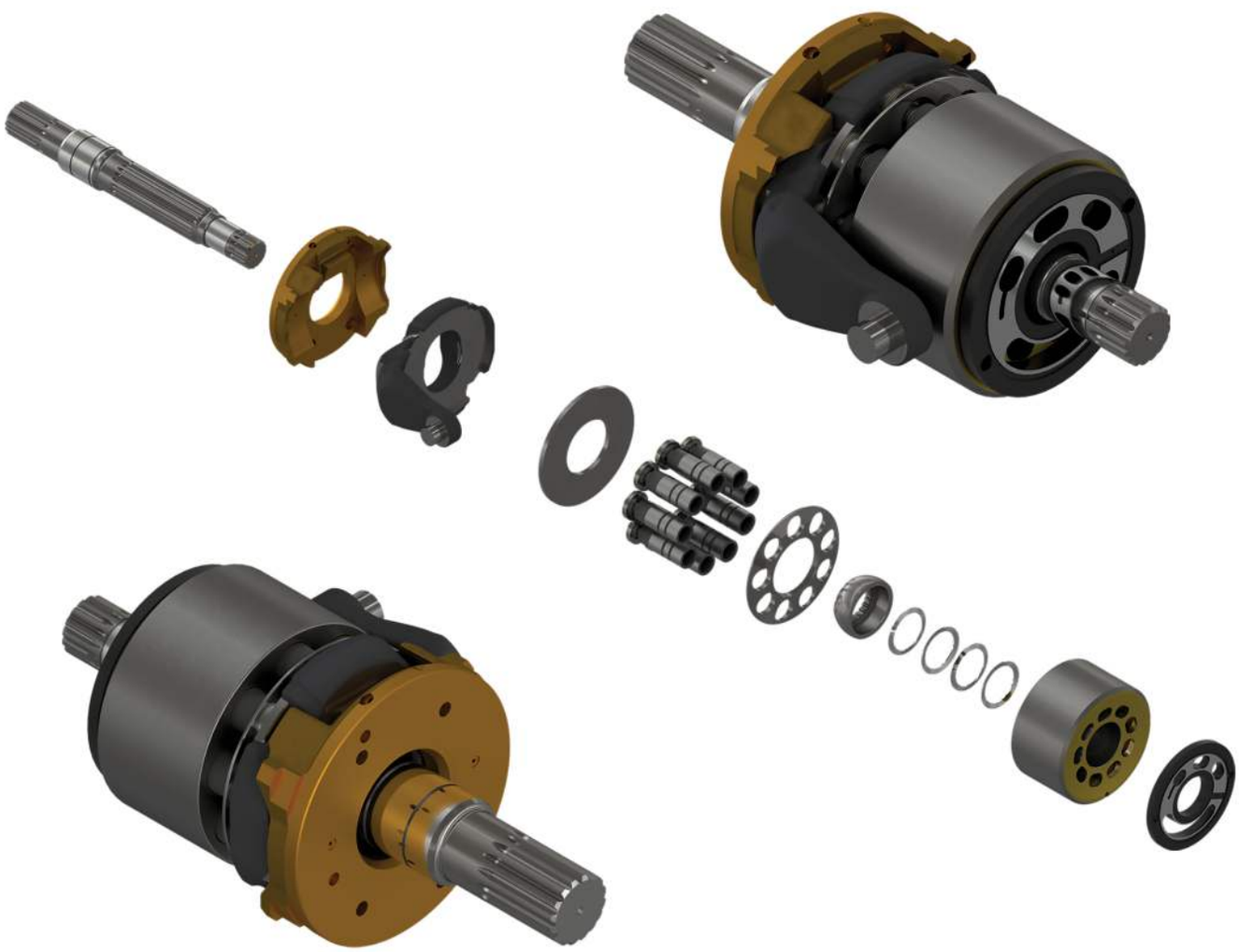

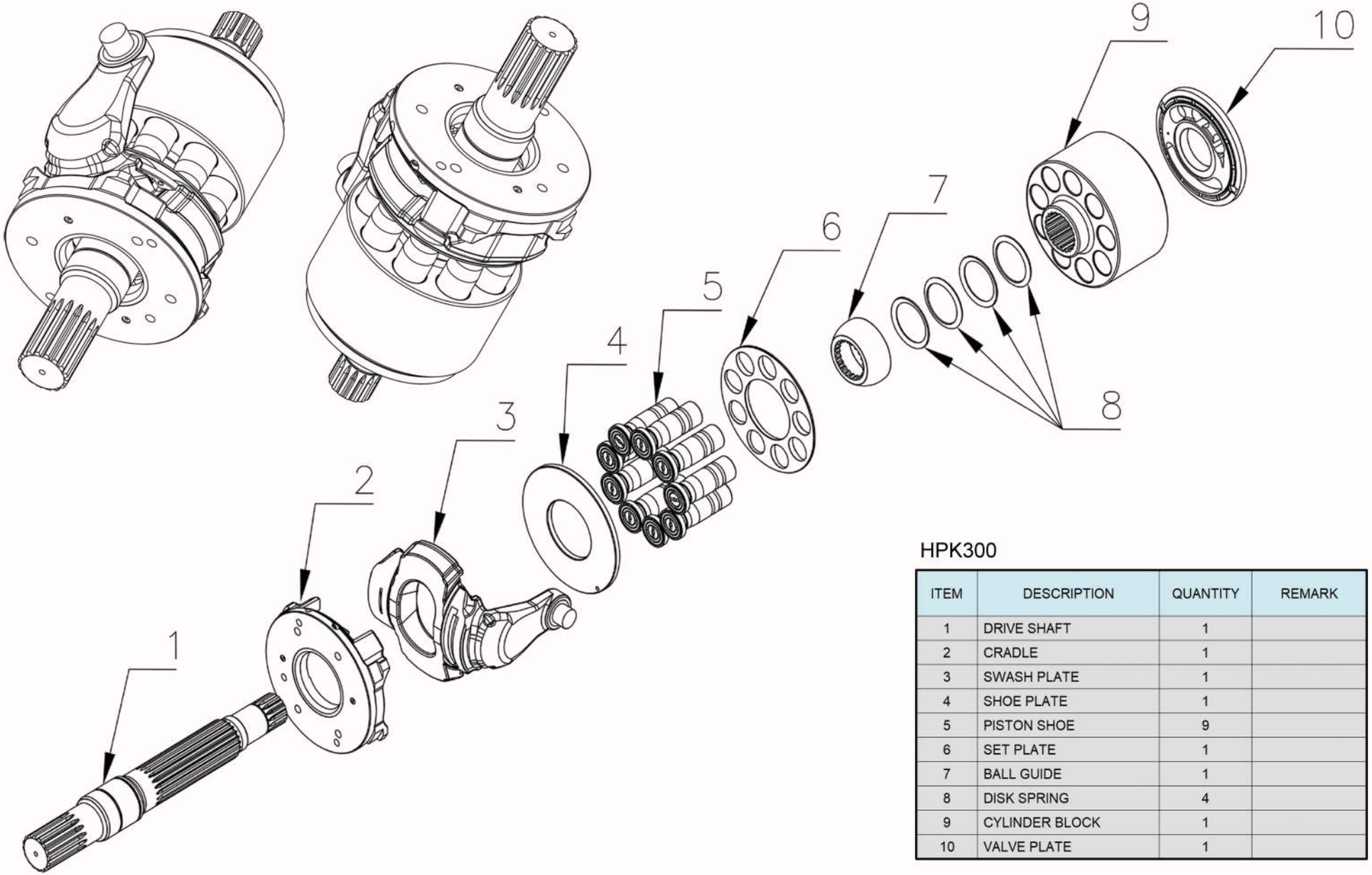

HPK300

ITEM	DESCRIPTION	QUANTITY	REMARK
1	DRIVE SHAFT	1	
2	CRADLE	1	
3	SWASH PLATE	1	
4	SHOE PLATE	1	
5	PISTON SHOE	9	
6	SET PLATE	1	
7	BALL GUIDE	1	
8	DISK SPRING	4	
9	CYLINDER BLOCK	1	
10	VALVE PLATE	1	

HAN DOK HYDRAULIC





HPR75/90/100

ITEM	DESCRIPTION	QUANTITY	REMARK
1	SUPPORT (L/R)	1	
2	SLIDING BEARING (L/R)	2	
3	SWASH PLATE	1	
4	PISTON SHOE	9	
5	SERVO PISTON (SMALL)	1	
6	RING (SMALL)	1	
7	SERVO PISTON (BIG)	1	
8	RING (BIG)	1	
9	BUSHING (SMALL)	1	
10	BUSHING (BIG)	1	
11	BALL GUIDE	1	
12	PIN	3	
13	CYLINDER BLOCK	1	
14	SPACE	2	
15	COIL SPRING	1	
16	DRIVE SHAFT	1	
17	VALVE PLATE (L/R)	1	
18	SET PLATE	1	
19	PUSH ROD	1	

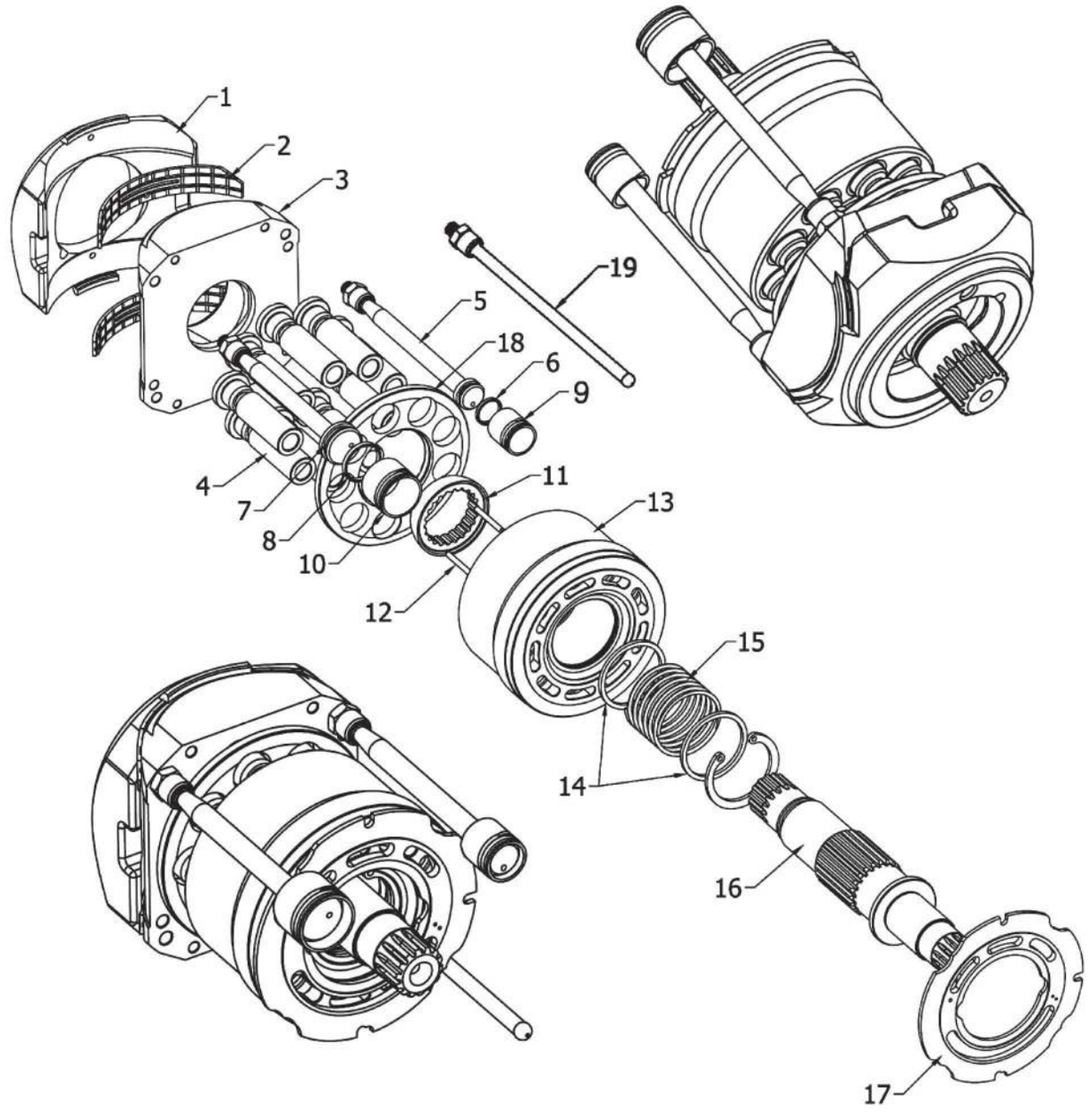

HAN DOK HYDRAULIC



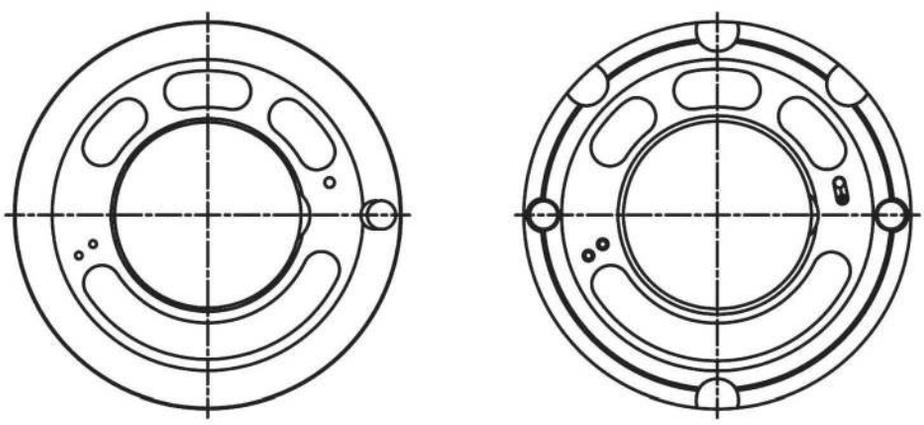

A-TYPE(DR)　　B-TYPE

IT IS DIFFERENT SHAPE OF THE BACK FACE

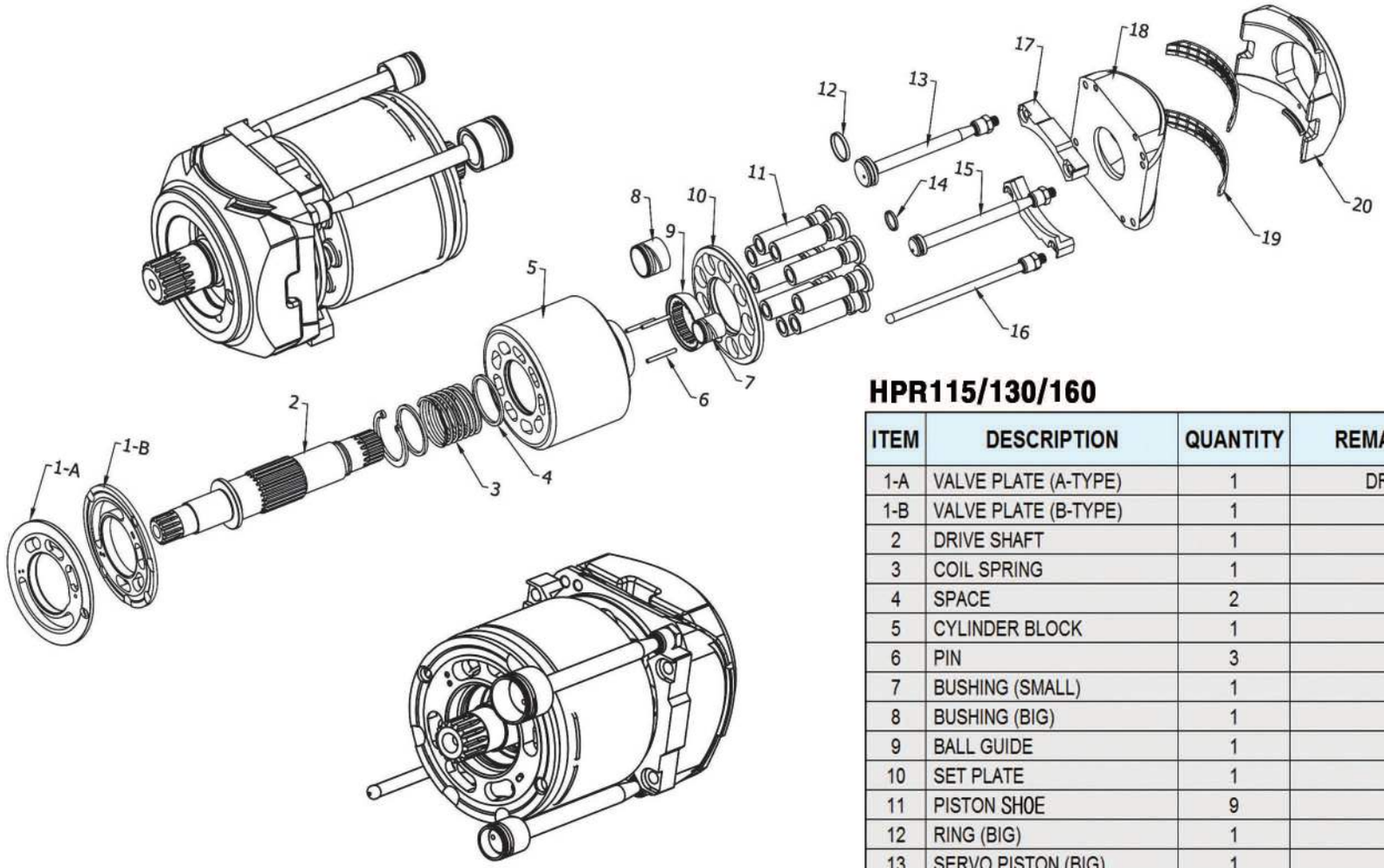

HPR115/130/160

ITEM	DESCRIPTION	QUANTITY	REMARK
1-A	VALVE PLATE (A-TYPE)	1	DR
1-B	VALVE PLATE (B-TYPE)	1	
2	DRIVE SHAFT	1	
3	COIL SPRING	1	
4	SPACE	2	
5	CYLINDER BLOCK	1	
6	PIN	3	
7	BUSHING (SMALL)	1	
8	BUSHING (BIG)	1	
9	BALL GUIDE	1	
10	SET PLATE	1	
11	PISTON SHOE	9	
12	RING (BIG)	1	
13	SERVO PISTON (BIG)	1	
14	RING (SMALL)	1	
15	SERVO PISTON (SMALL)	1	
16	PUSH ROD	1	
17	FIX PLATE	2	
18	SWASH PLATE	1	
19	SLIDING BEARING (L&R)	2	
20	SUPPORT (L/R)	1	

HAN DOK HYDRAULIC

HPVO91DW(EX200-2/220-2)



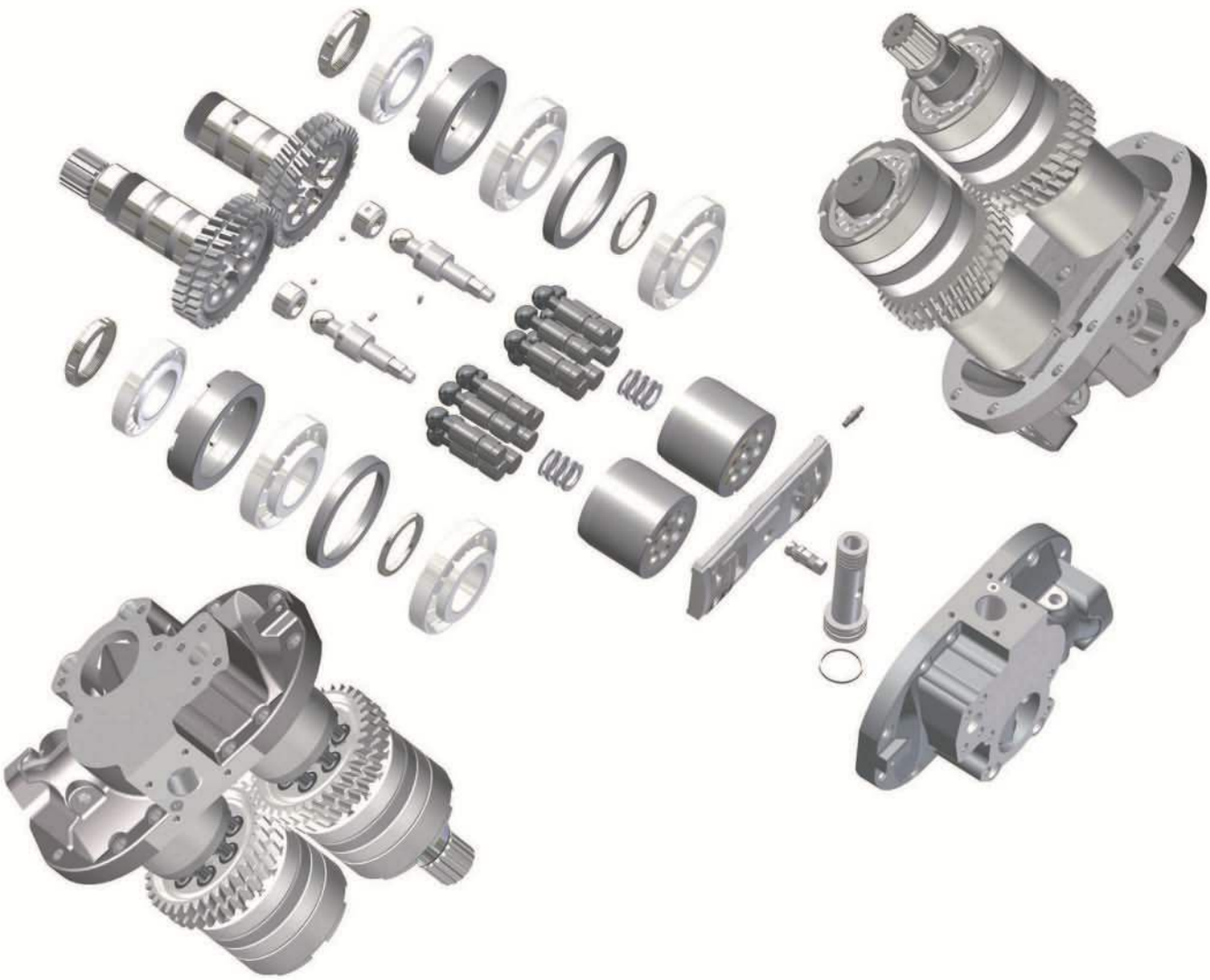

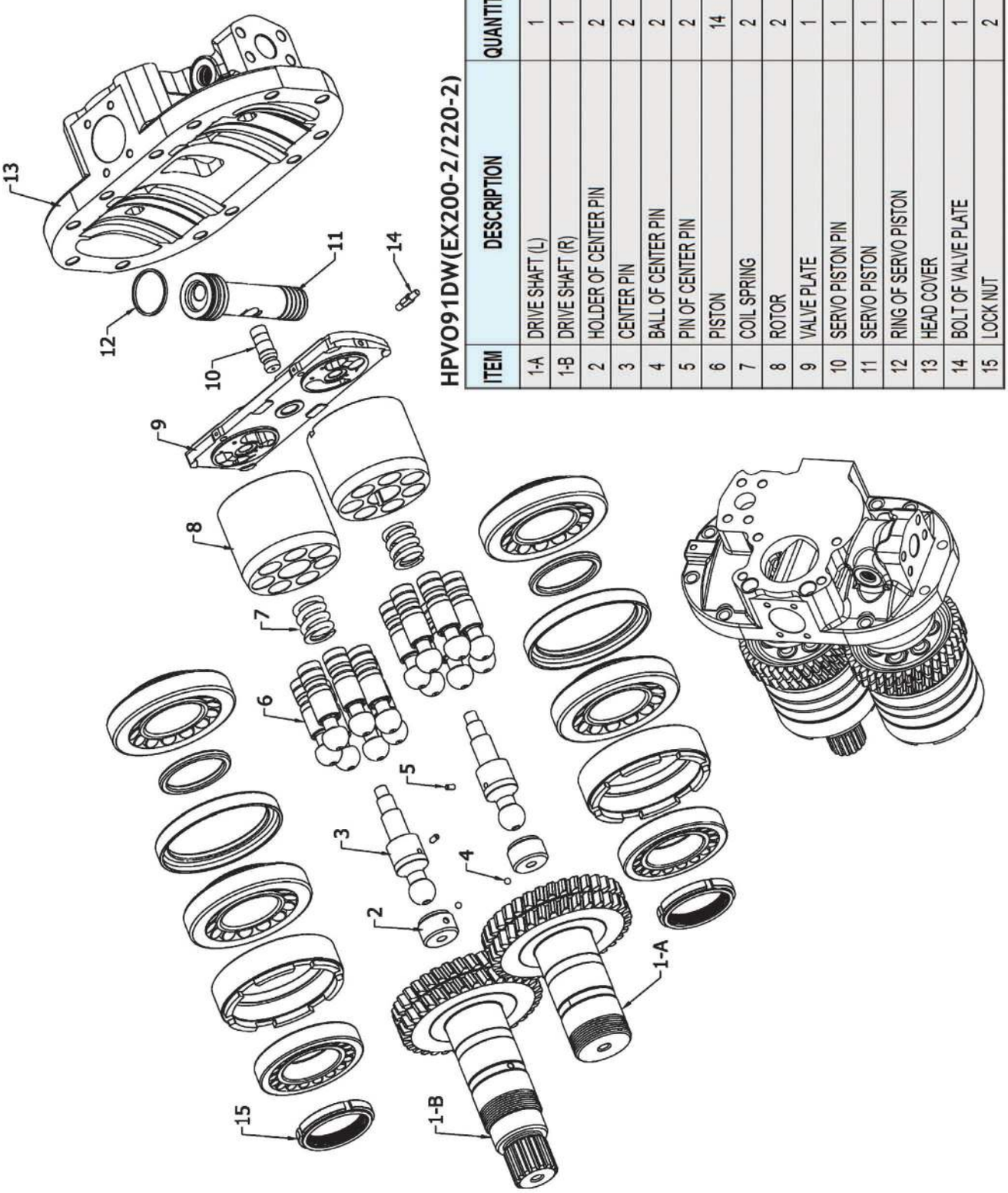

HPVO91DW(EX200-2/220-2)

ITEM	DESCRIPTION	QUANTITY	REMARK
1-A	DRIVE SHAFT (L)	1	
1-B	DRIVE SHAFT (R)	1	
2	HOLDER OF CENTER PIN	2	
3	CENTER PIN	2	
4	BALL OF CENTER PIN	2	
5	PIN OF CENTER PIN	2	
6	PISTON	14	
7	COIL SPRING	2	
8	ROTOR	2	
9	VALVE PLATE	1	
10	SERVO PISTON PIN	1	
11	SERVO PISTON	1	
12	RING OF SERVO PISTON	1	
13	HEAD COVER	1	
14	BOLT OF VALVE PLATE	1	
15	LOCK NUT	2	

HANDOK HYDRAULIC



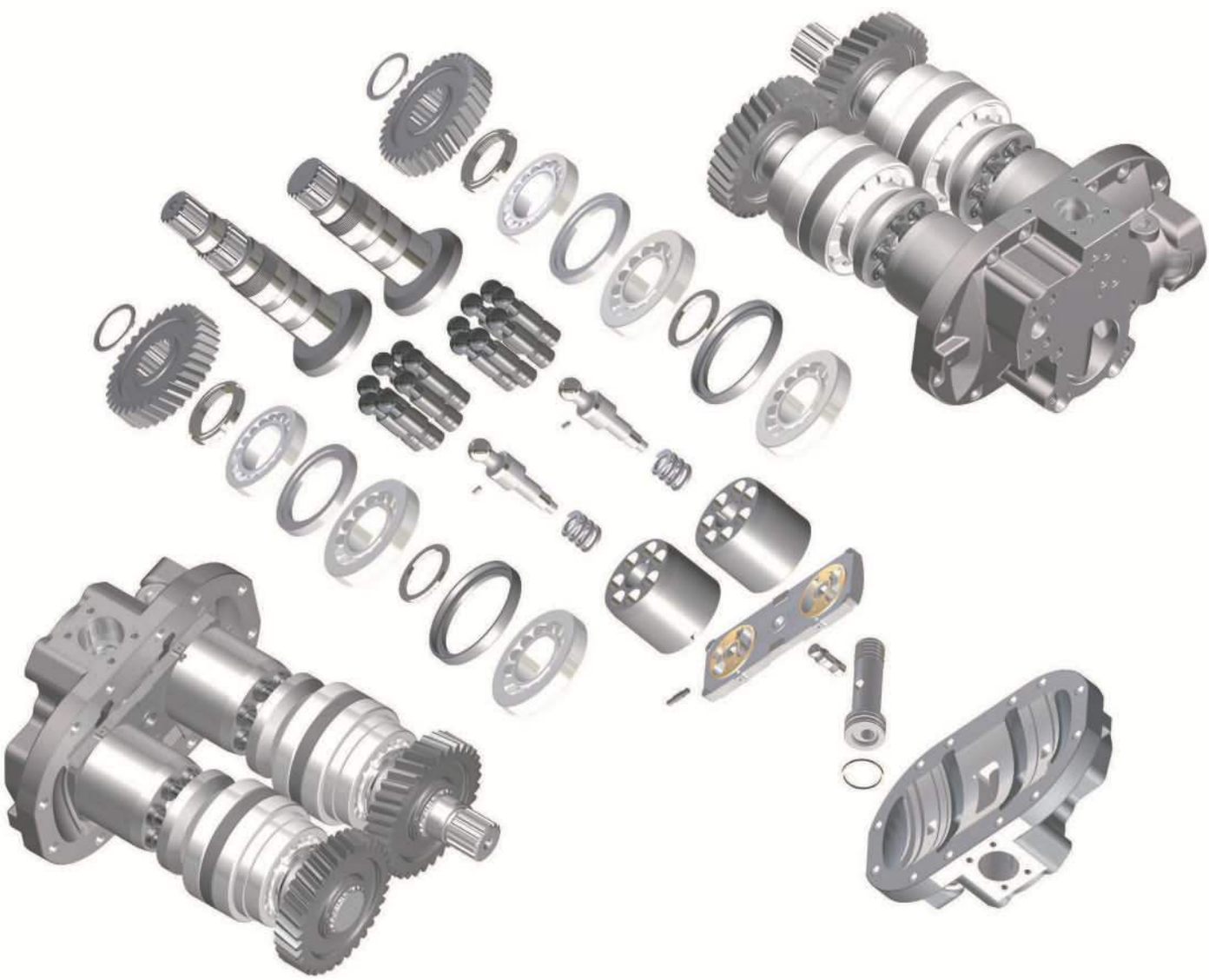

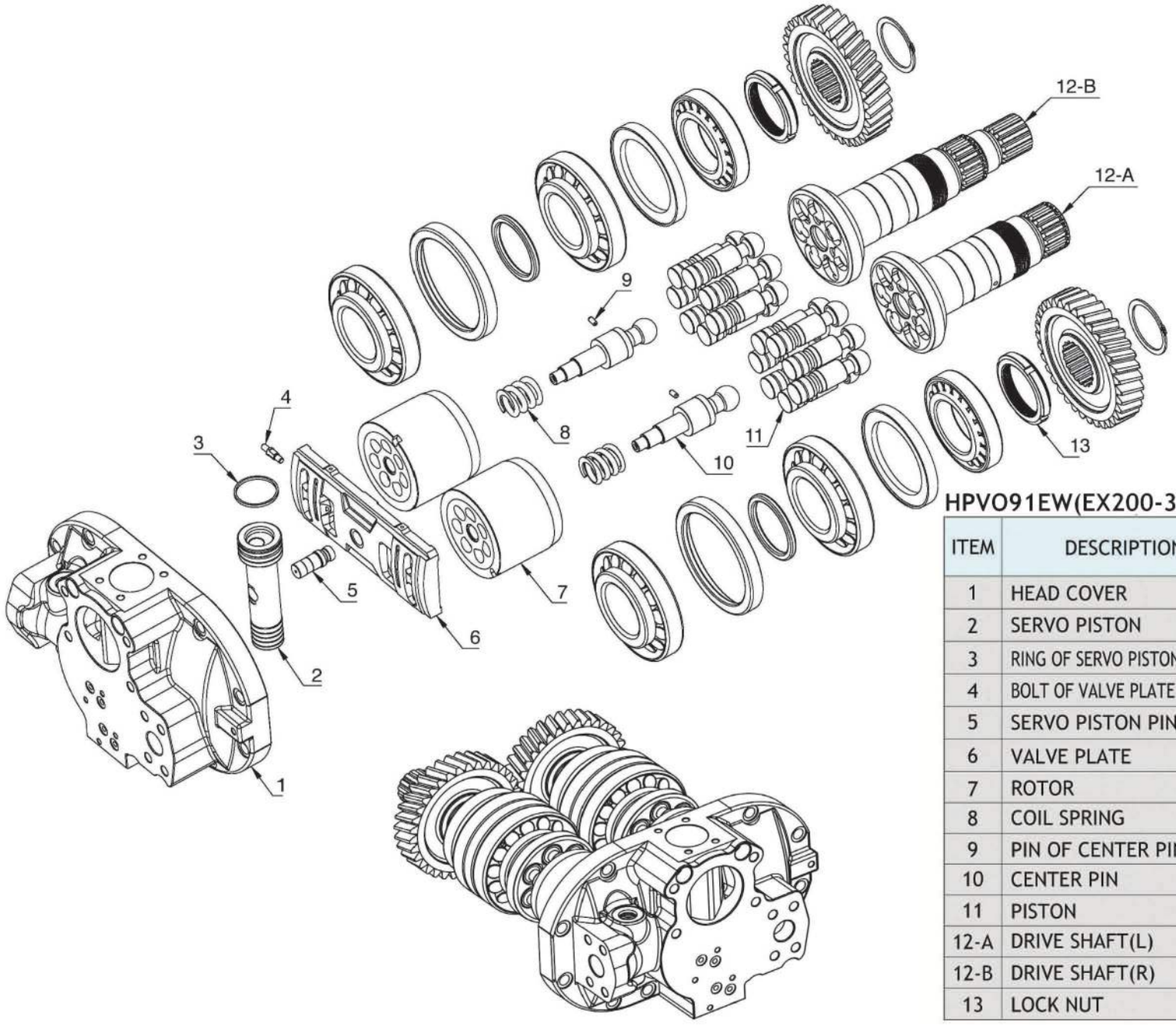

HPVO91EW(EX200-3/220-3)

ITEM	DESCRIPTION	QUANTITY	REMARK
1	HEAD COVER	1	
2	SERVO PISTON	1	
3	RING OF SERVO PISTON	1	
4	BOLT OF VALVE PLATE	1	
5	SERVO PISTON PIN	1	
6	VALVE PLATE	1	
7	ROTOR	2	
8	COIL SPRING	2	
9	PIN OF CENTER PIN	2	
10	CENTER PIN	2	
11	PISTON	14	
12-A	DRIVE SHAFT(L)	1	
12-B	DRIVE SHAFT(R)	1	
13	LOCK NUT	2	

HAN DOK HYDRAULIC

HPV75(PC60-6/7/8)



IT IS DIFFERENT SHAPE BETWEEN PC60-6 AND PC60-7/8

* CAM ROCKER *

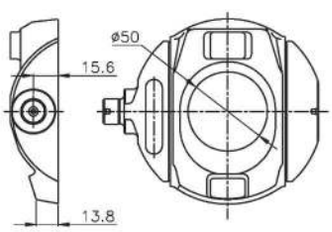

PC60-7/8

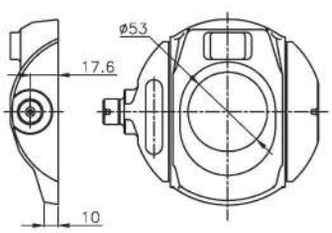

PC60-6

* DRIVE SHAFT *

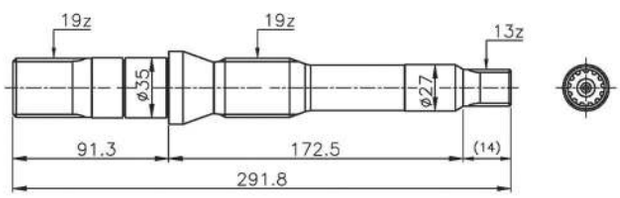

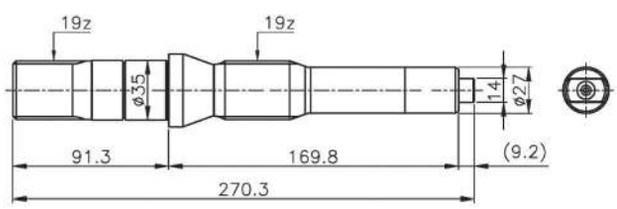

* CRADLE *

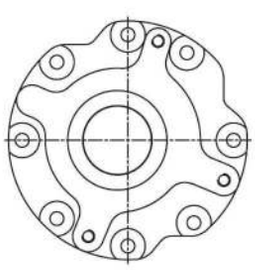

PC60-6

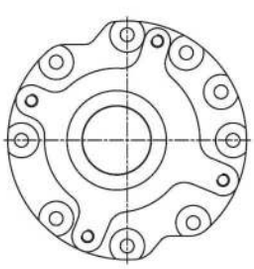

PC60-7/8

* VALVE PLATE *



PC60-6



PC60-7/8

* PISTON *

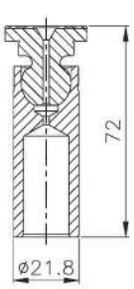

PC60-6

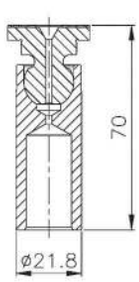

PC60-7/8

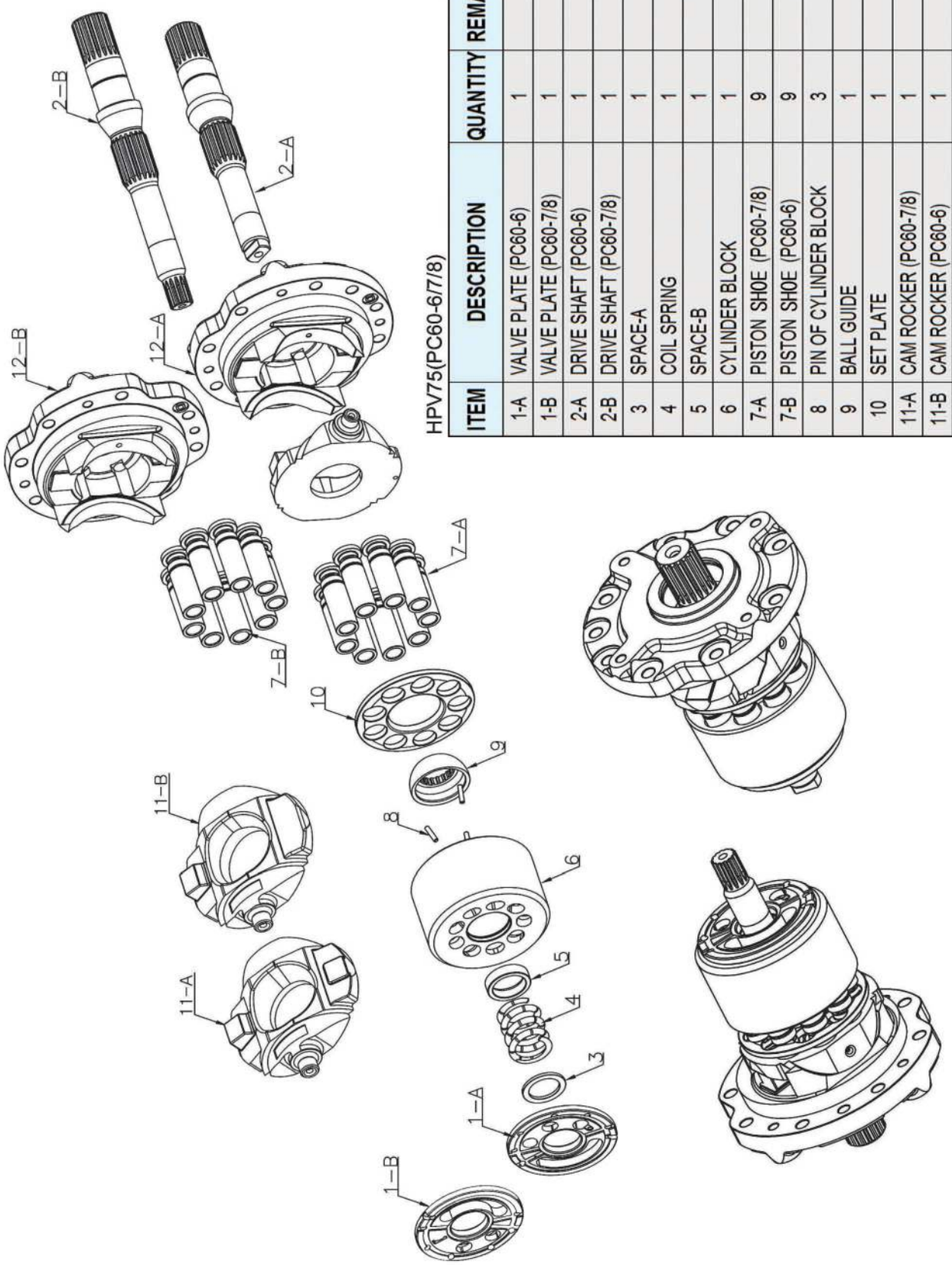

HPV75(PC60-6/7/8)

ITEM	DESCRIPTION	QUANTITY	REMARK
1-A	VALVE PLATE (PC60-6)	1	
1-B	VALVE PLATE (PC60-7/8)	1	
2-A	DRIVE SHAFT (PC60-6)	1	
2-B	DRIVE SHAFT (PC60-7/8)	1	
3	SPACE-A	1	
4	COIL SPRING	1	
5	SPACE-B	1	
6	CYLINDER BLOCK	1	
7-A	PISTON SHOE (PC60-7/8)	9	
7-B	PISTON SHOE (PC60-6)	9	
8	PIN OF CYLINDER BLOCK	3	
9	BALL GUIDE	1	
10	SET PLATE	1	
11-A	CAM ROCKER (PC60-7/8)	1	
11-B	CAM ROCKER (PC60-6)	1	
12-A	CRADLE (PC60-7/8)	1	
12-B	CRADLE (PC60-6)	1	

HANDOK HYDRAULIC

HPV95/132/140/165/375



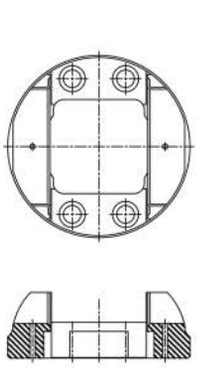

HPV95C
(PC200-6)

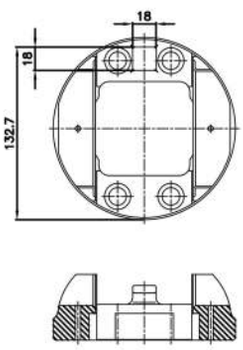

HPV95A
(PC200-7)

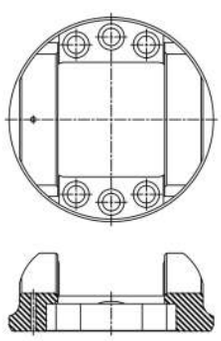

HPV140
(PC300-7&8)

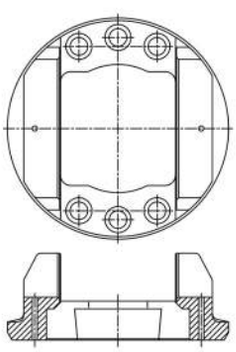

HPV132&165
(PC300-6&400-6/7)

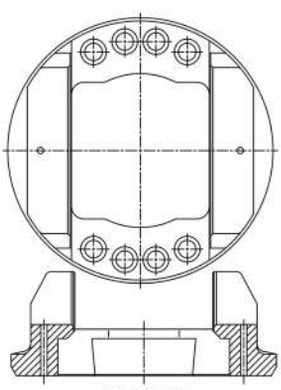

HPV375
(PC800-8)

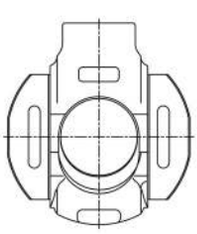

HPV95C
(PC200-6 OLD)

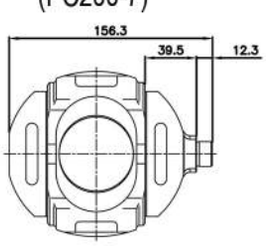

HPV95H
(PC200-6 NEW&PC200-8)

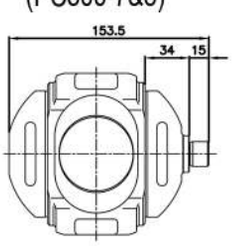

HPV95A
(PC200-7)

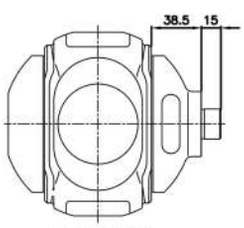

HPV140
(PC300-7&8)

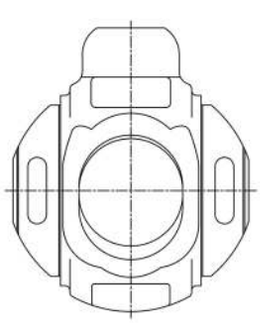

HPV375
(PC800-8)



HPV95C
(PC200-6&7)



HPV95H
(PC200-8)

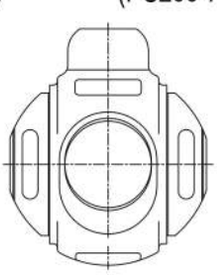

HPV95C
(PC200-6 OLD)

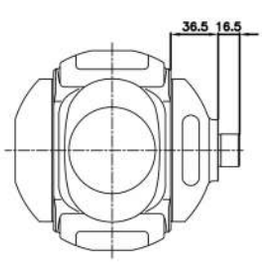

HPV95C
(PC200-6 OLD)

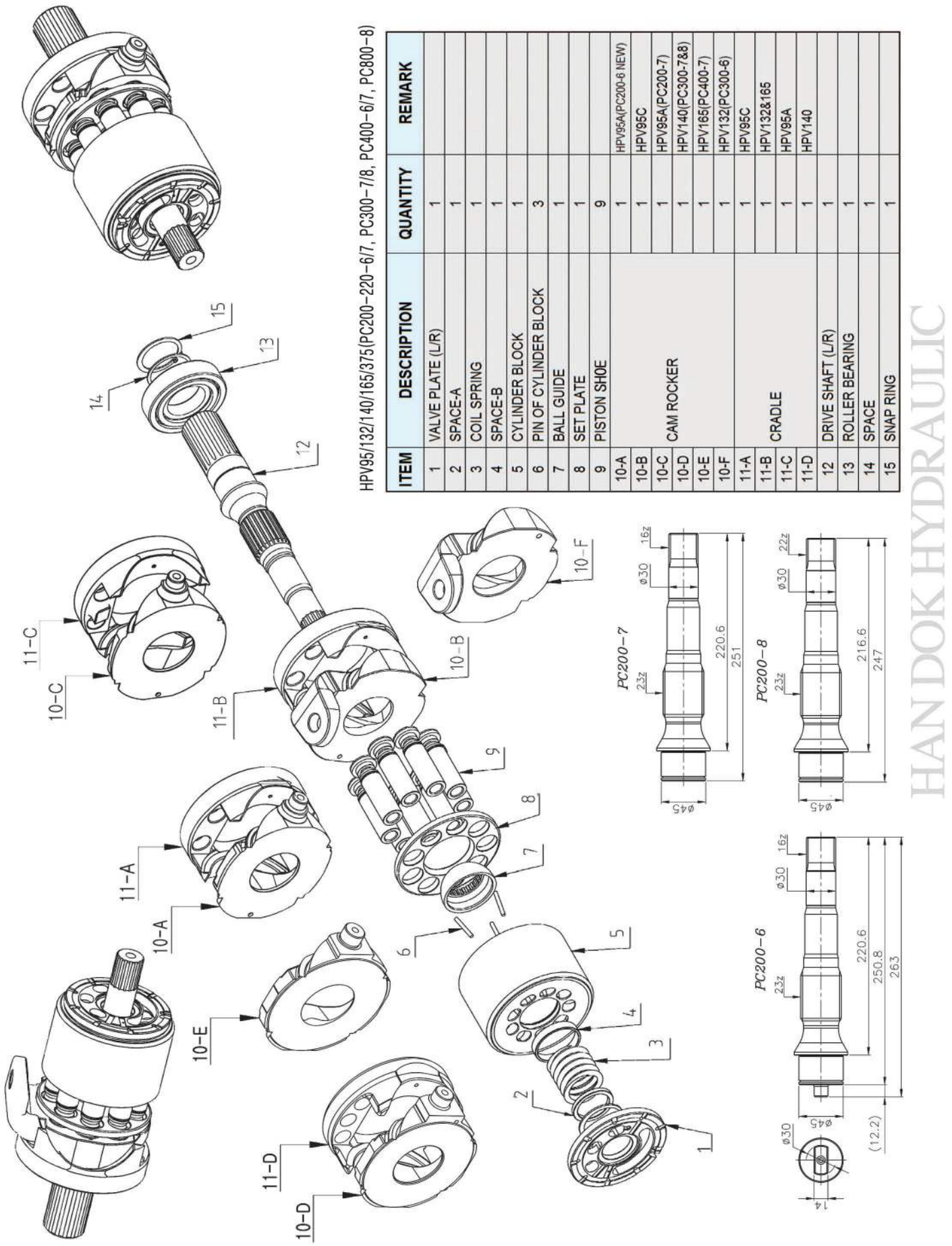

HPV95/132/140/165/375(PC200-220-6/7, PC300-7/8, PC400-6/7, PC800-8)

ITEM	DESCRIPTION	QUANTITY	REMARK
1	VALVE PLATE (L/R)	1	
2	SPACE-A	1	
3	COIL SPRING	1	
4	SPACE-B	1	
5	CYLINDER BLOCK	1	
6	PIN OF CYLINDER BLOCK	3	
7	BALL GUIDE	1	
8	SET PLATE	1	
9	PISTON SHOE	9	
10-A	CAM ROCKER	1	HPV95A(PC200-6 NEW)
10-B		1	HPV95C
10-C		1	HPV95A(PC200-7)
10-D		1	HPV140(PC300-7&8)
10-E		1	HPV165(PC400-7)
10-F		1	HPV132(PC300-6)
11-A	CRADLE	1	HPV95C
11-B		1	HPV132&165
11-C		1	HPV95A
11-D		1	HPV140
12	DRIVE SHAFT (L/R)	1	
13	ROLLER BEARING	1	
14	SPACE	1	
15	SNAP RING	1	

HANDOK HYDRAULIC

HPV112

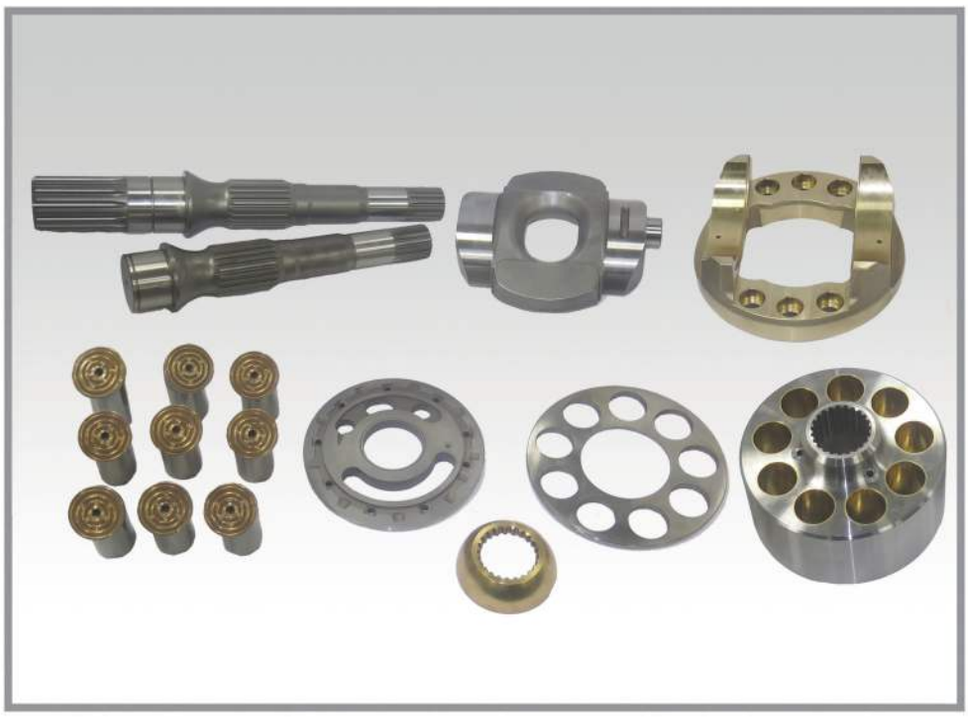

	HPV112(PC210-7K)	HPV165(PC400-7)
PISTON	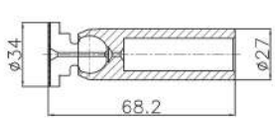	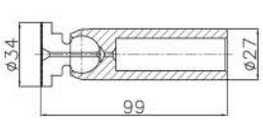
BALL & SET PLATE	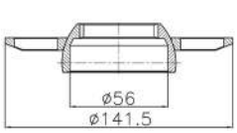	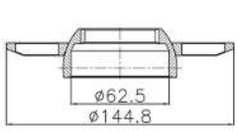
VALVE PLATE	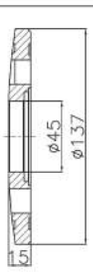	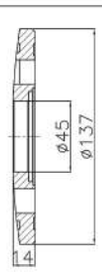

	HPV112(PC210-7K)	HPV165(PC400-7)
CAMROCKER	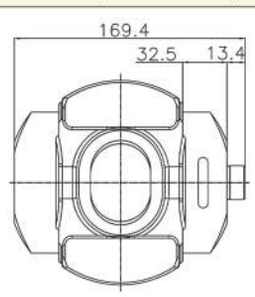	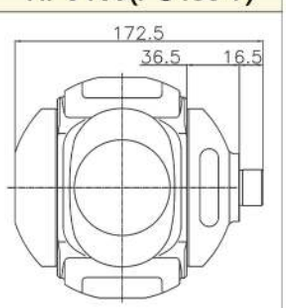
CYLINDER BLOCK	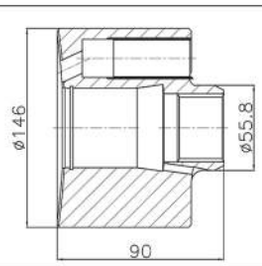	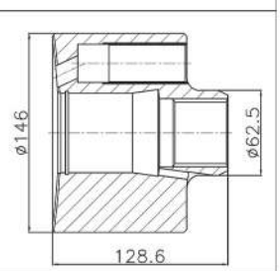

IT IS DIFFERENT SHAPE BETWEEN HPV112(PC210-7K) AND HPV165(PC400-7)

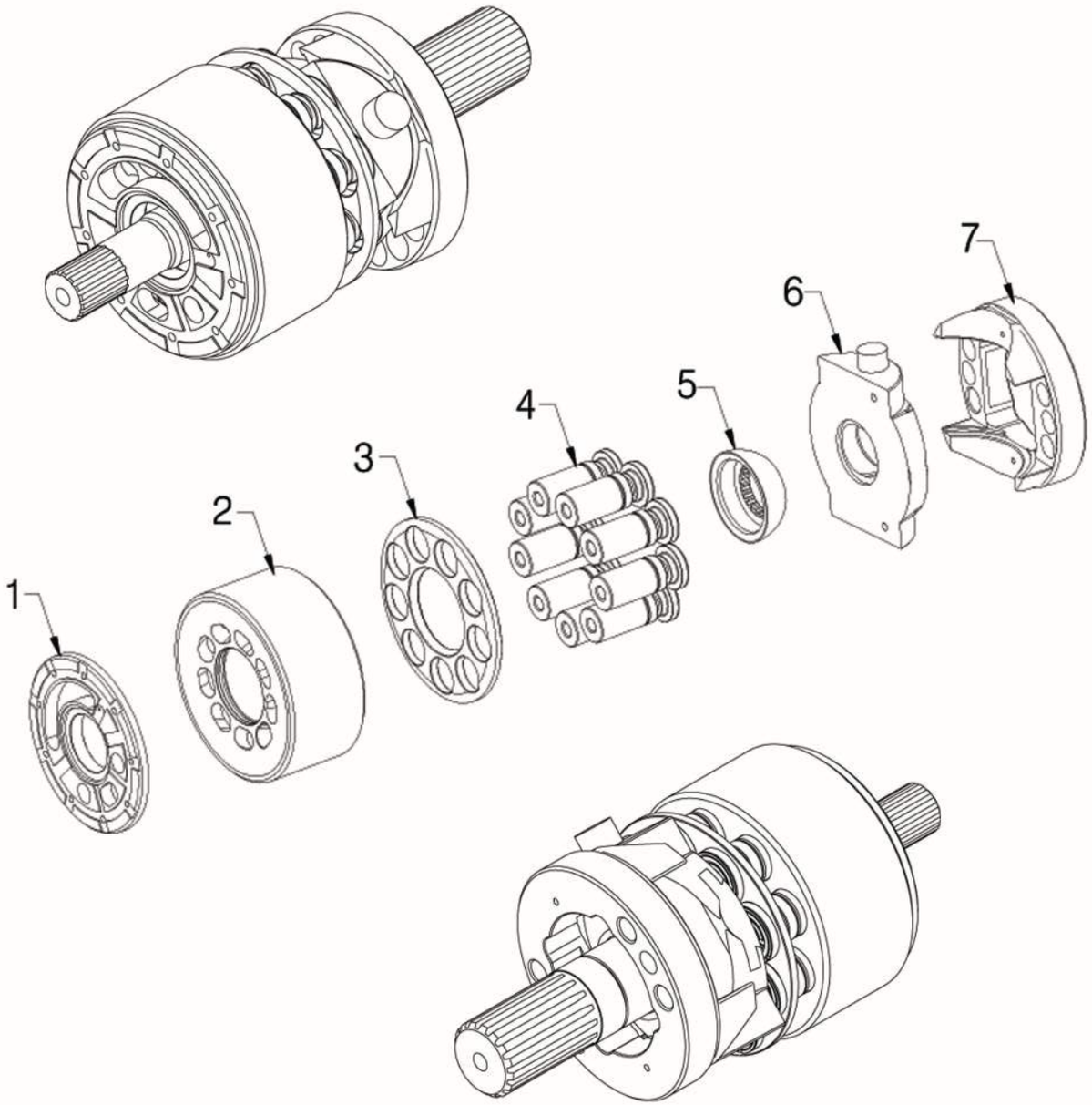

HPV112(PC210-7K)

ITEM	DESCRIPTION	QUANTITY	REMARK
1	VALVE PLATE (L/R)	1	
2	CYLINDER BLOCK	1	
3	SET PLATE	1	
4	PISTON SHOE	9	
5	BALL GUIDE	1	
6	CAM ROCKER	1	
7	CRADLE	1	
8-A	DRIVE SHAFT (L)	1	
8-B	DRIVE SHAFT (R)	1	

HAN DOK HYDRAULIC

HPV95L(PC600-7)





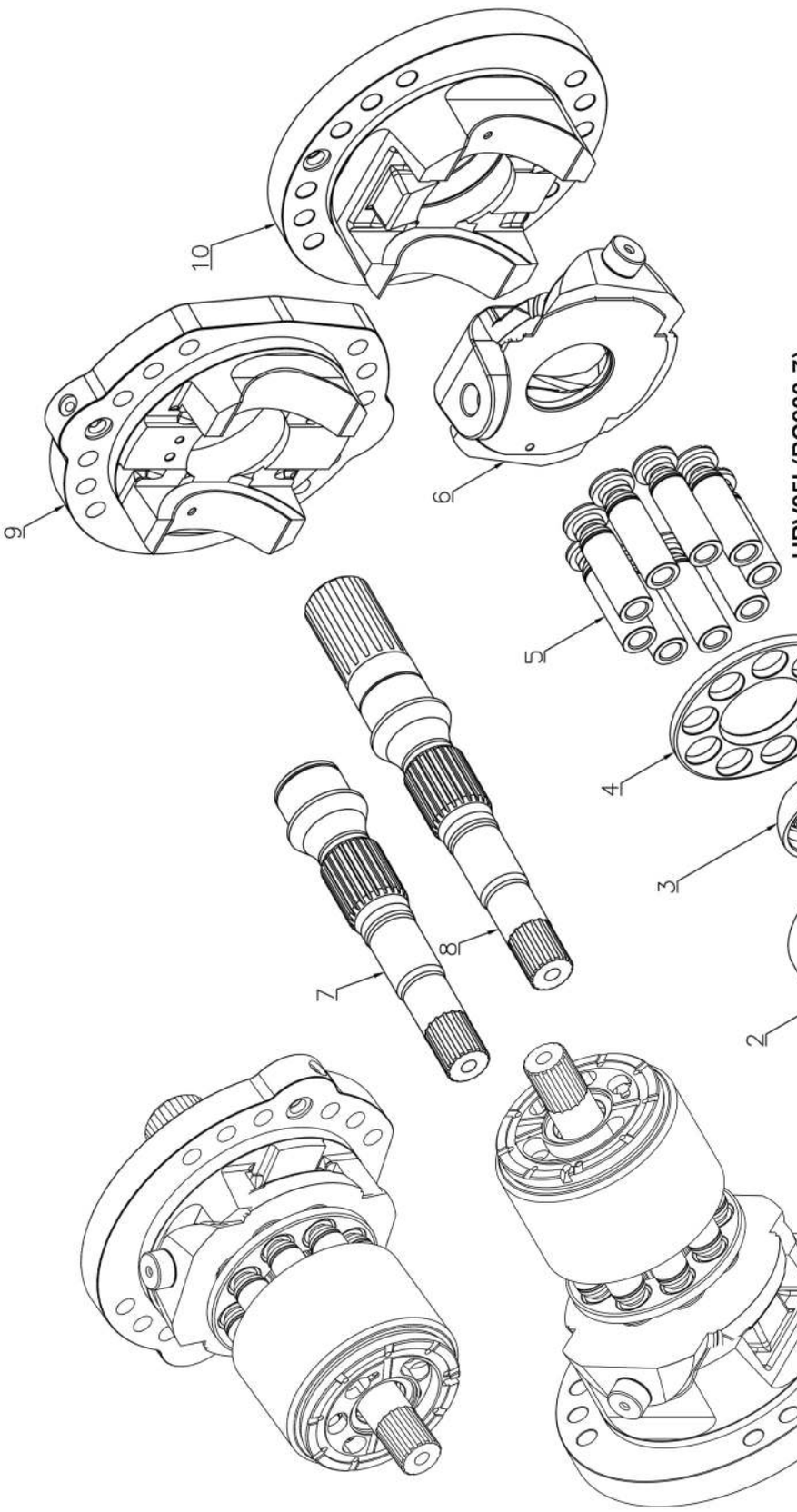

HPV95L(PC600-7)

ITEM	DESCRIPTION	QUANTITY	REMARK
1	VALVE PLATE (L/R)	1	
2	CYLINDER BLOCK	1	
3	BALL GUIDE	1	
4	SET PLATE	1	
5	PISTON SHOE	9	
6	CAM ROCKER	1	
7	DRIVE SHAFT (L)	1	
8	DRIVE SHAFT (R)	1	
9	CRADLE-L	1	
10	CRADLE-R	1	

HANDOK HYDRAULIC

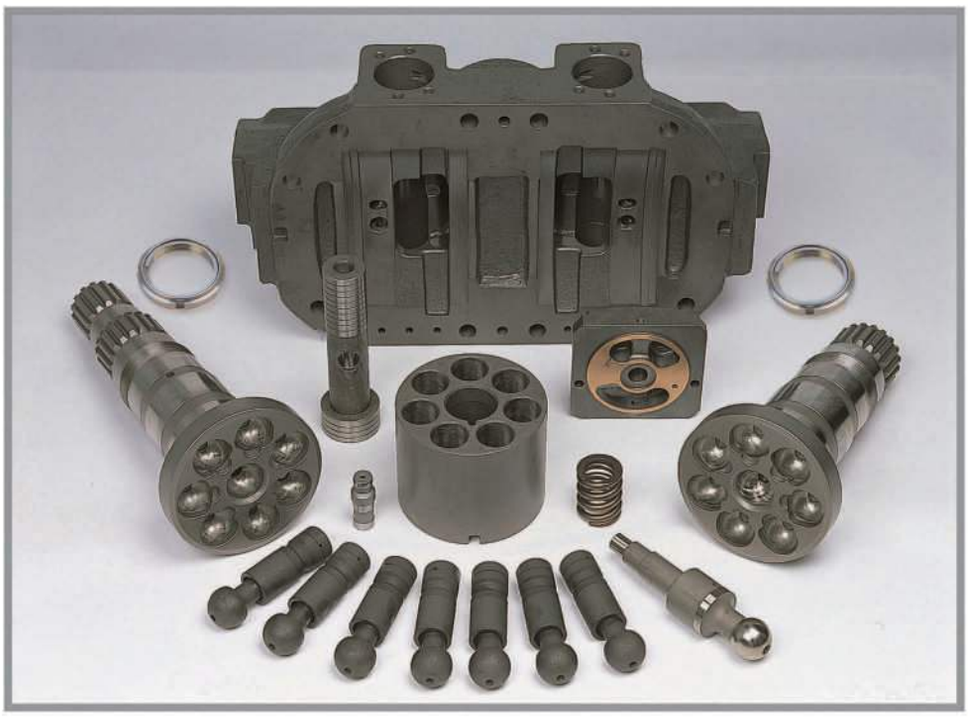

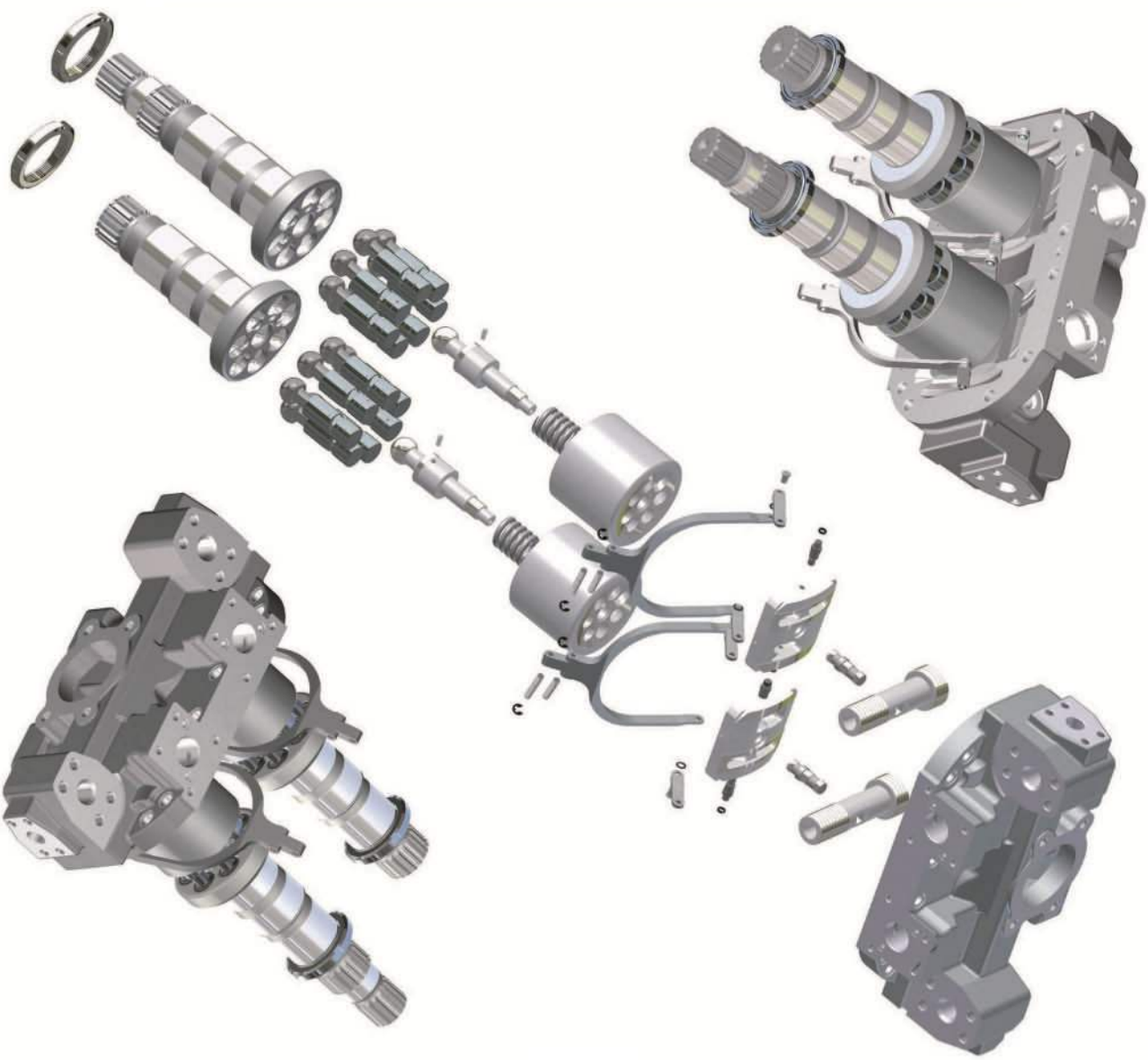

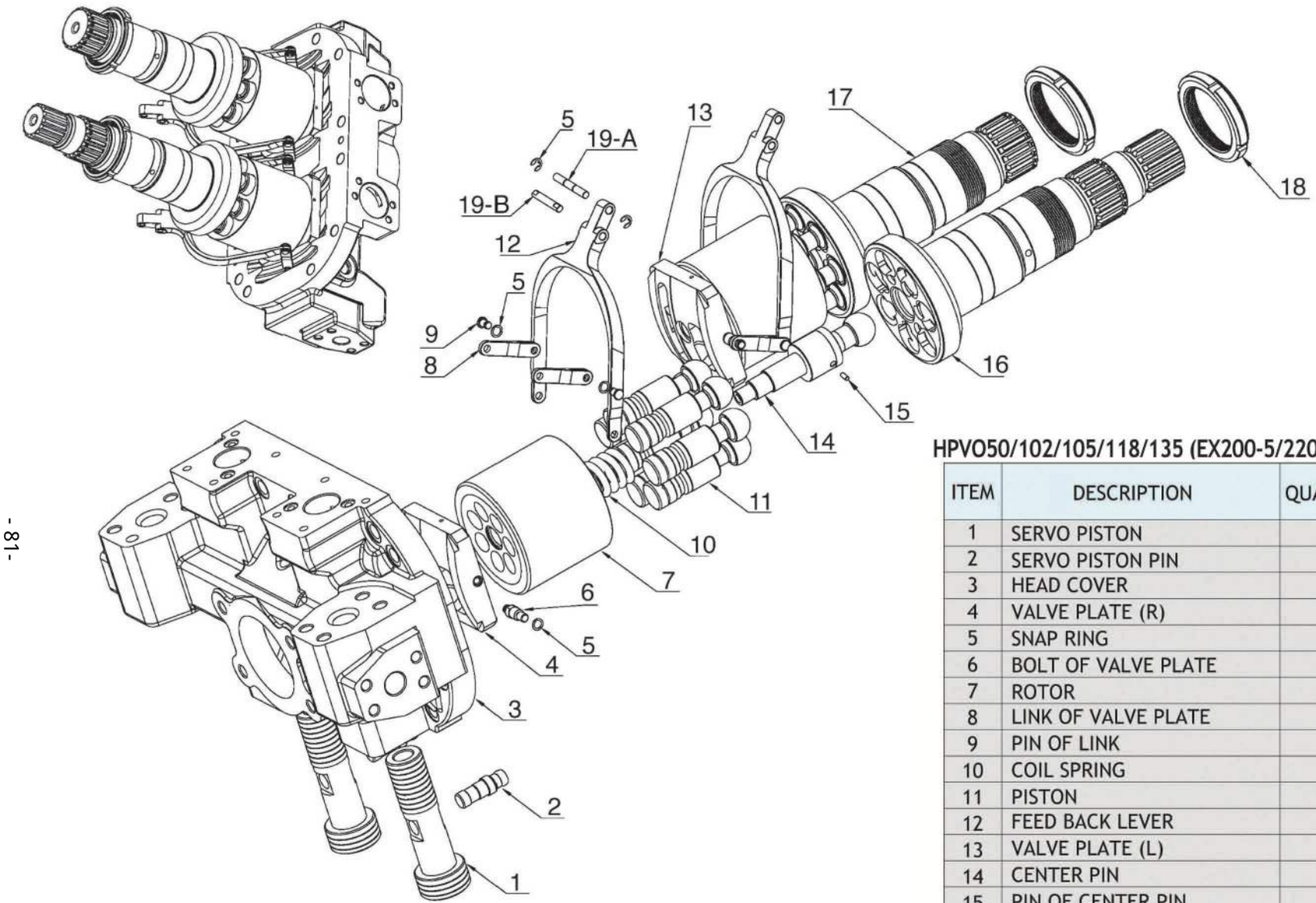

HPVO50/102/105/118/135 (EX200-5/220-5, ZAXIS200/220/230)

ITEM	DESCRIPTION	QUANTITY	REMARK
1	SERVO PISTON	2	
2	SERVO PISTON PIN	2	
3	HEAD COVER	1	
4	VALVE PLATE (R)	1	
5	SNAP RING	12	
6	BOLT OF VALVE PLATE	4	
7	ROTOR	2	
8	LINK OF VALVE PLATE	4	
9	PIN OF LINK	4	
10	COIL SPRING	2	
11	PISTON	14	
12	FEED BACK LEVER	2	
13	VALVE PLATE (L)	1	
14	CENTER PIN	2	
15	PIN OF CENTER PIN	2	
16	DRIVE SHAFT (R)	1	
17	DRIVE SHAFT (L)	1	
18	LOCK NUT	2	
19-A	PIN OF FEED BACK-A	2	
19-B	PIN OF FEED BACK-B	2	

HAN DOK HYDRAULIC



HPV116/145 HEAD COVER & REGULATOR TYPE

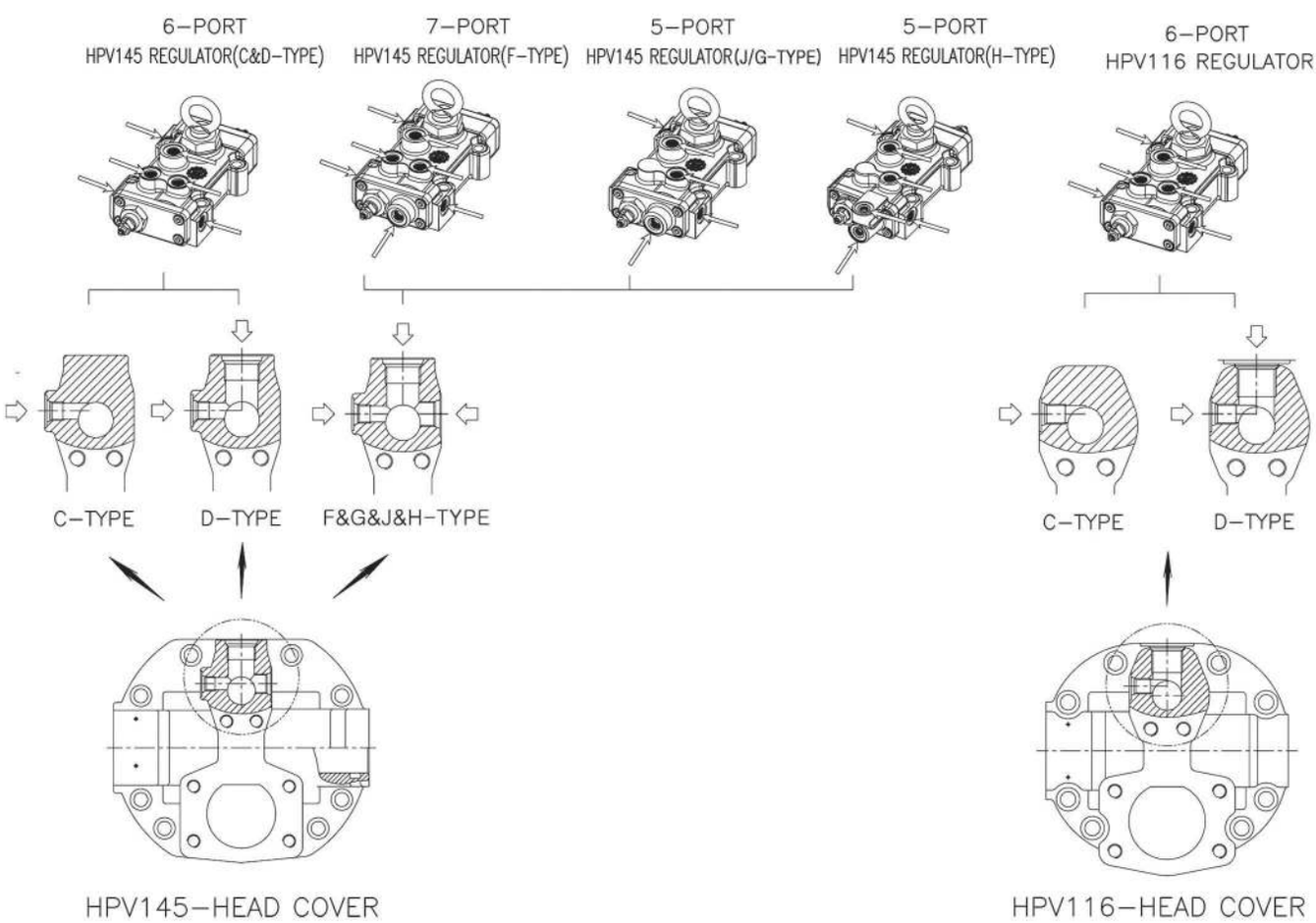

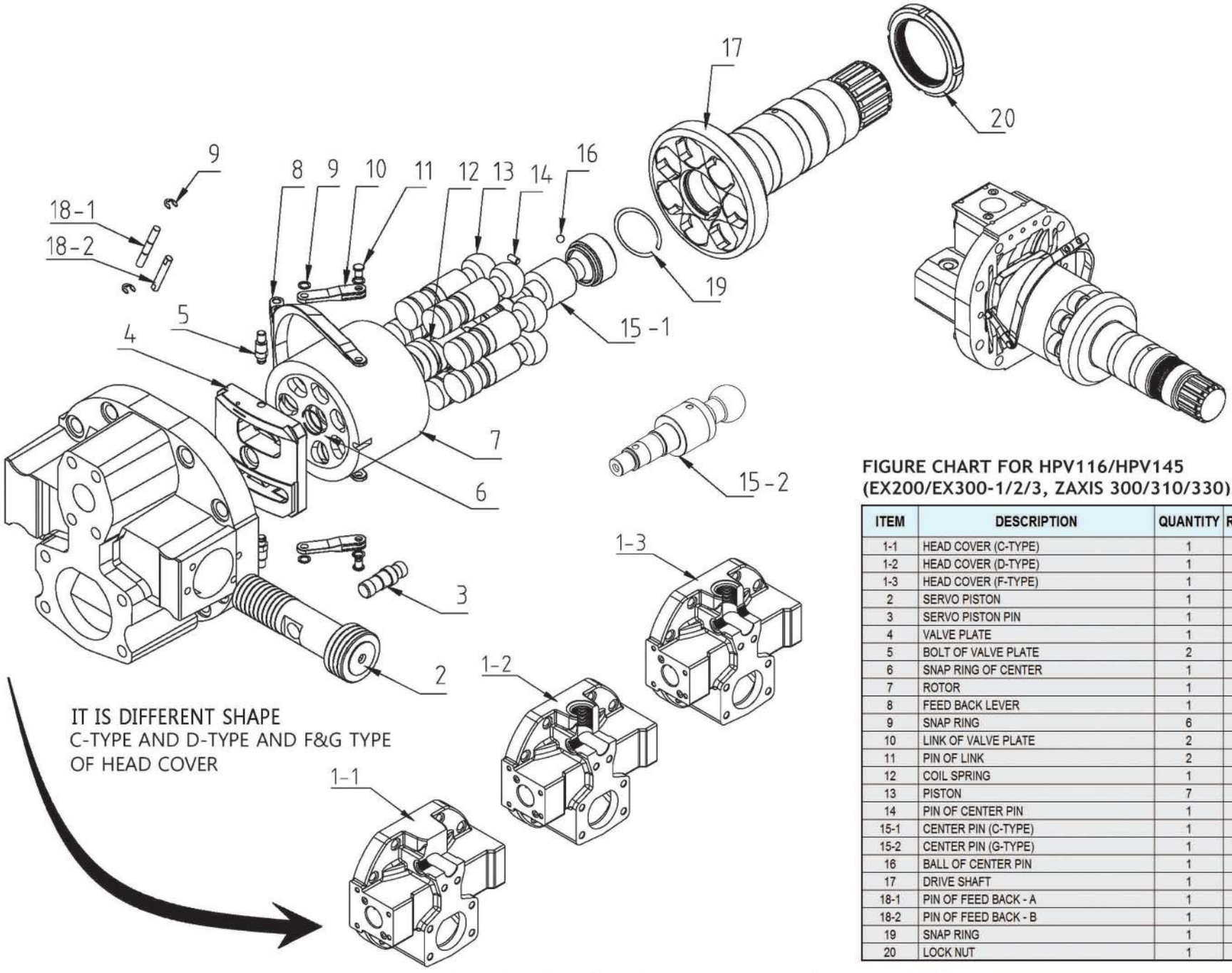

FIGURE CHART FOR HPV116/HPV145
(EX200/EX300-1/2/3, ZAXIS 300/310/330)

ITEM	DESCRIPTION	QUANTITY	REMARK
1-1	HEAD COVER (C-TYPE)	1	
1-2	HEAD COVER (D-TYPE)	1	
1-3	HEAD COVER (F-TYPE)	1	
2	SERVO PISTON	1	
3	SERVO PISTON PIN	1	
4	VALVE PLATE	1	
5	BOLT OF VALVE PLATE	2	
6	SNAP RING OF CENTER	1	
7	ROTOR	1	
8	FEED BACK LEVER	1	
9	SNAP RING	6	
10	LINK OF VALVE PLATE	2	
11	PIN OF LINK	2	
12	COIL SPRING	1	
13	PISTON	7	
14	PIN OF CENTER PIN	1	
15-1	CENTER PIN (C-TYPE)	1	C-TYPE
15-2	CENTER PIN (G-TYPE)	1	G-TYPE
16	BALL OF CENTER PIN	1	
17	DRIVE SHAFT	1	
18-1	PIN OF FEED BACK - A	1	
18-2	PIN OF FEED BACK - B	1	
19	SNAP RING	1	
20	LOCK NUT	1	

HAN DOK HYDRAULIC



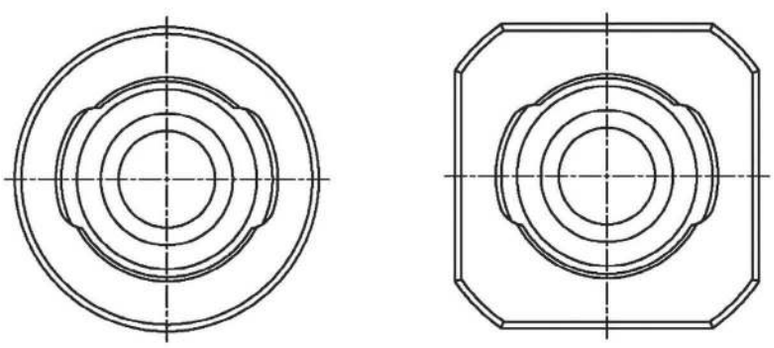

ROUND TYPE　　SQUARE TYPE

IT IS DIFFERENT SHAPE BETWEEN
ROUND TYPE AND SQUARE TYPE OF JOINT BEARING

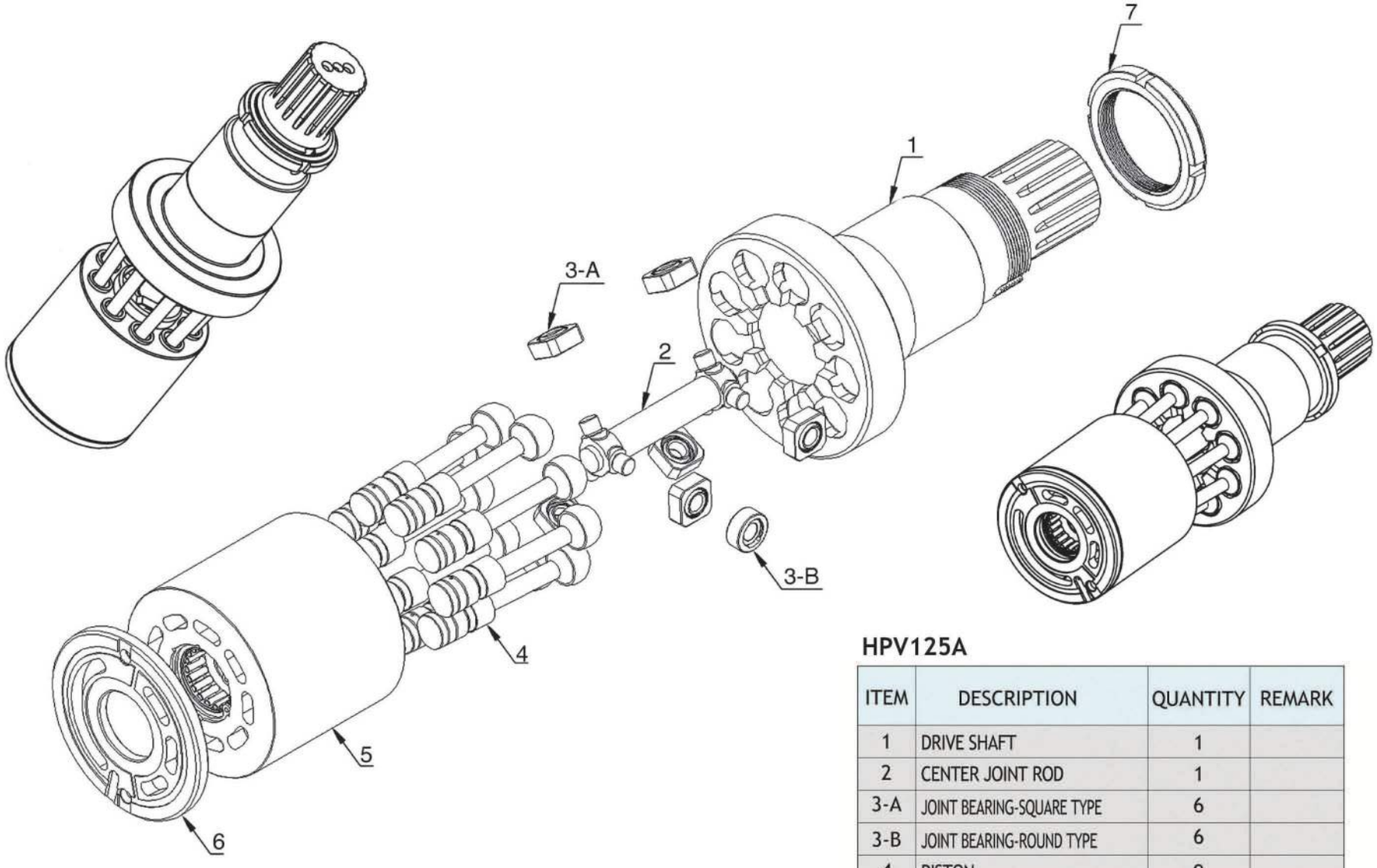

HPV125A

ITEM	DESCRIPTION	QUANTITY	REMARK
1	DRIVE SHAFT	1	
2	CENTER JOINT ROD	1	
3-A	JOINT BEARING-SQUARE TYPE	6	
3-B	JOINT BEARING-ROUND TYPE	6	
4	PISTON	9	
5	ROTOR	1	
6	VALVE PLATE	1	
7	LOCK NUT	1	

HAN DOK HYDRAULIC



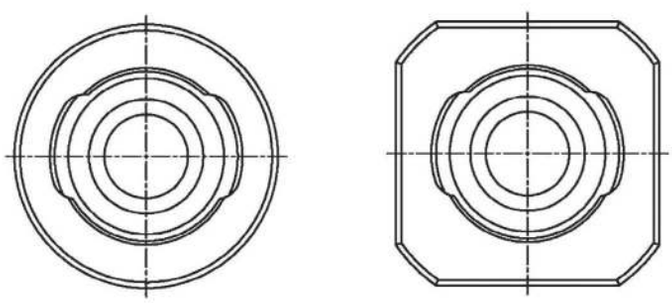

ROUND TYPE　　SQUARE TYPE

IT IS DIFFERENT SHAPE BETWEEN
ROUND TYPE AND SQUARE TYPE OF JOINT BEARING

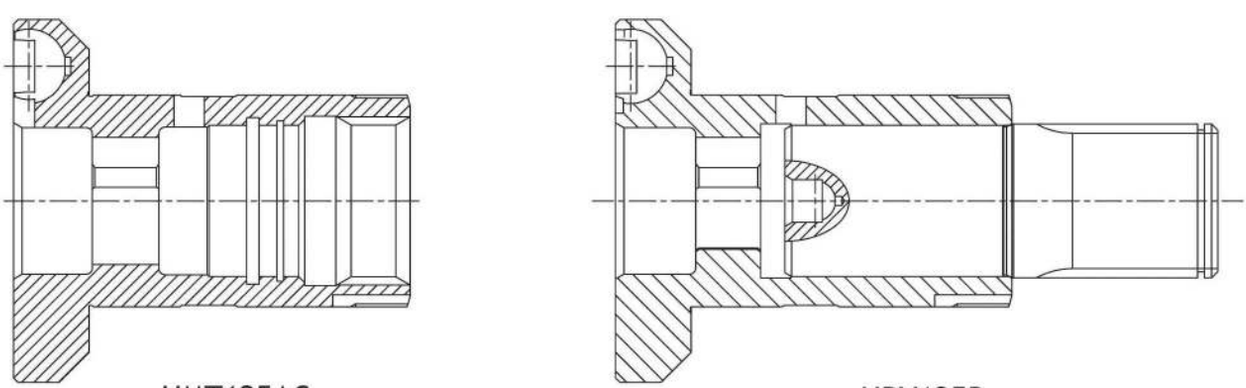

HMT125AC　　HPV125B

IT IS DIFFERENT SHAPE BETWEEN HMT125AC AND HPV125B OF DRIVE SHAFT

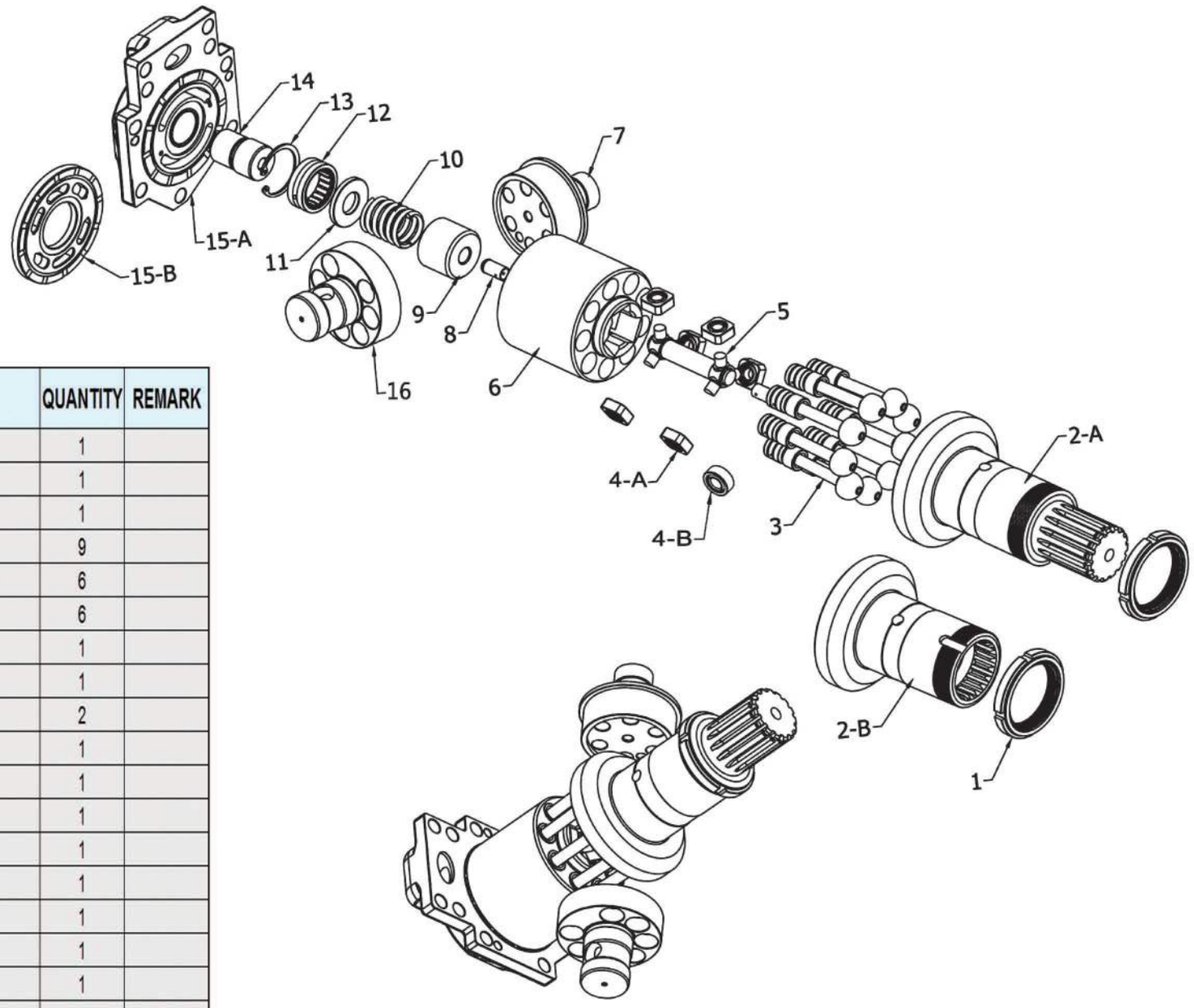

HPV125B/HMT125AC

ITEM	DESCRIPTION	QUANTITY	REMARK
1	LOCK NUT	1	
2-A	DRIVE SHAFT (HPV125B)	1	
2-B	DRIVE SHAFT(HMT125AC)	1	
3	PISTON	9	
4-A	JOINT BEARING - SQUARE TYPE	6	
4-B	JOINT BEARING - ROUND TYPE	6	
5	CENTER JOINT ROD	1	
6	ROTOR	1	
7	AXLE SHAFT	2	
8	JOINT STOPPER	1	
9	HOLDER	1	
10	COIL SPRING OF ROTOR	1	
11	WASHER	1	
12	NEEDLE BEARING	1	
13	SNAP RING	1	
14	CENTER SHAFT	1	
15-A	HEAD VALVE	1	
15-B	VALVE PLATE	1	
16	ROTARY JOINT	1	

HAN DOK HYDRAULIC

HPVO118T, HPVO145T(TRIPLE TYPE)



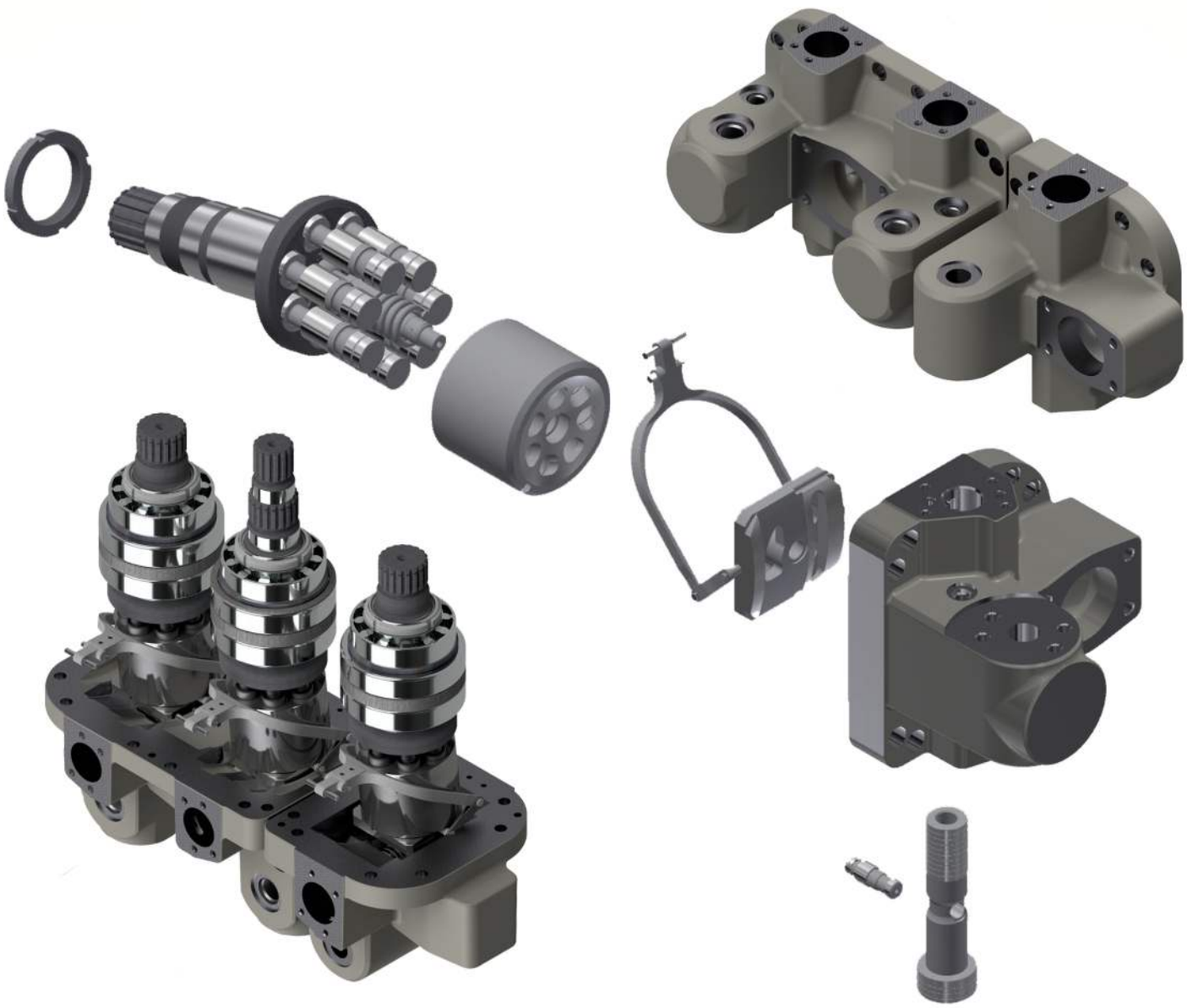

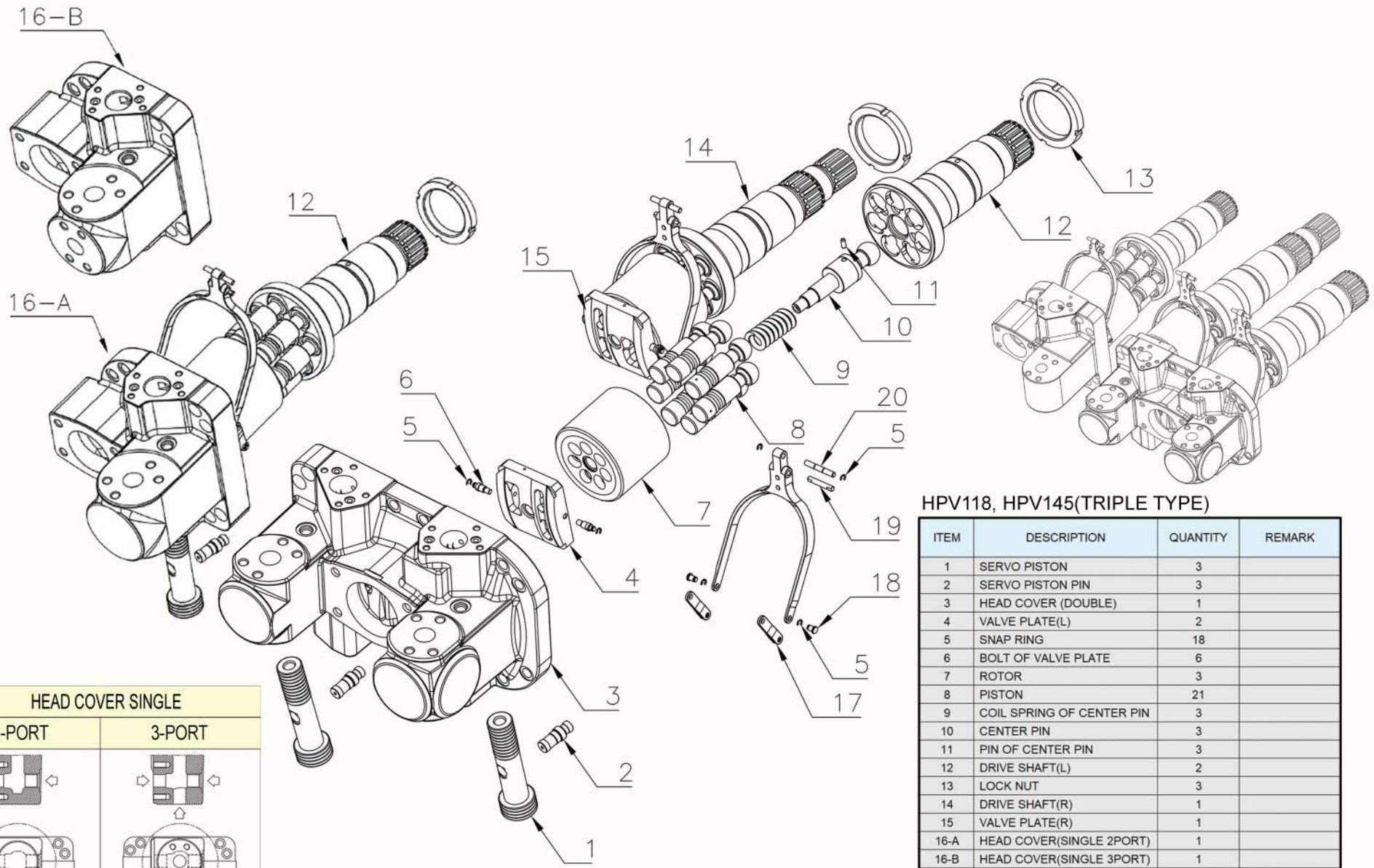

HPV118, HPV145(TRIPLE TYPE)

ITEM	DESCRIPTION	QUANTITY	REMARK
1	SERVO PISTON	3	
2	SERVO PISTON PIN	3	
3	HEAD COVER (DOUBLE)	1	
4	VALVE PLATE(L)	2	
5	SNAP RING	18	
6	BOLT OF VALVE PLATE	6	
7	ROTOR	3	
8	PISTON	21	
9	COIL SPRING OF CENTER PIN	3	
10	CENTER PIN	3	
11	PIN OF CENTER PIN	3	
12	DRIVE SHAFT(L)	2	
13	LOCK NUT	3	
14	DRIVE SHAFT(R)	1	
15	VALVE PLATE(R)	1	
16-A	HEAD COVER(SINGLE 2PORT)	1	
16-B	HEAD COVER(SINGLE 3PORT)	1	
17	LINK OF CENTER PIN	6	
18	PIN OF LINK	6	
19	PIN OF FEED BACK-A	3	
20	PIN OF FEED BACK-B	3	

HEAD COVER SINGLE

2-PORT	3-PORT
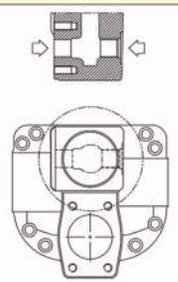	

HAN DOK HYDRAULIC



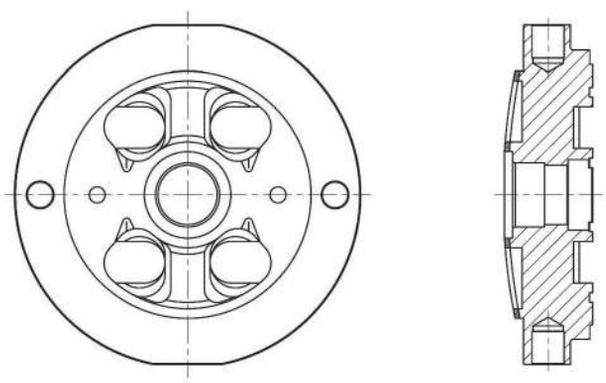

HMGF-TYPE

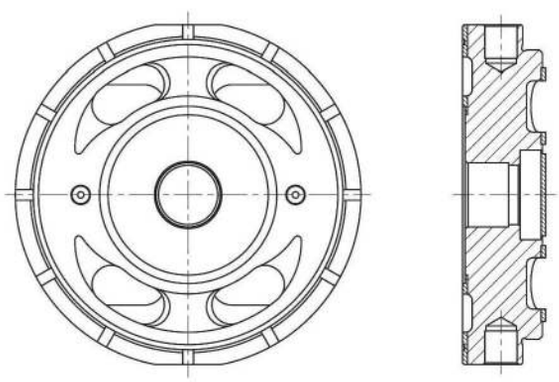

HMGC-TYPE

IT IS DIFFERENT SHAPE HMGC AND HMGF OF VALVE

	HMGC16/32/48	HMGF35 (FLAT TYPE)	HMGF17/36/49/57 (ROUND TYPE)
HMGC HMGF ROTOR & V/PLATE	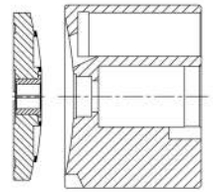	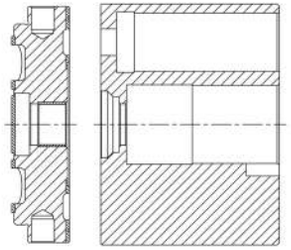	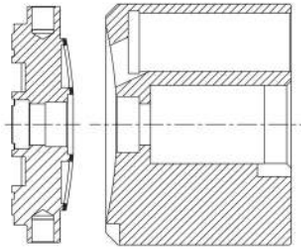

HMGC16/32/48, HMGF17/35/36/49/57

ITEM	DESCRIPTION	QUANTITY	REMARK
1	SEPARATION PLATE	3	
2	FRICTION PLATE	2	
3	DRIVE SHAFT	1	
4	CENTER PIN	1	
5	PIN OF CENTER PIN	1	
6	COIL SPRING	1	
7	PISTON	7	
8	ROTOR	1	
9	VALVE PLATE	1	HMGC SERIES
10	VALVE PLATE	1	HMGF35
11	VALVE PLATE	1	HMGF36/49/57
12	LOCK NUT	1	

HAN DOK HYDRAULIC



IT IS DIFFERENT SPACE THICKNESS

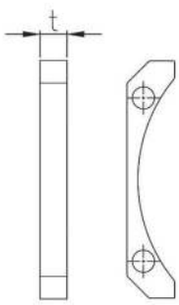

TYPE	SPACE THICKNESS(t)		
	A	B	C
HPV35 (PC60-3/5)	8.00	8.03	8.05
HPV55 (PC120/120-3/5)	9.44	9.46	9.475
HPV70/90 (PC200/220-3/5)	11.54	11.56	11.575
HPV160 (PC300/400-3/5)	13.54	13.56	13.575

IT IS DIFFERENT VALVE PLATE & CRADLE SHAPE(HPV35/55/70/90/160)

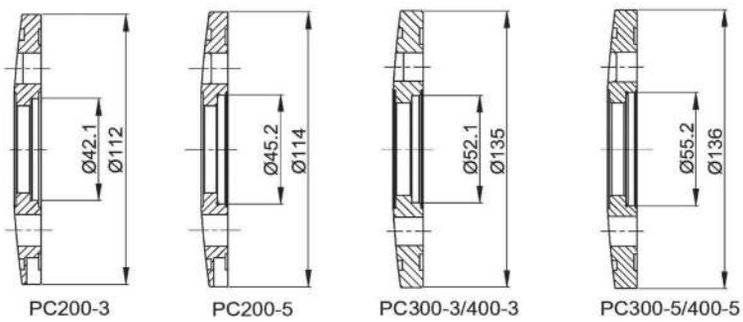

(CW) *(CCW)*

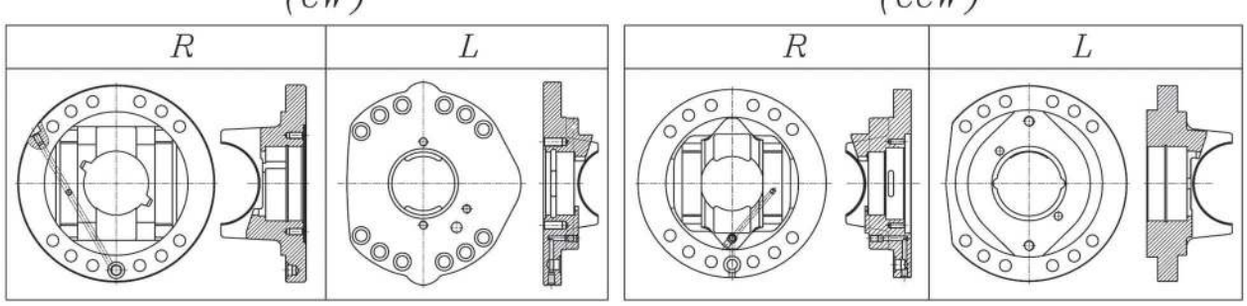

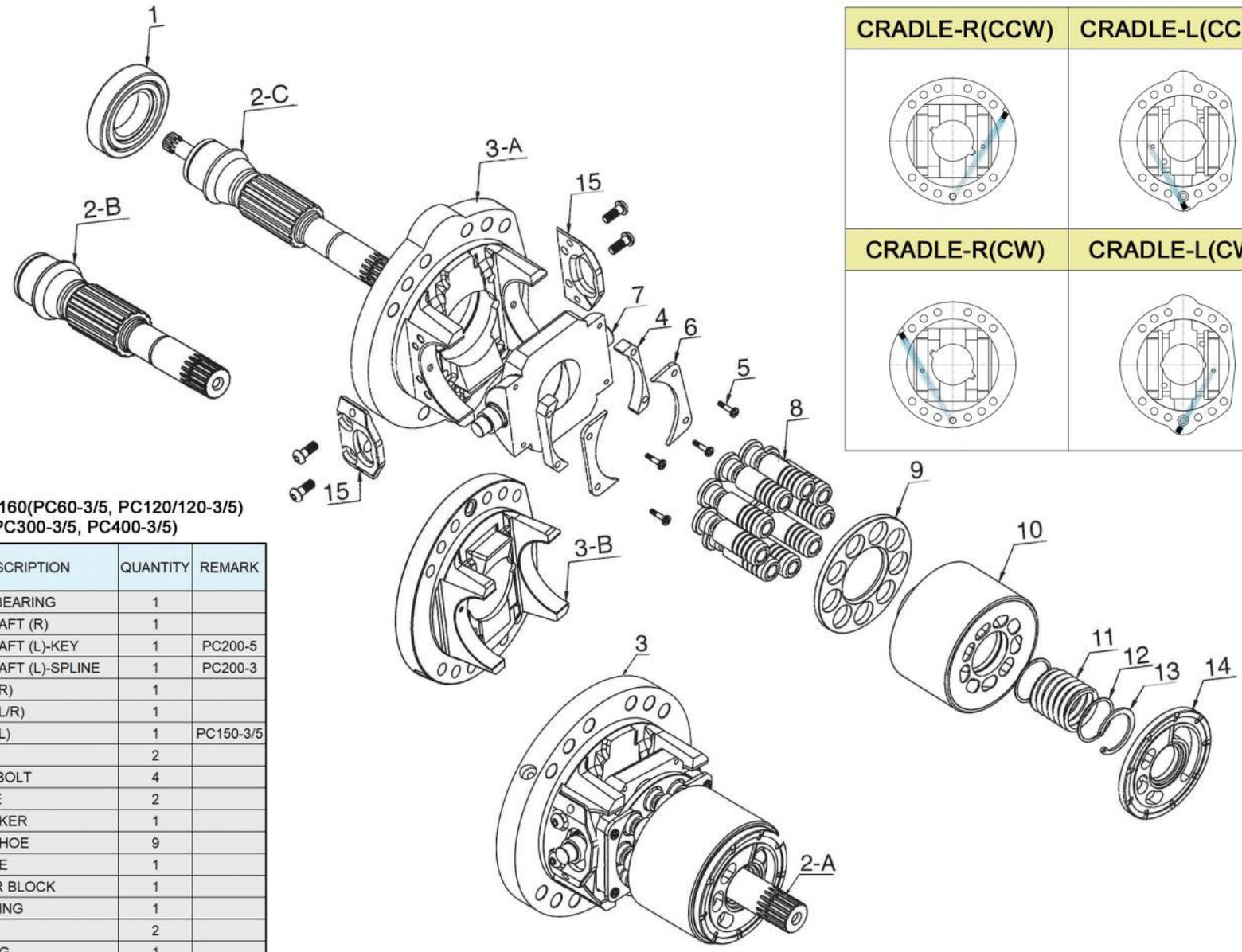

IT IS DIFFERENT SHAPE BETWEEN
CCW AND CW TYPE OF HPV90(PC200-3) CRADLE

CRADLE-R(CCW)	CRADLE-L(CCW)
CRADLE-R(CW)	**CRADLE-L(CW)**

HPV35/55/70/90/160(PC60-3/5, PC120/120-3/5)
PC200/220-3/5, PC300-3/5, PC400-3/5)

ITEM	DESCRIPTION	QUANTITY	REMARK
1	ROLLER BEARING	1	
2-A	DRIVE SHAFT (R)	1	
2-B	DRIVE SHAFT (L)-KEY	1	PC200-5
2-C	DRIVE SHAFT (L)-SPLINE	1	PC200-3
3	CRADLE (R)	1	
3-A	CRADLE (L/R)	1	
3-B	CRADLE (L)	1	PC150-3/5
4	SPACE	2	
5	SOCKET BOLT	4	
6	FIX PLATE	2	
7	CAM ROCKER	1	
8	PISTON SHOE	9	
9	SET PLATE	1	
10	CYLINDER BLOCK	1	
11	COIL SPRING	1	
12	WASHER	2	
13	SNAP RING	1	
14	VALVE PLATE (L/R)	1	
15	THRUST BEARING	2	

HAN DOK HYDRAULIC



IT IS DIFFERENT SHAPE BETWEEN
HPV091ES TYPE AND HPV091DS TYPE OF VALVE PLATE

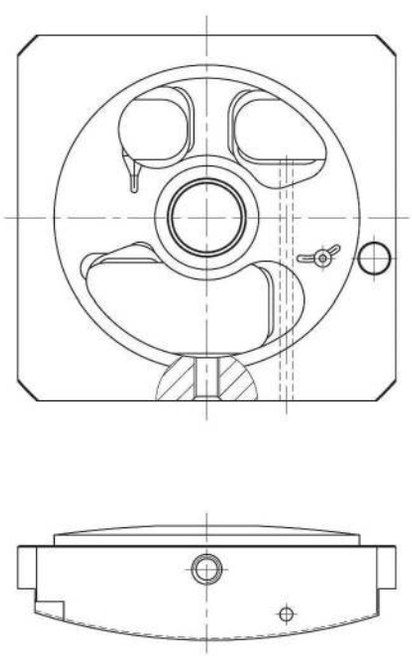

HPV091DS

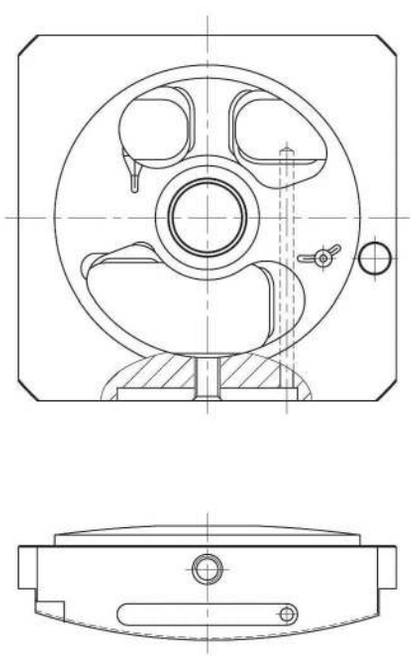

HPV091ES

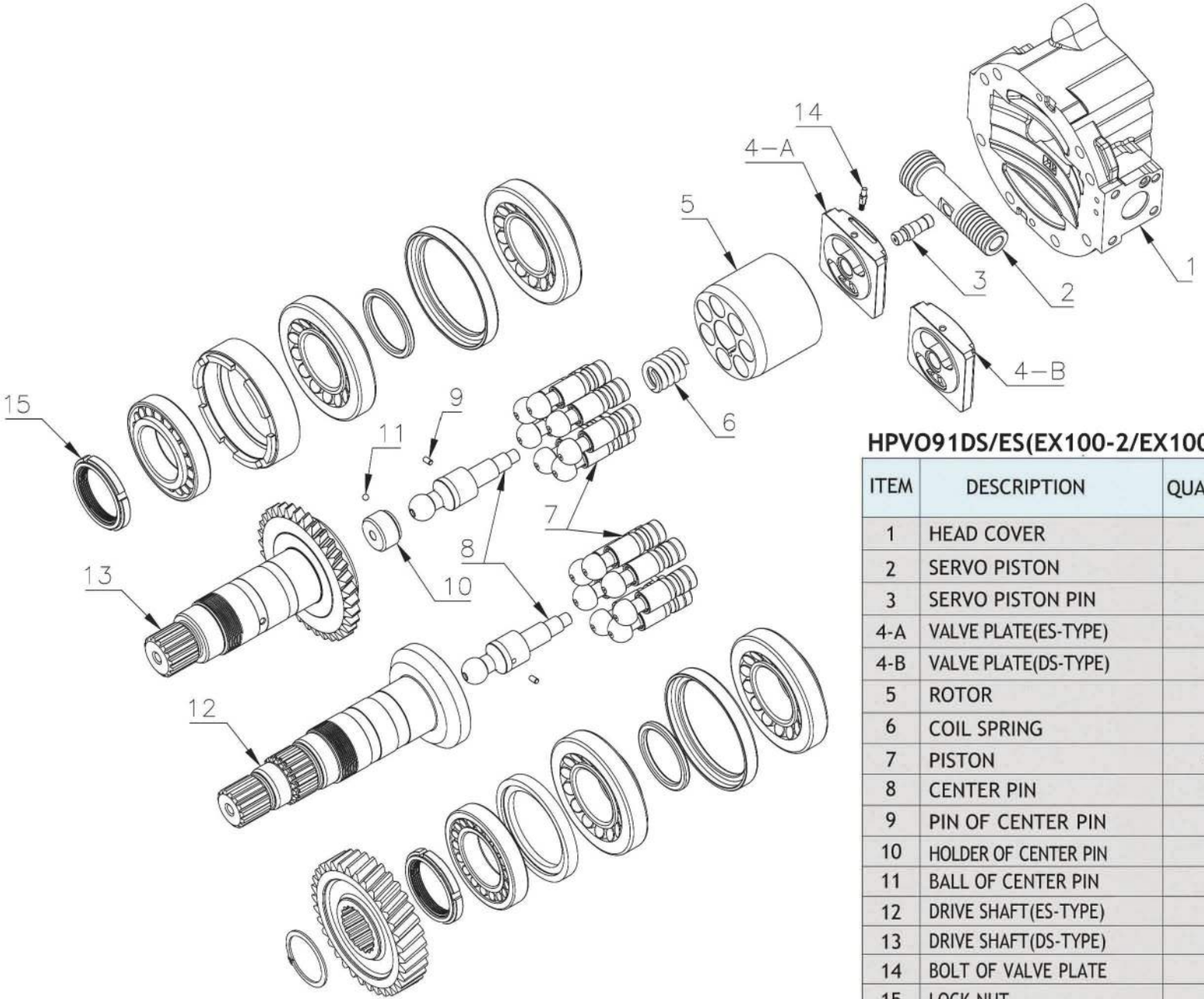

HPVO91DS/ES(EX100-2/EX100-3/5)

ITEM	DESCRIPTION	QUANTITY	REMARK
1	HEAD COVER	1	
2	SERVO PISTON	1	
3	SERVO PISTON PIN	1	
4-A	VALVE PLATE(ES-TYPE)	1	
4-B	VALVE PLATE(DS-TYPE)	1	
5	ROTOR	1	
6	COIL SPRING	1	
7	PISTON	14	
8	CENTER PIN	2	
9	PIN OF CENTER PIN	2	
10	HOLDER OF CENTER PIN	1	DS-TYPE
11	BALL OF CENTER PIN	1	DS-TYPE
12	DRIVE SHAFT(ES-TYPE)	1	
13	DRIVE SHAFT(DS-TYPE)	1	
14	BOLT OF VALVE PLATE	1	
15	LOCK NUT	2	

HAN DOK HYDRAULIC



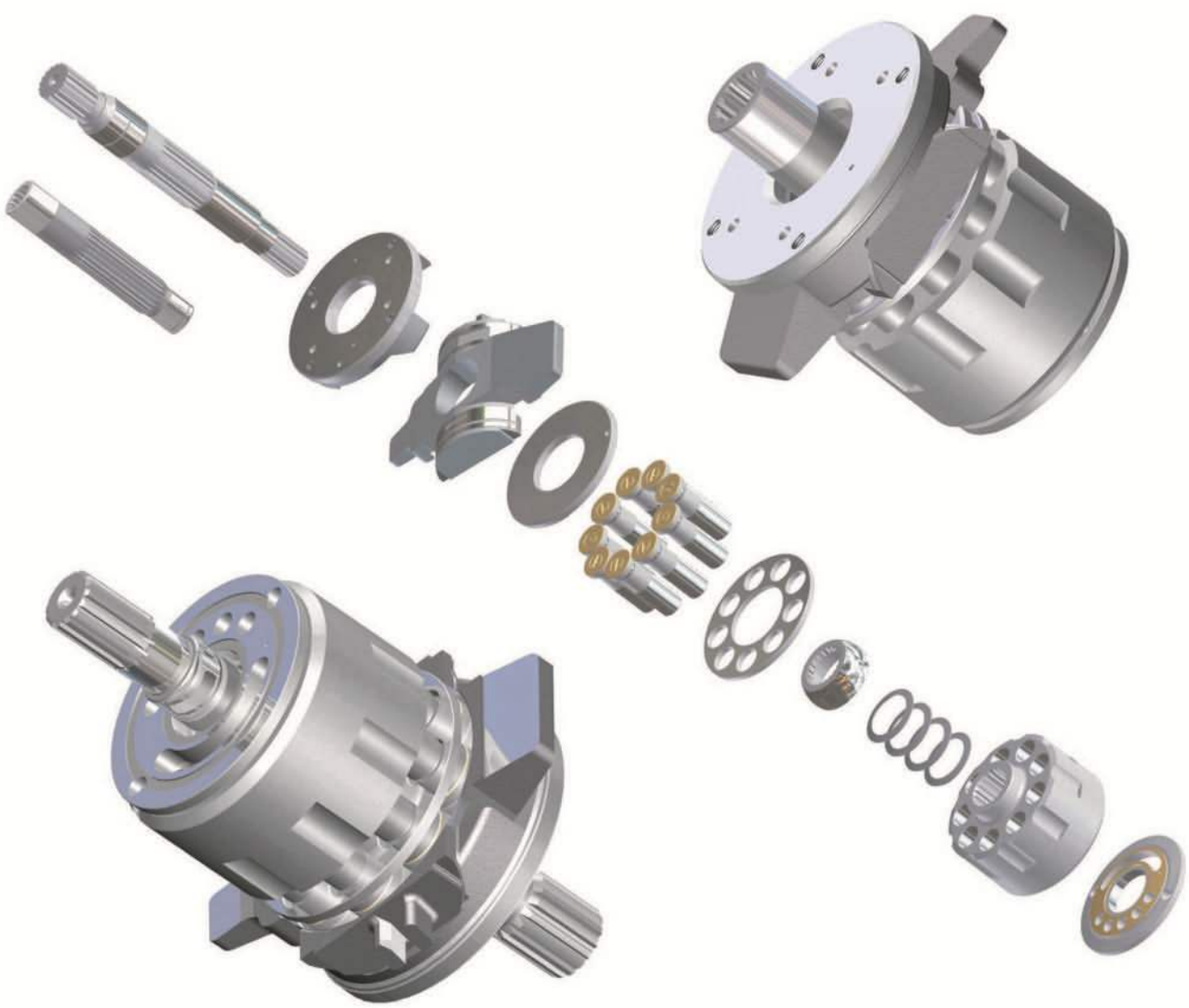

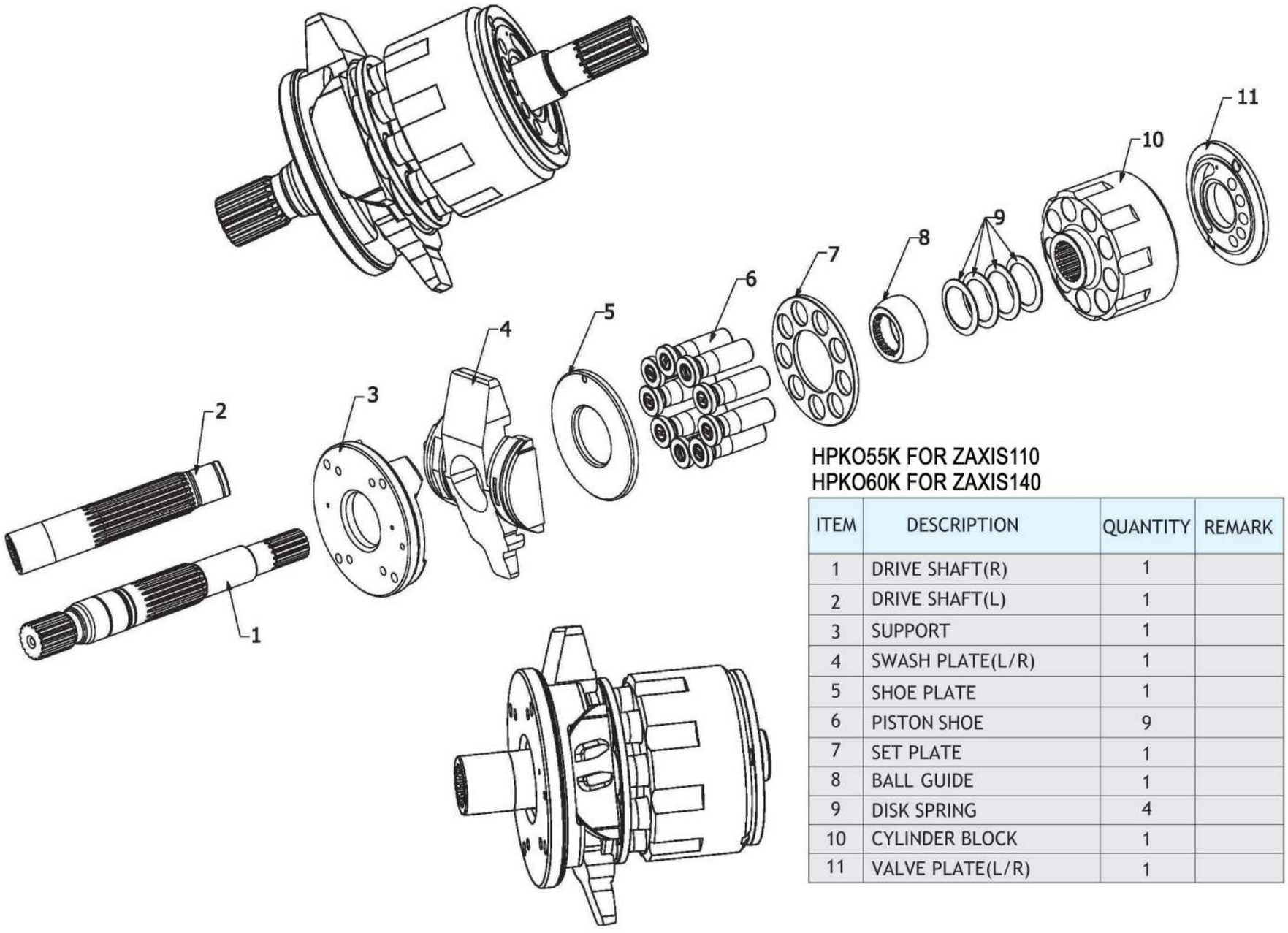

HPKO55K FOR ZAXIS110
HPKO60K FOR ZAXIS140

ITEM	DESCRIPTION	QUANTITY	REMARK
1	DRIVE SHAFT(R)	1	
2	DRIVE SHAFT(L)	1	
3	SUPPORT	1	
4	SWASH PLATE(L/R)	1	
5	SHOE PLATE	1	
6	PISTON SHOE	9	
7	SET PLATE	1	
8	BALL GUIDE	1	
9	DISK SPRING	4	
10	CYLINDER BLOCK	1	
11	VALVE PLATE(L/R)	1	

HAN DOK HYDRAULIC

H3V/H5V SERIES



H3V SERIES

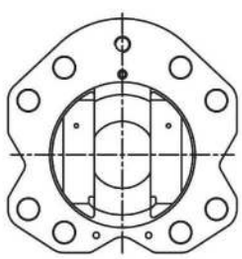

H5V SERIES

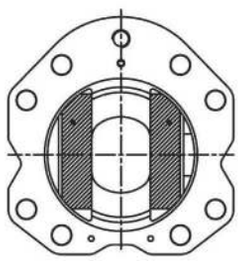

BRASS BRAZING ON THE SLIDE SURFACE
OF H5V SERIES

CATERPILLAR

H3V
SERIES



H5V
SERIES



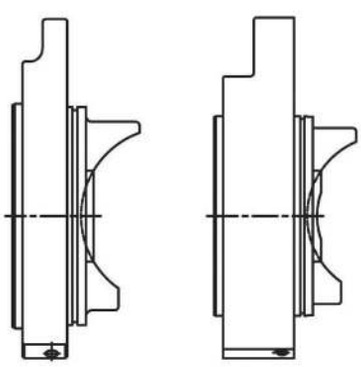

IT IS DIFFERENT SHAPE BETWEEN H3V SERIES AND H5V SERIES

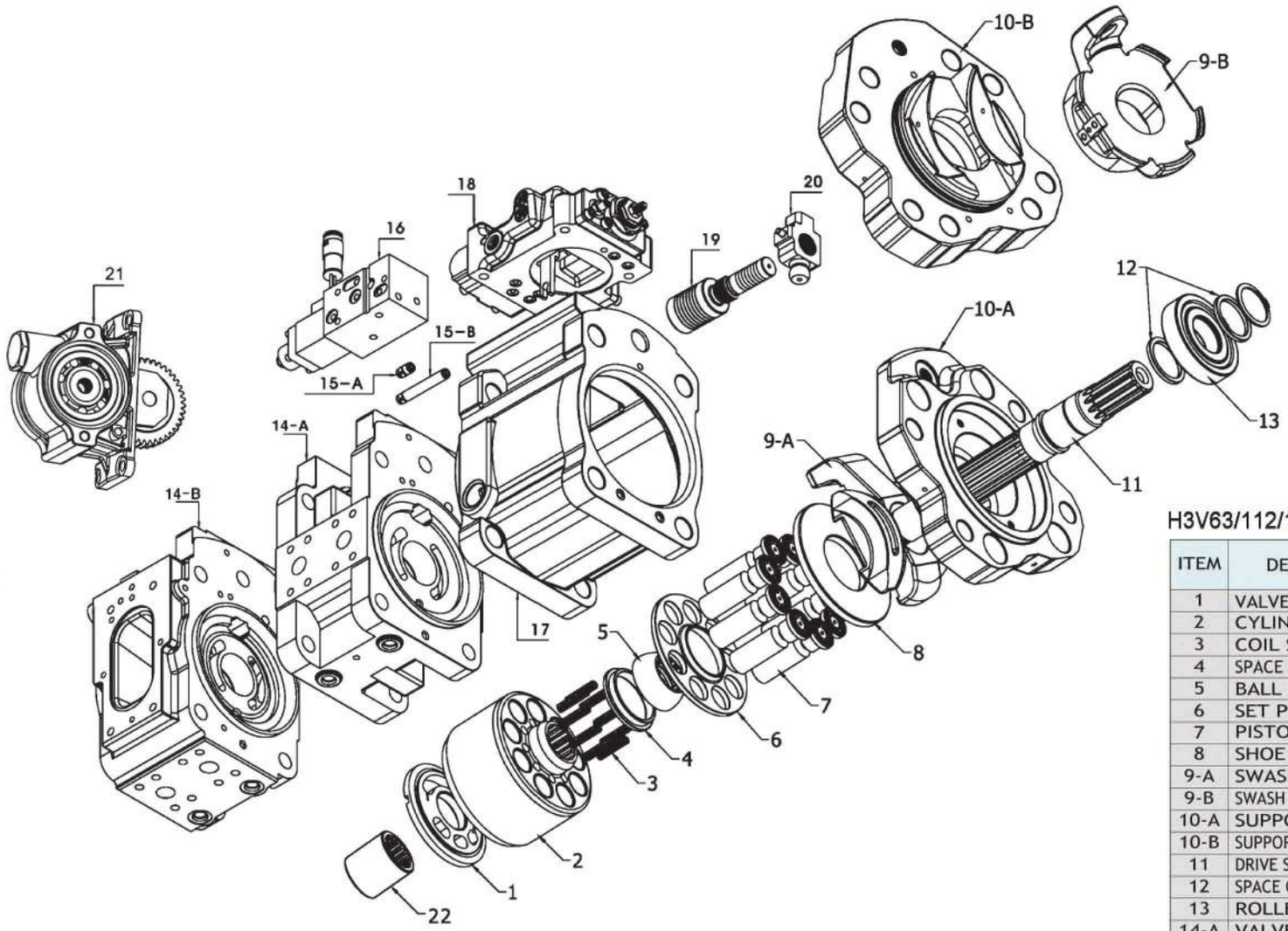

H3V63/112/140/180/280, H5V80/140/160/180/200

ITEM	DESCRIPTION	QUANTITY	REMARK
1	VALVE PLATE(L/R)	1	
2	CYLINDER BLOCK	1	
3	COIL SPRING	9	
4	SPACE OF BALL GUIDE	1	
5	BALL GUIDE	1	
6	SET PLATE	1	
7	PISTON SHOE	9	
8	SHOE PLATE	1	
9-A	SWASH PLATE	1	
9-B	SWASH PLATE(CATERPILLER)	1	
10-A	SUPPORT	1	
10-B	SUPPORT(CATERPILLER)	1	
11	DRIVE SHAFT(FR/RR)	1	
12	SPACE OF DRIVE SHAFT	2	
13	ROLLER BEARING	1	
14-A	VALVE BLOCK	1	
14-B	VALVE BLOCK(H3V DTP/H5V SERIES)	1	
15-A	CHECK VALVE-SHORT	1	
15-B	CHECK VALVE-LONG	1	
16	EPR VALVE	1	
17	CASE	1	
18	REGULATOR ASSY	1	
19	SERVO PISTON	1	
20	TILTING PIN	1	
21	PTO BOX ASSY	1	
22	COUPLING	1	

HAN DOK HYDRAULIC

H3SP30&36C



IT IS DIFFERENT PISTON

H3SP30	H3SP36C
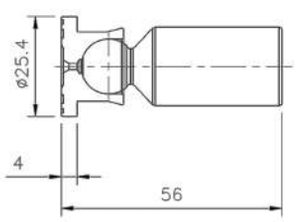	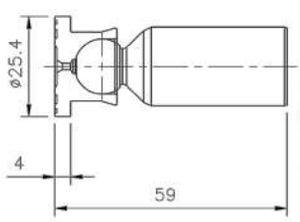

IT IS DIFFERENT CYLINDER BLOCK

H3SP30	H3SP36C
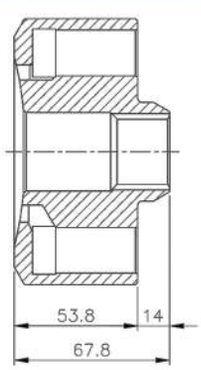	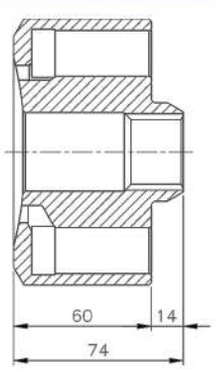

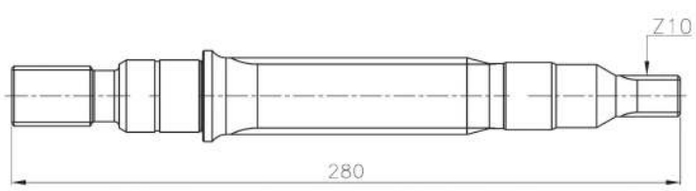

DOUBLE PILOT TYPE

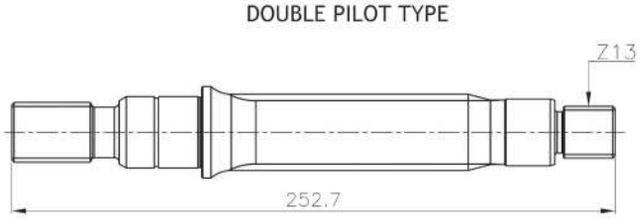

SINGLE PILOT TYPE

IT IS DIFFERENT SHAPE BETWEEN DOUBLE AND SINGLE PILOT TYPE OF DRIVE SHAFT

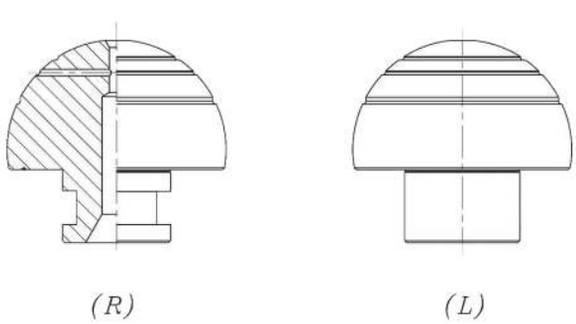

IT IS DIFFERENT SHAPE BETWEEN R TYPE AND L TYPE OF BALL

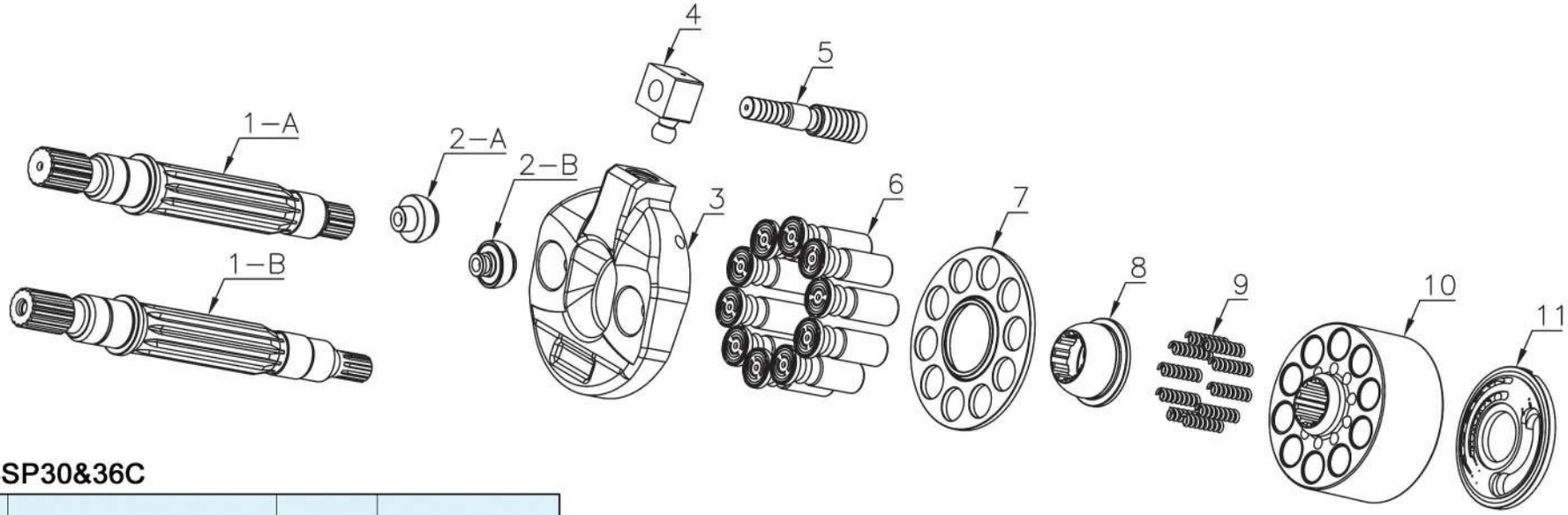

H3SP30&36C

ITEM	DESCRIPTION	QUANTITY	REMARK
1-A	DRIVE SHAFT	1	SINGLE PILOT TYPE
1-B	DRIVE SHAFT	1	DOUBLE PILOT TYPE
2-A	SWASH PLATE PIVOT BALL (L)	1	
2-B	SWASH PLATE PIVOT BALL (R)	1	
3	SWASH PLATE	1	
4	TILTING PIN	1	
5	SERVO PISTON	1	
6	PISTON SHOE	10	
7	SET PLATE	1	
8	BALL GUIDE	1	
9	COIL SPRING	10	
10	CYLINDER BLOCK	1	
11	VALVE PLATE	1	

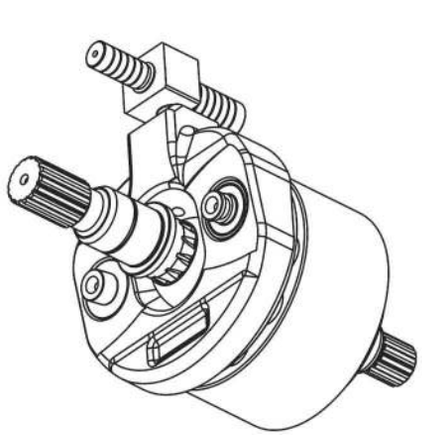

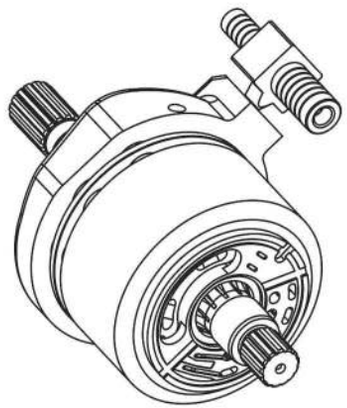

HAN DOK HYDRAULIC

H7SP36



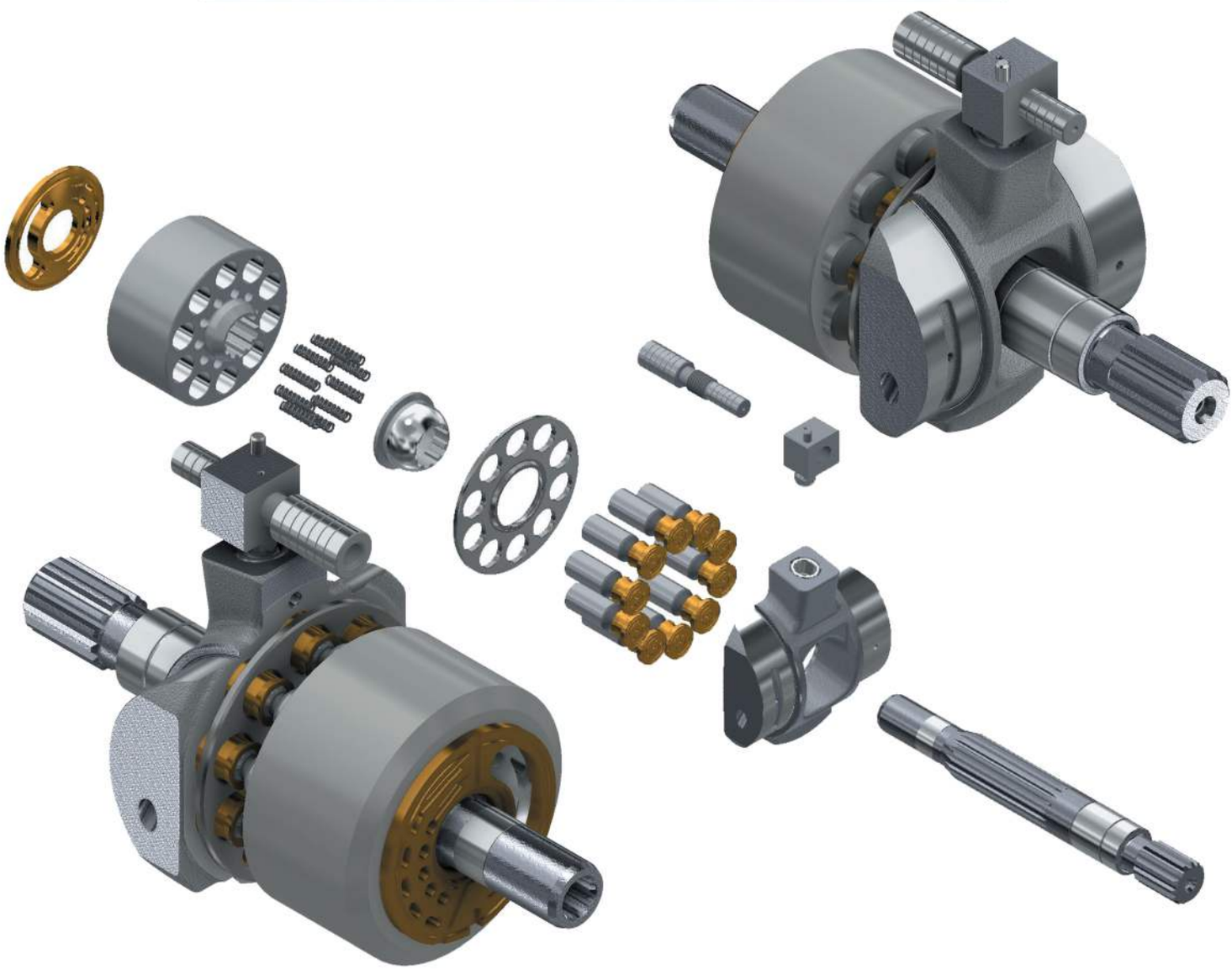

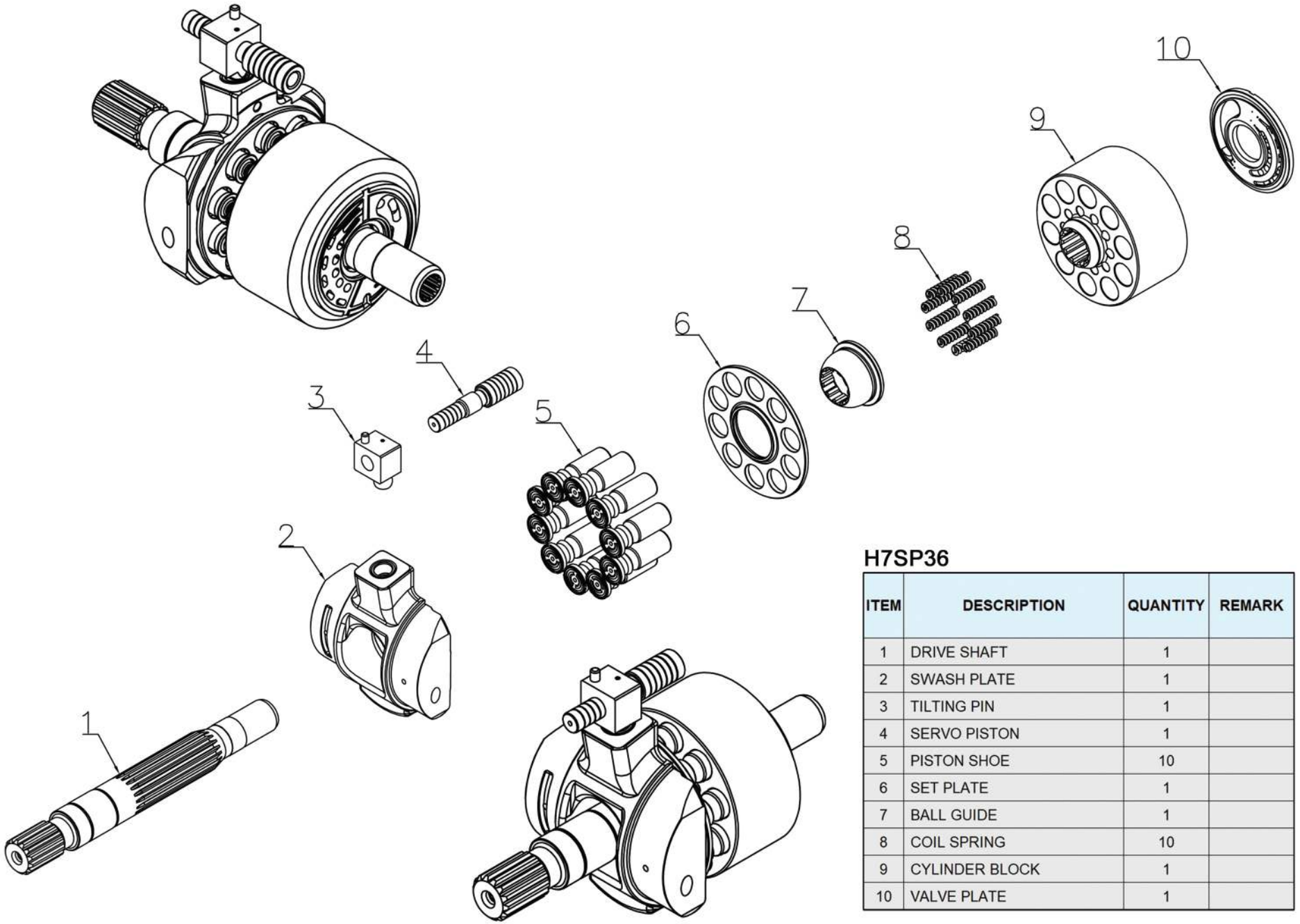

H7SP36

ITEM	DESCRIPTION	QUANTITY	REMARK
1	DRIVE SHAFT	1	
2	SWASH PLATE	1	
3	TILTING PIN	1	
4	SERVO PISTON	1	
5	PISTON SHOE	10	
6	SET PLATE	1	
7	BALL GUIDE	1	
8	COIL SPRING	10	
9	CYLINDER BLOCK	1	
10	VALVE PLATE	1	

HAN DOK HYDRAULIC

H3V112DP&H5V160DP&H5V200DP(DPH)/212DPH



H3V SERIES H5V SERIES

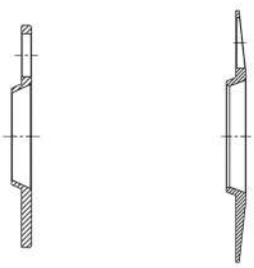

IT IS DIFFERENT SHAPE BETWEEN H3V SERIES AND H5V SERIES

H5V200DPH / H5V212DPH
DRIVE SHAFT - L

H5V200DPH (4500LC)	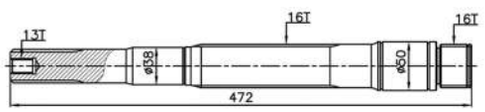
H5V200DPH (ZAXIS-HITACHI)	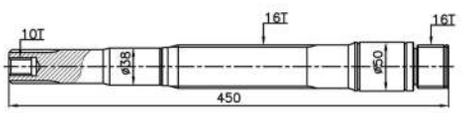
H5V212DPH (KPM)	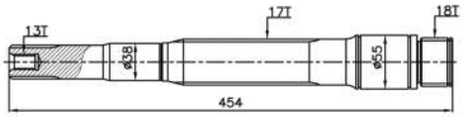
H5V212DPH (CAT)	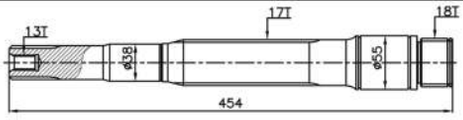

H5V200DPH / H5V212DPH
DRIVE SHAFT - R

H5V200DPH (4500LC)	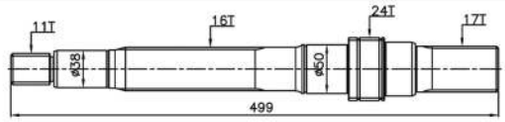
H5V200DPH (ZAXIS-HITACHI)	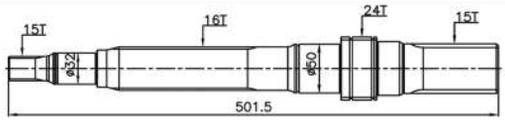
H5V212DPH (KPM)	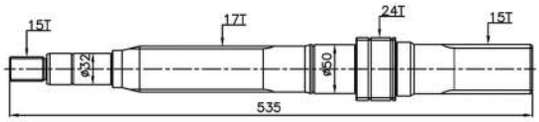
H5V212DPH (CAT)	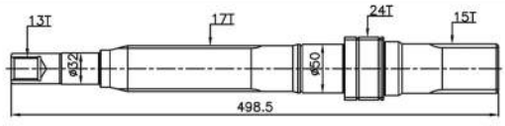

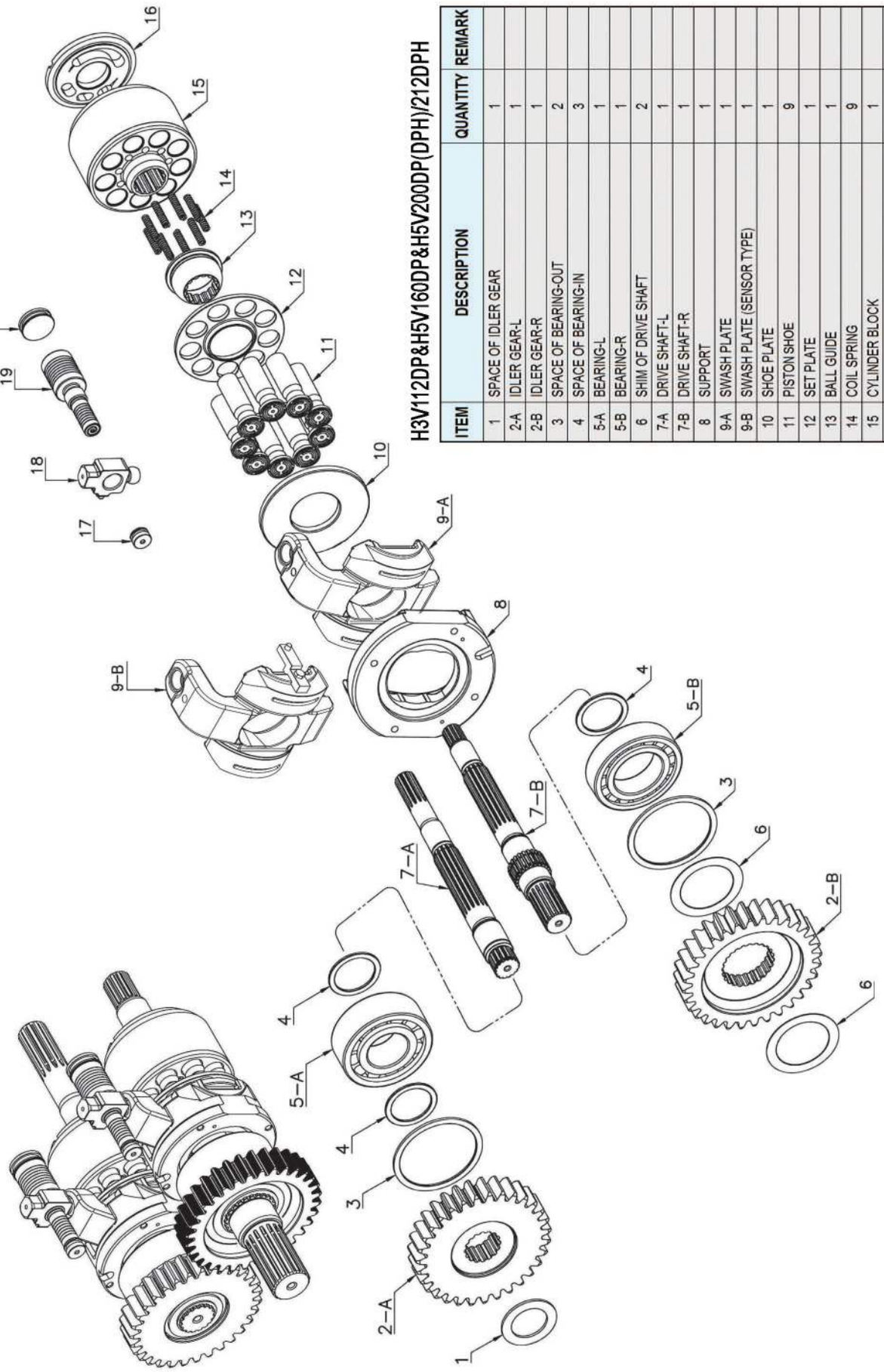

H3V112DP&H5V160DP&H5V200DP(DPH)/212DPH

ITEM	DESCRIPTION	QUANTITY	REMARK
1	SPACE OF IDLER GEAR	1	
2-A	IDLER GEAR-L	1	
2-B	IDLER GEAR-R	1	
3	SPACE OF BEARING-OUT	2	
4	SPACE OF BEARING-IN	3	
5-A	BEARING-L	1	
5-B	BEARING-R	1	
6	SHIM OF DRIVE SHAFT	2	
7-A	DRIVE SHAFT-L	1	
7-B	DRIVE SHAFT-R	1	
8	SUPPORT	1	
9-A	SWASH PLATE	1	
9-B	SWASH PLATE (SENSOR TYPE)	1	
10	SHOE PLATE	1	
11	PISTON SHOE	9	
12	SET PLATE	1	
13	BALL GUIDE	1	
14	COIL SPRING	9	
15	CYLINDER BLOCK	1	
16	VALVE PLATE (L/R)	1	
17	STOPPER-SMALL	1	
18	TILTING PIN	1	
19	SERVO PISTON	1	
20	STOPPER-BIG	1	

HAN DOK HYDRAULIC

H3V63BDT/112BDT FOR KOBELCO



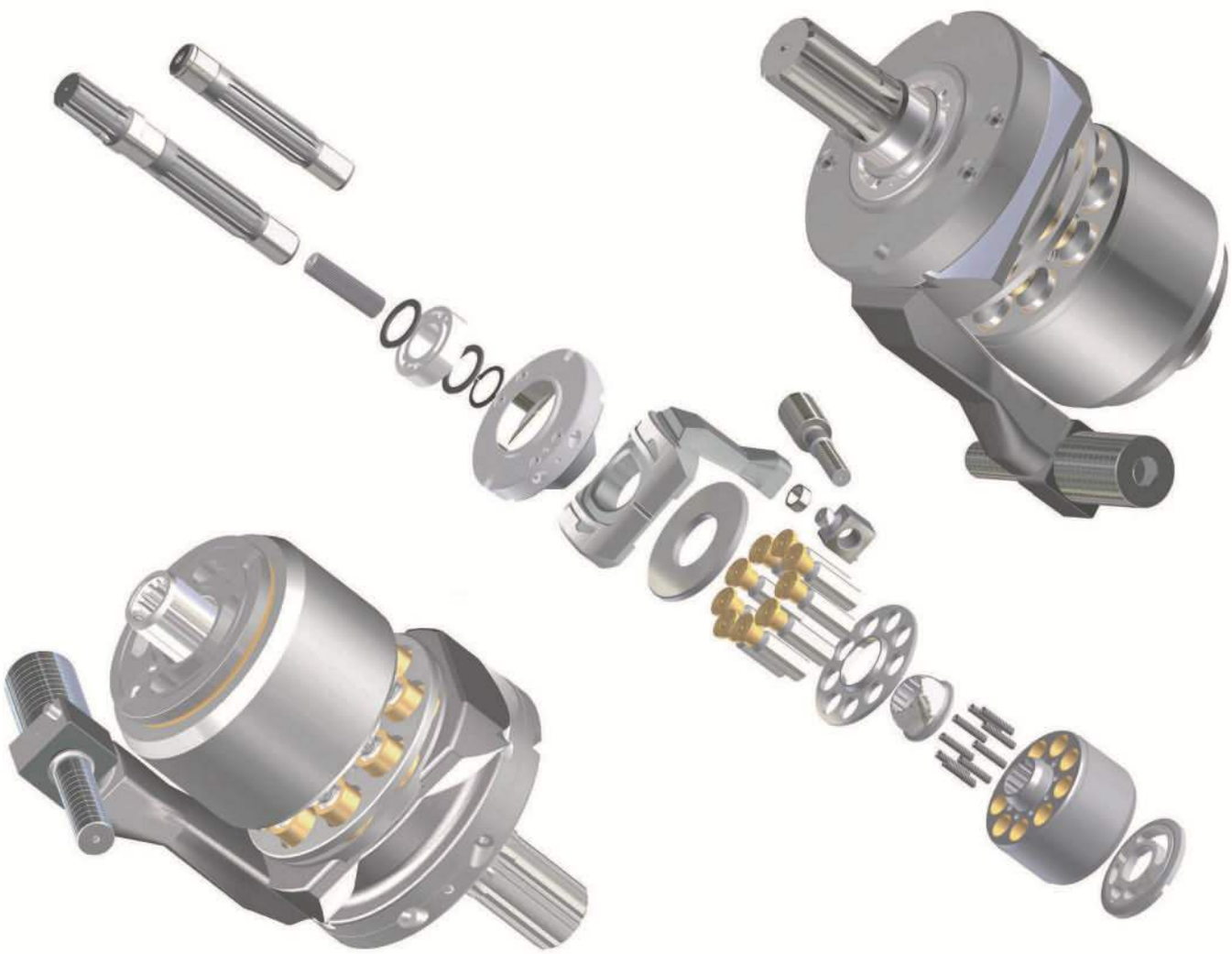

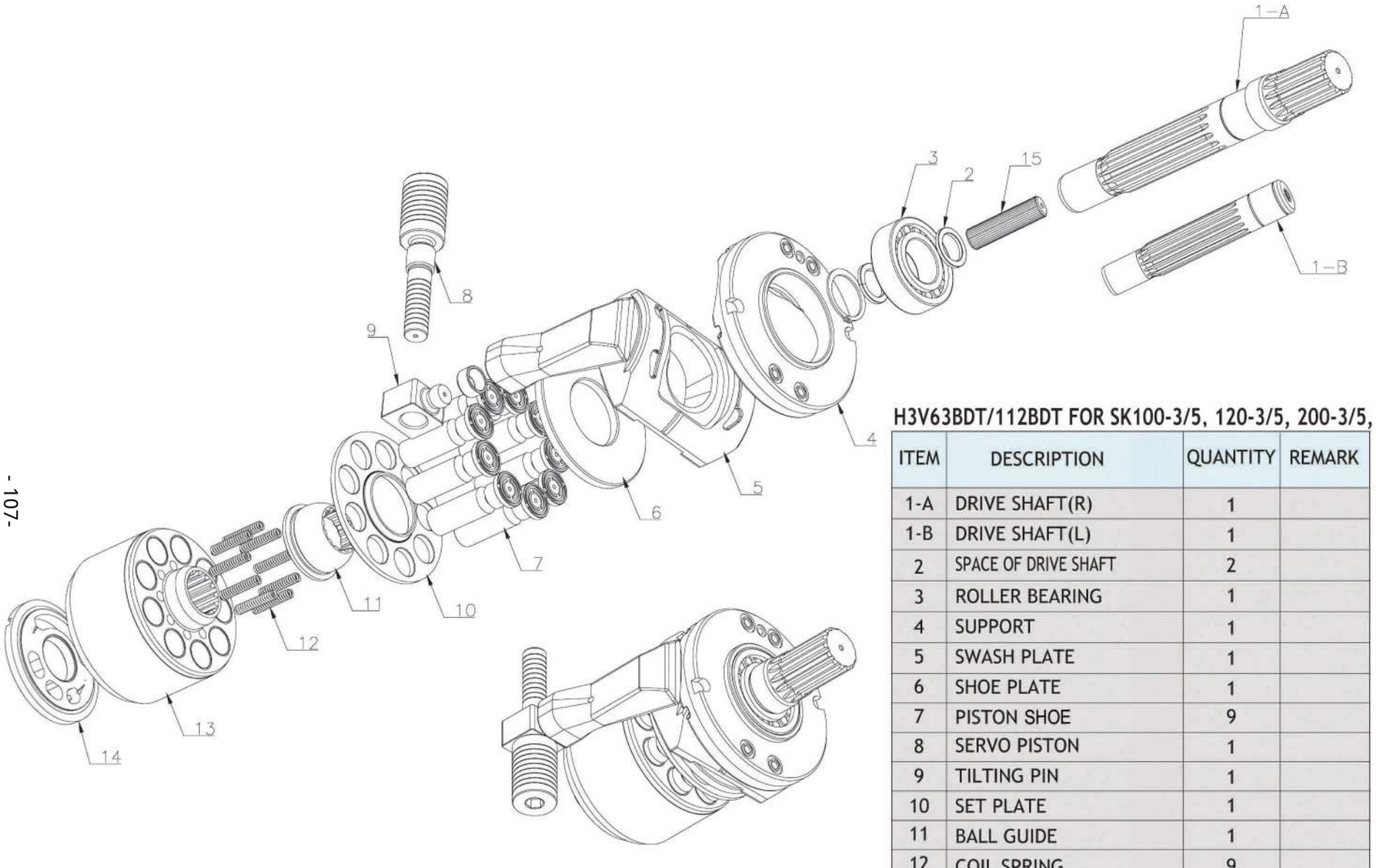

H3V63BDT/112BDT FOR SK100-3/5, 120-3/5, 200-3/5, 220-3/5

ITEM	DESCRIPTION	QUANTITY	REMARK
1-A	DRIVE SHAFT(R)	1	
1-B	DRIVE SHAFT(L)	1	
2	SPACE OF DRIVE SHAFT	2	
3	ROLLER BEARING	1	
4	SUPPORT	1	
5	SWASH PLATE	1	
6	SHOE PLATE	1	
7	PISTON SHOE	9	
8	SERVO PISTON	1	
9	TILTING PIN	1	
10	SET PLATE	1	
11	BALL GUIDE	1	
12	COIL SPRING	9	
13	CYLINDER BLOCK	1	
14	VALVE PLATE	1	
15	COUPLING	1	

HAN DOK HYDRAULIC

H3VL SERIES



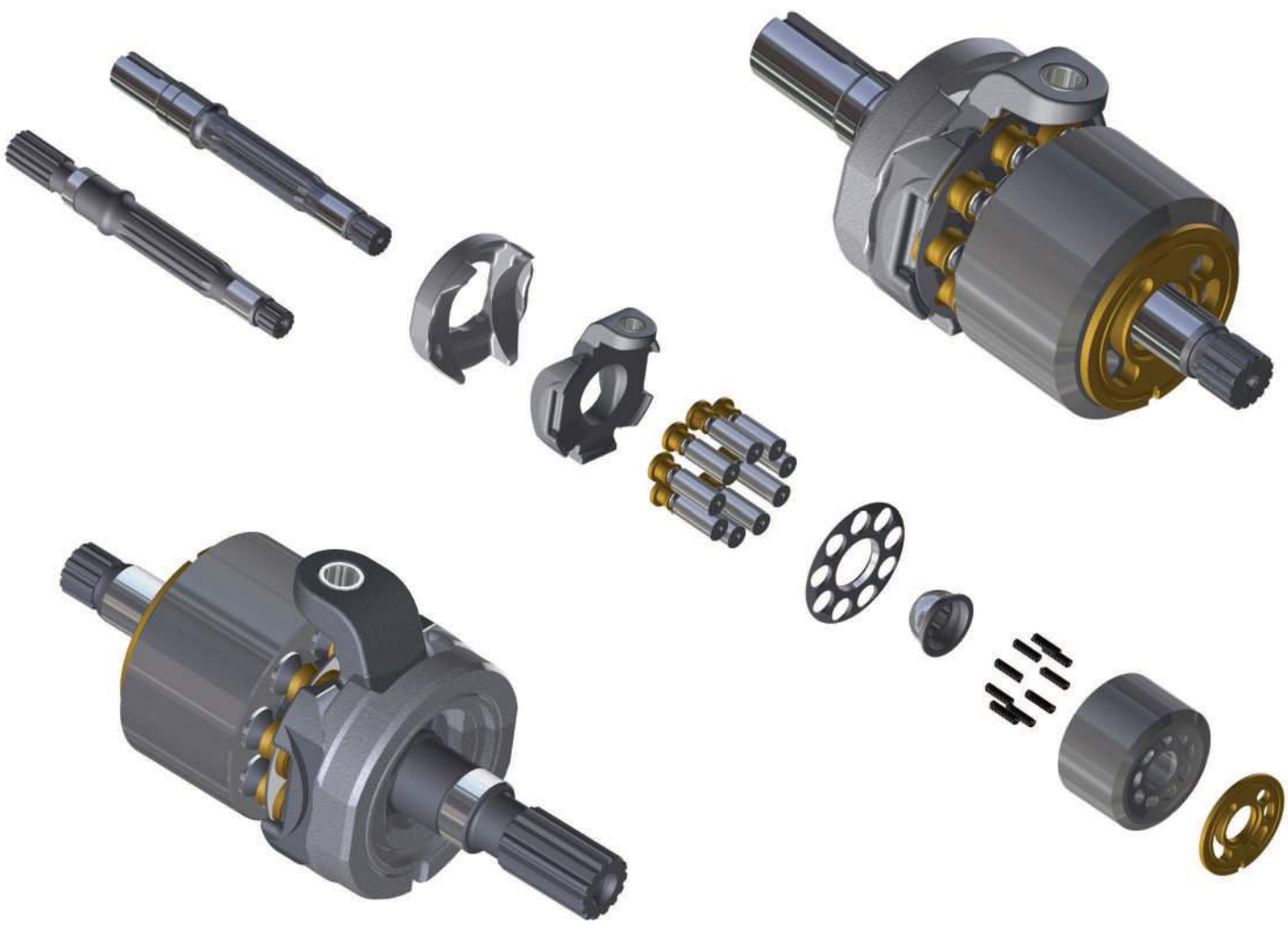

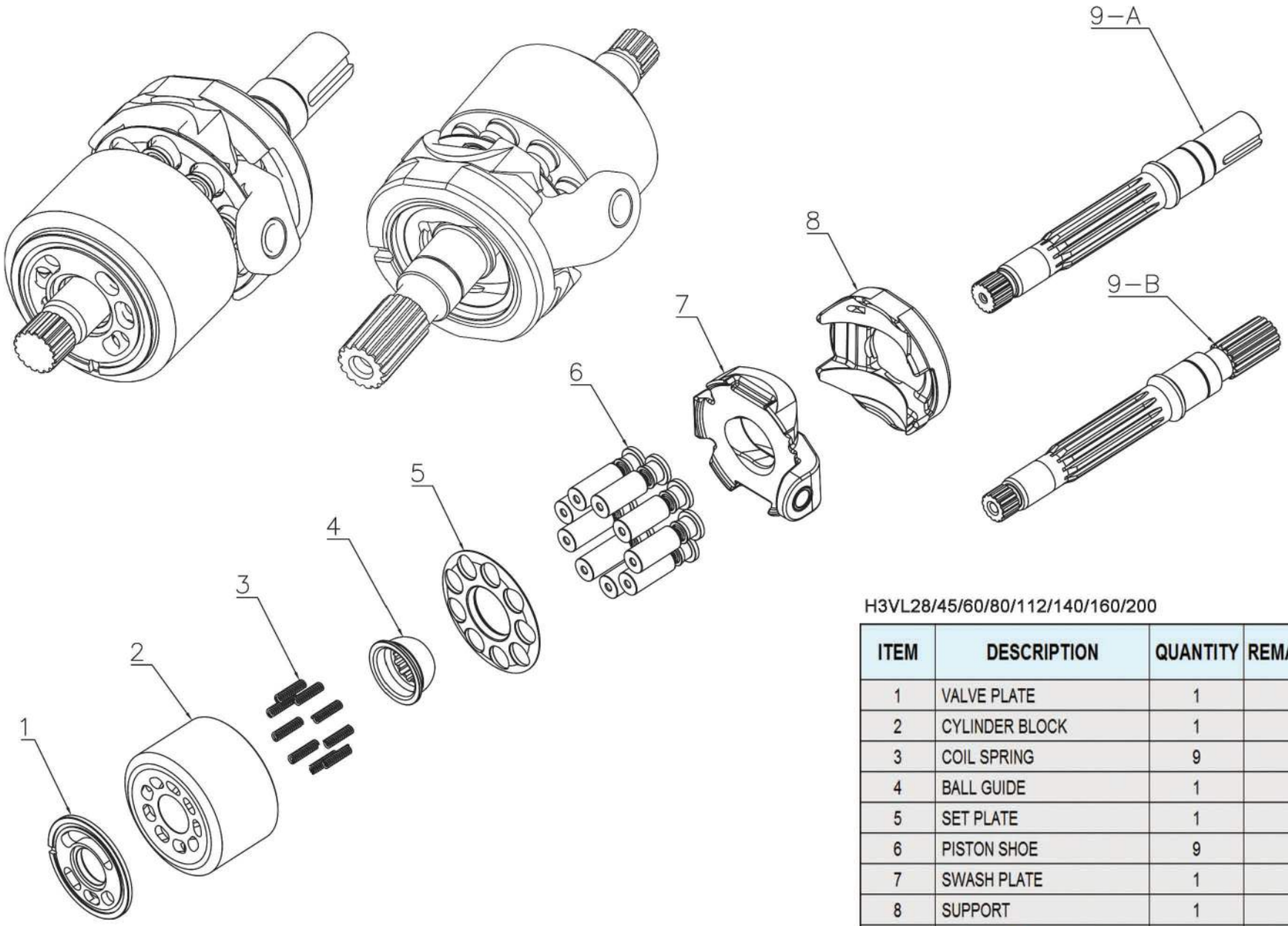

H3VL28/45/60/80/112/140/160/200

ITEM	DESCRIPTION	QUANTITY	REMARK
1	VALVE PLATE	1	
2	CYLINDER BLOCK	1	
3	COIL SPRING	9	
4	BALL GUIDE	1	
5	SET PLATE	1	
6	PISTON SHOE	9	
7	SWASH PLATE	1	
8	SUPPORT	1	
9-A	DRIVE SHAFT (KEY TYPE)	1	ISO/SAE
9-B	DRIVE SHAFT (SPLINE TYPE)	1	

HAN DOK HYDRAULIC



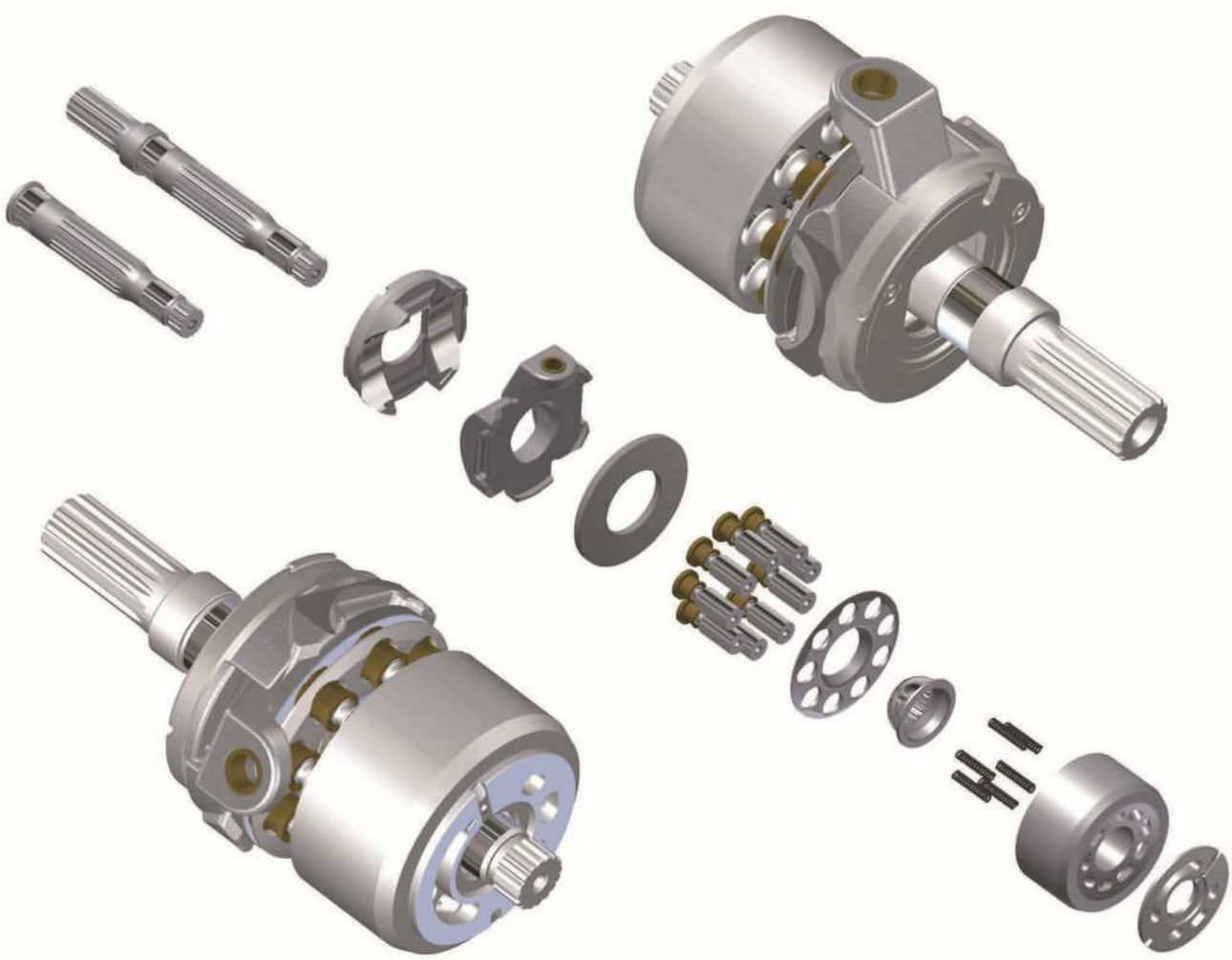

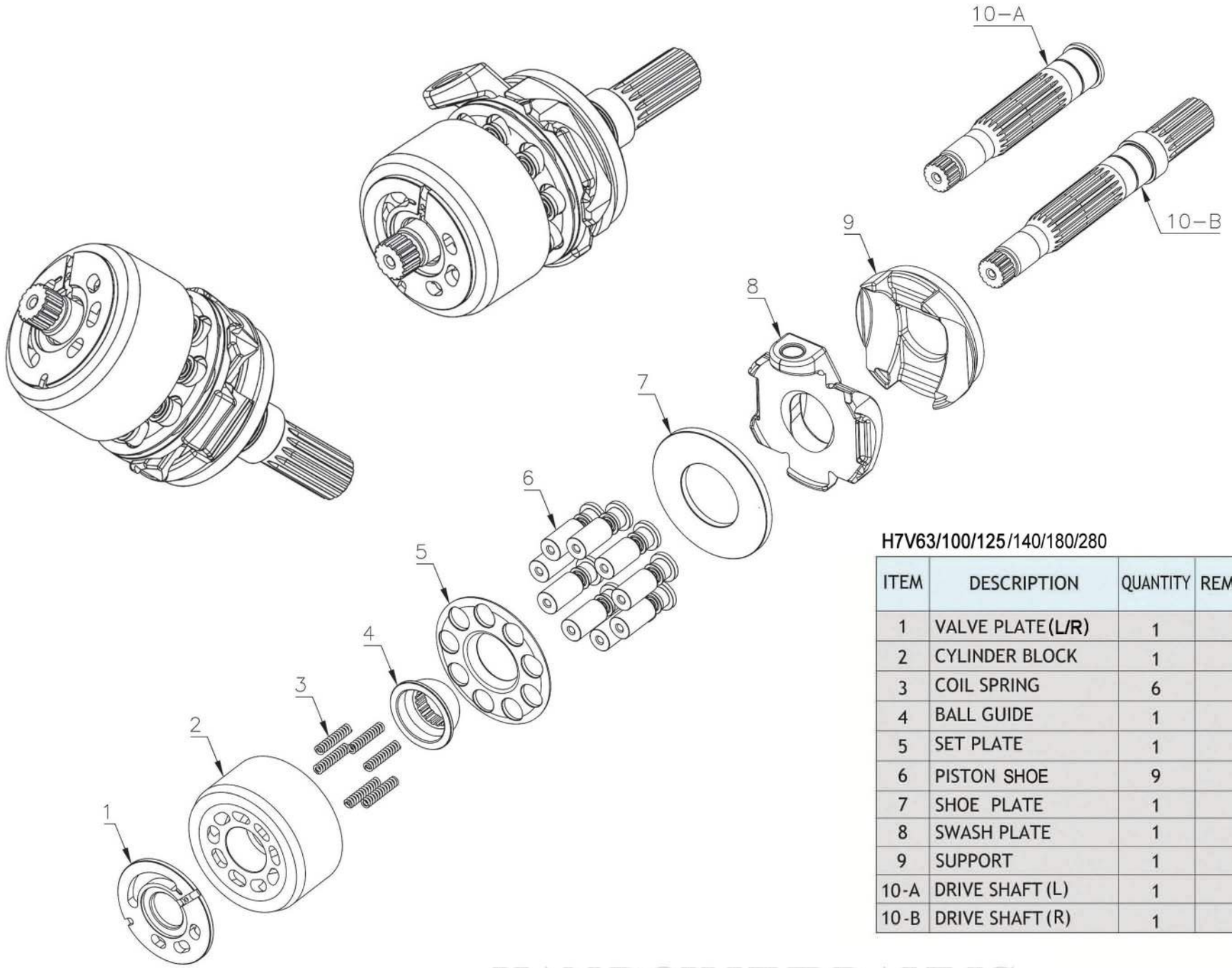

H7V63/100/125/140/180/280

ITEM	DESCRIPTION	QUANTITY	REMARK
1	VALVE PLATE **(L/R)**	1	
2	CYLINDER BLOCK	1	
3	COIL SPRING	6	
4	BALL GUIDE	1	
5	SET PLATE	1	
6	PISTON SHOE	9	
7	SHOE PLATE	1	
8	SWASH PLATE	1	
9	SUPPORT	1	
10-A	DRIVE SHAFT (L)	1	
10-B	DRIVE SHAFT (R)	1	

HAN DOK HYDRAULIC

HMSO67/72(FOR ZAXIS110)



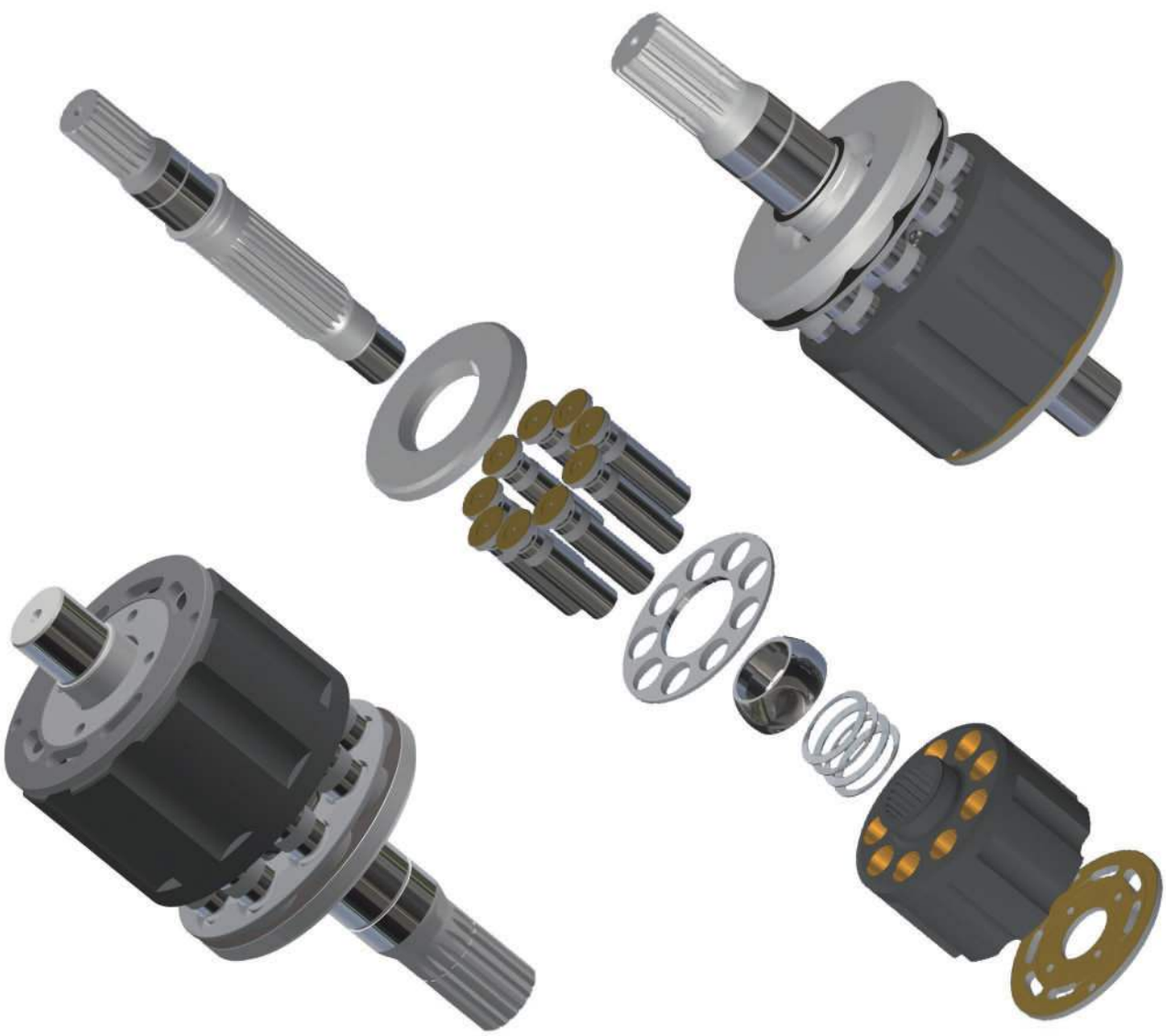

HMSO67/72(FOR ZAXIS110)

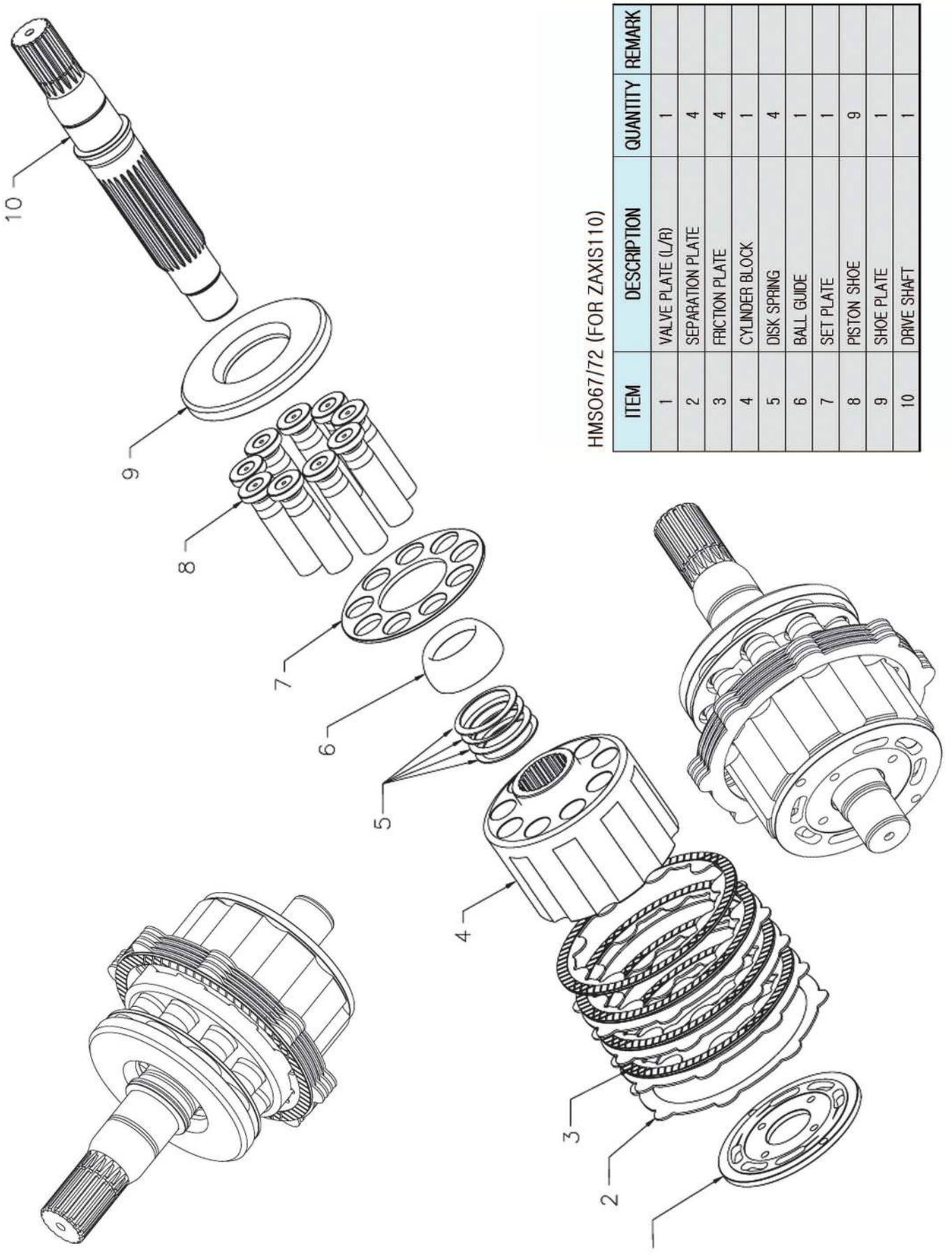

HMSO67/72 (FOR ZAXIS110)

ITEM	DESCRIPTION	QUANTITY	REMARK
1	VALVE PLATE (L/R)	1	
2	SEPARATION PLATE	4	
3	FRICTION PLATE	4	
4	CYLINDER BLOCK	1	
5	DISK SPRING	4	
6	BALL GUIDE	1	
7	SET PLATE	1	
8	PISTON SHOE	9	
9	SHOE PLATE	1	
10	DRIVE SHAFT	1	

HANDOK HYDRAULIC

JMF SERIES



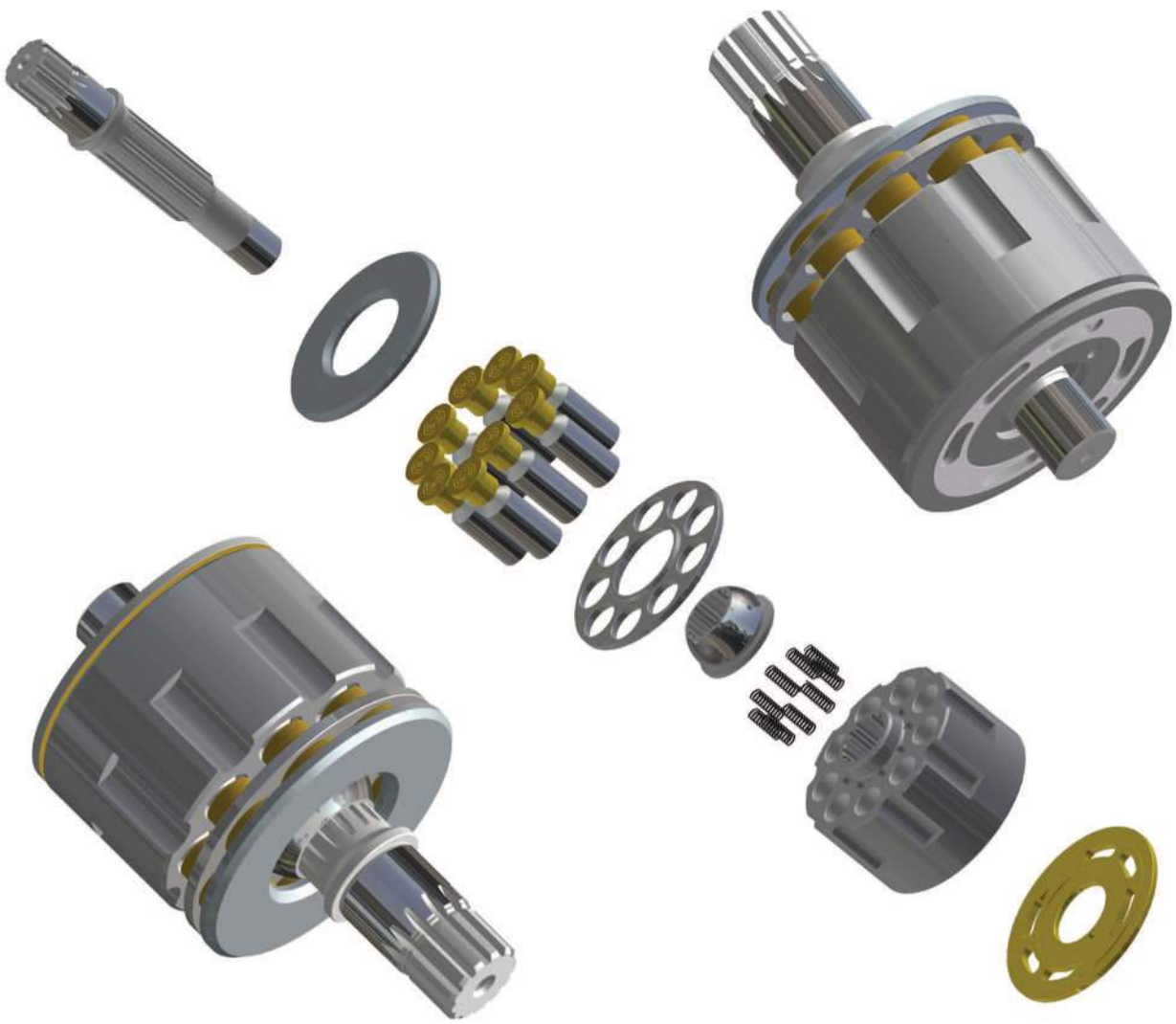

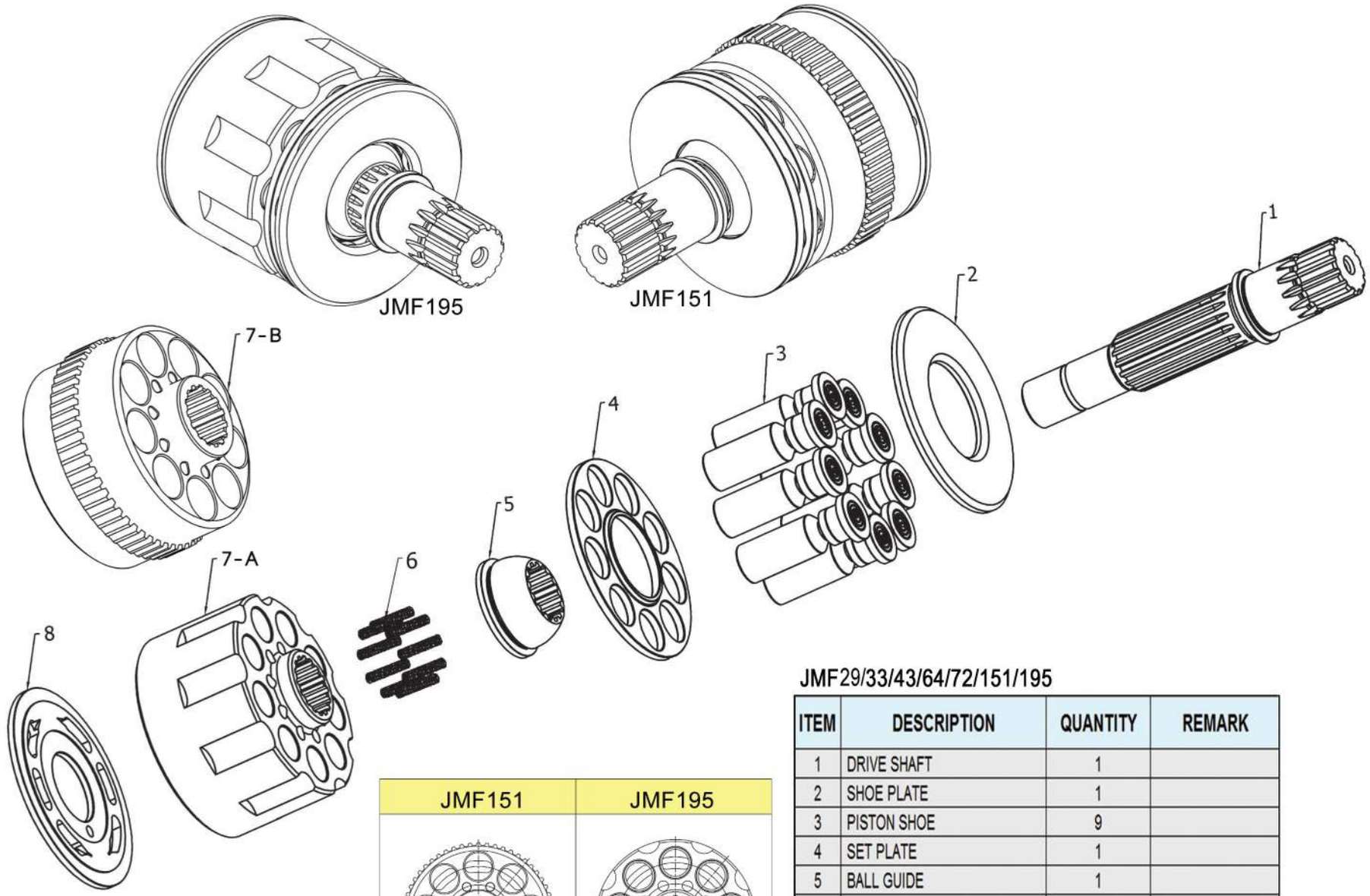

JMF29/33/43/64/72/151/195

ITEM	DESCRIPTION	QUANTITY	REMARK
1	DRIVE SHAFT	1	
2	SHOE PLATE	1	
3	PISTON SHOE	9	
4	SET PLATE	1	
5	BALL GUIDE	1	
6	COIL SPRING	9	
7-A	CYLINDER BLOCK	1	JMF195
7-B		1	JMF151
8	VALVE PLATE	1	

JMF151	JMF195
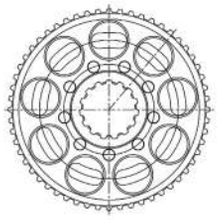	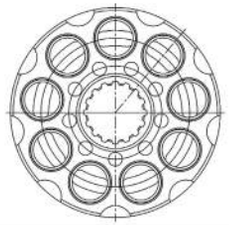

HAN DOK HYDRAULIC



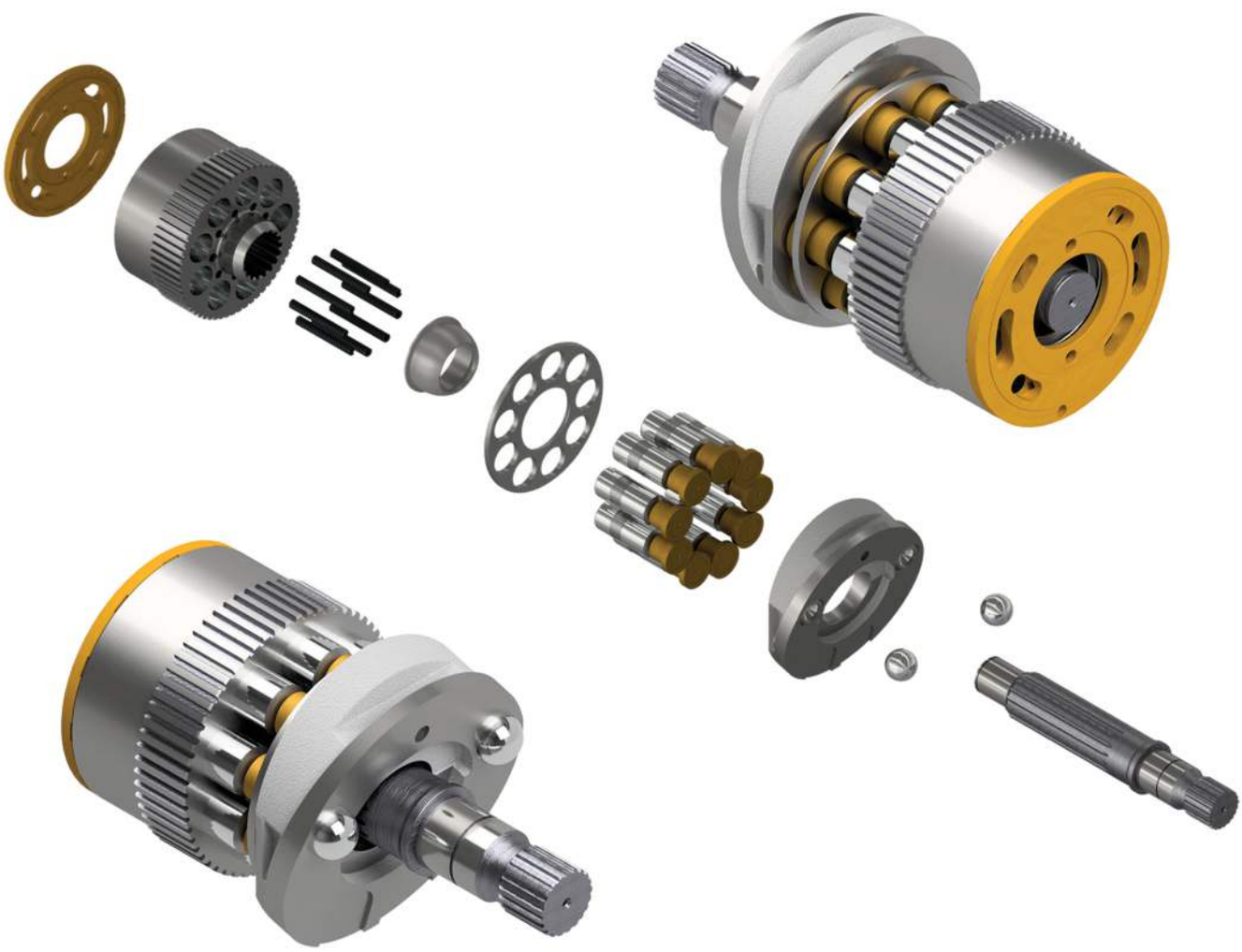

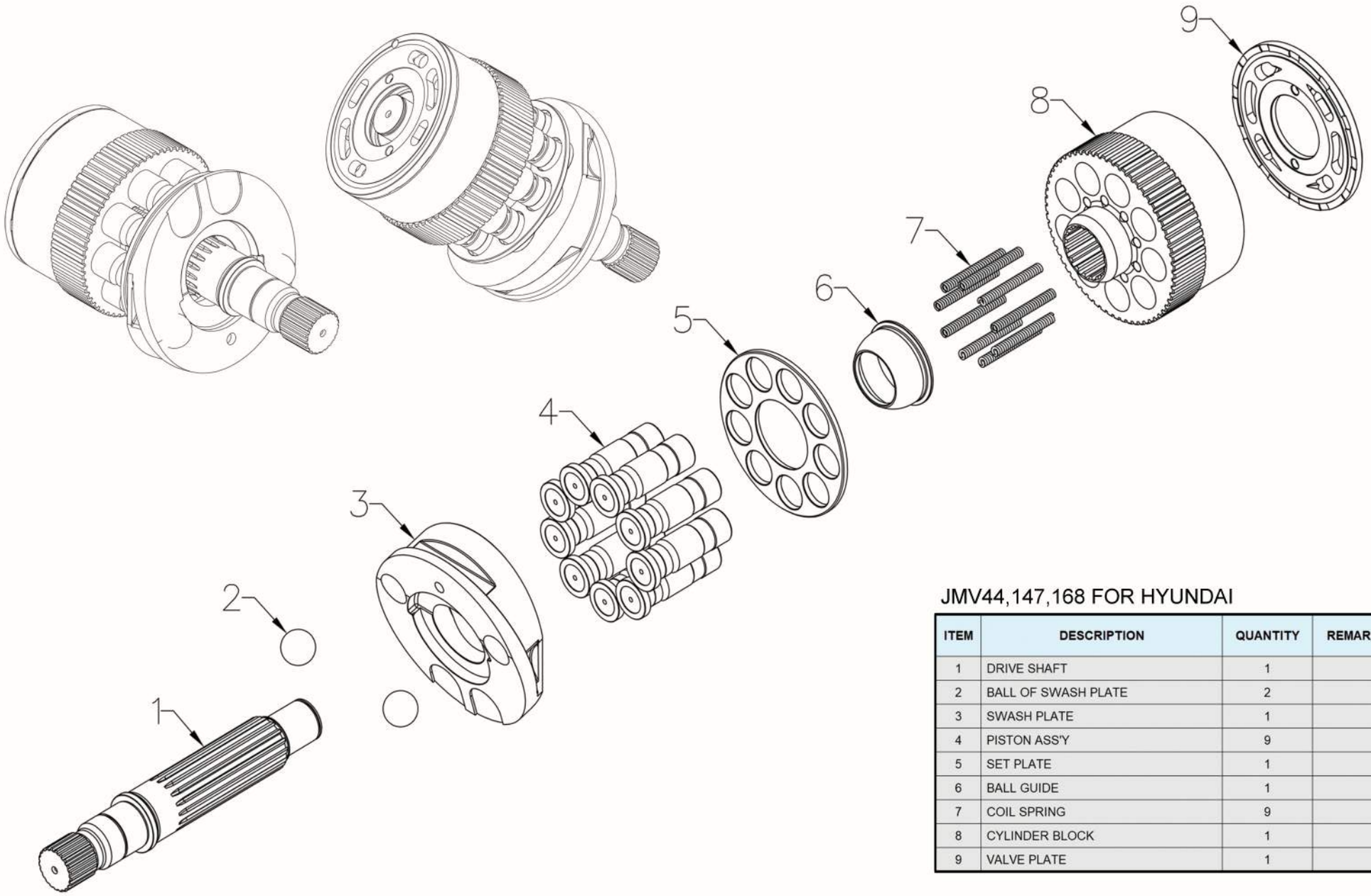

JMV44,147,168 FOR HYUNDAI

ITEM	DESCRIPTION	QUANTITY	REMARK
1	DRIVE SHAFT	1	
2	BALL OF SWASH PLATE	2	
3	SWASH PLATE	1	
4	PISTON ASS'Y	9	
5	SET PLATE	1	
6	BALL GUIDE	1	
7	COIL SPRING	9	
8	CYLINDER BLOCK	1	
9	VALVE PLATE	1	

HAN DOK HYDRAULIC



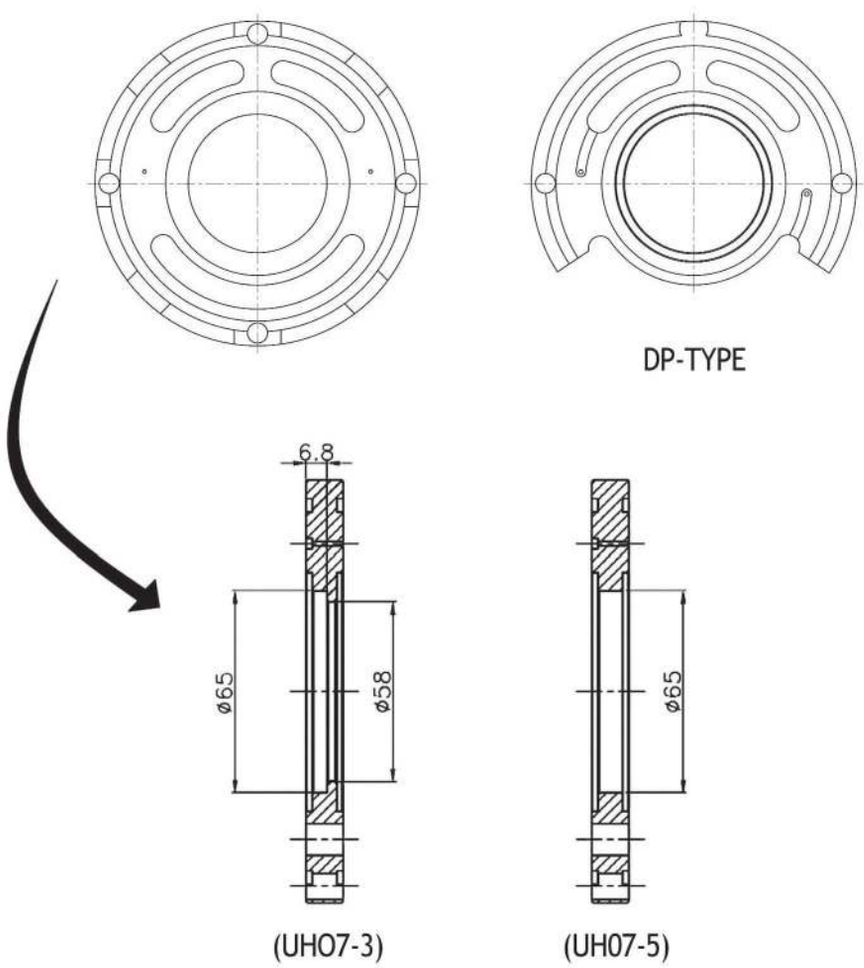

IT IS DIFFERENT SHAPE BETWEEN UH07-3 TYPE AND UH07-5 TYPE OF VALVE PLATE

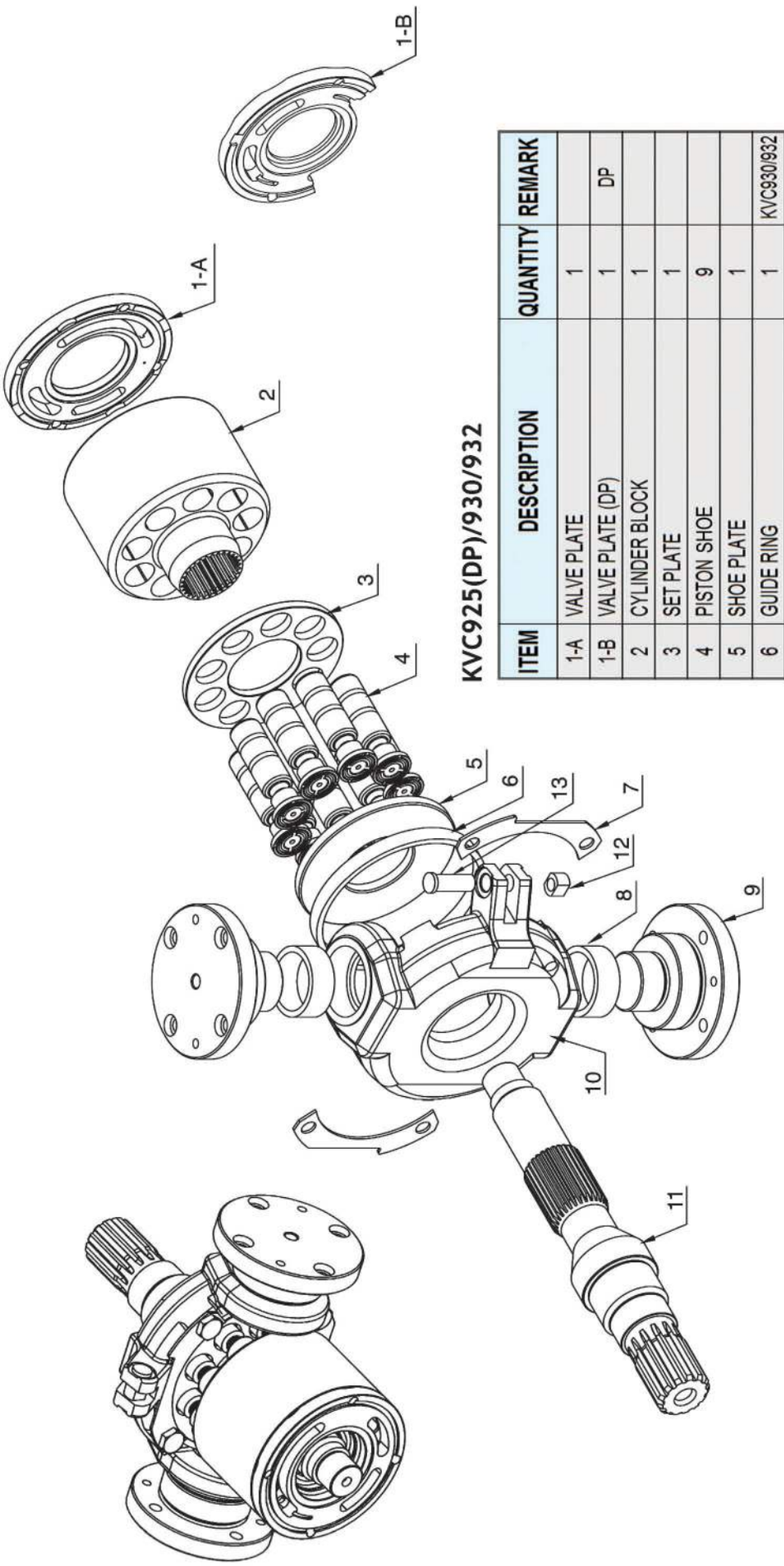

KVC925(DP)/930/932

ITEM	DESCRIPTION	QUANTITY	REMARK
1-A	VALVE PLATE	1	
1-B	VALVE PLATE (DP)	1	DP
2	CYLINDER BLOCK	1	
3	SET PLATE	1	
4	PISTON SHOE	9	
5	SHOE PLATE	1	
6	GUIDE RING	1	KVC930/932
7	FIX PLATE	2	
8	AXLE BUSHING	2	
9	AXLE SHAFT	2	
10	SWASH PLATE	1	
11	DRIVE SHAFT	1	
12	GUIDE PIECE	1	KVC925
13	PIN OF SWASH PLATE	1	KVC925/932

HANDOK HYDRAULIC



RETAINER PLATE

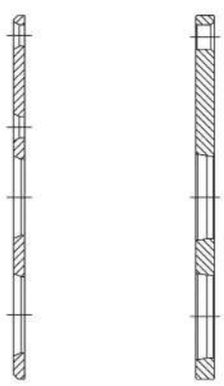

TAPER TYPE FILLET TYPE

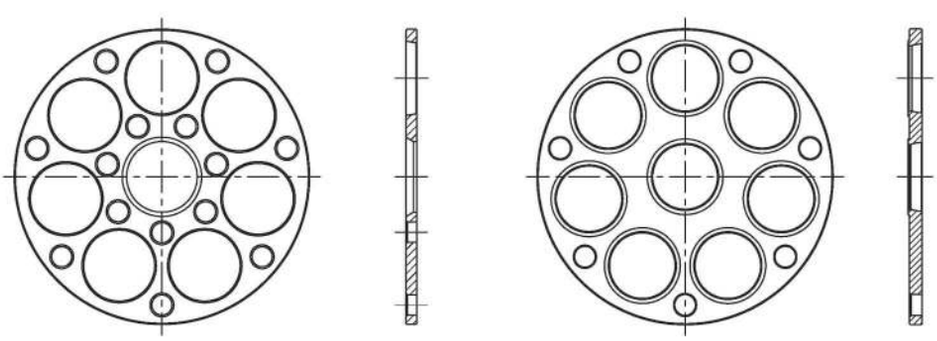

14–BOLT TYPE *7–BOLT TYPE*

IT IS DIFFERENT SHAPE BETWEEN 7-BOLT TYPE AND 14-BOLT TYPE

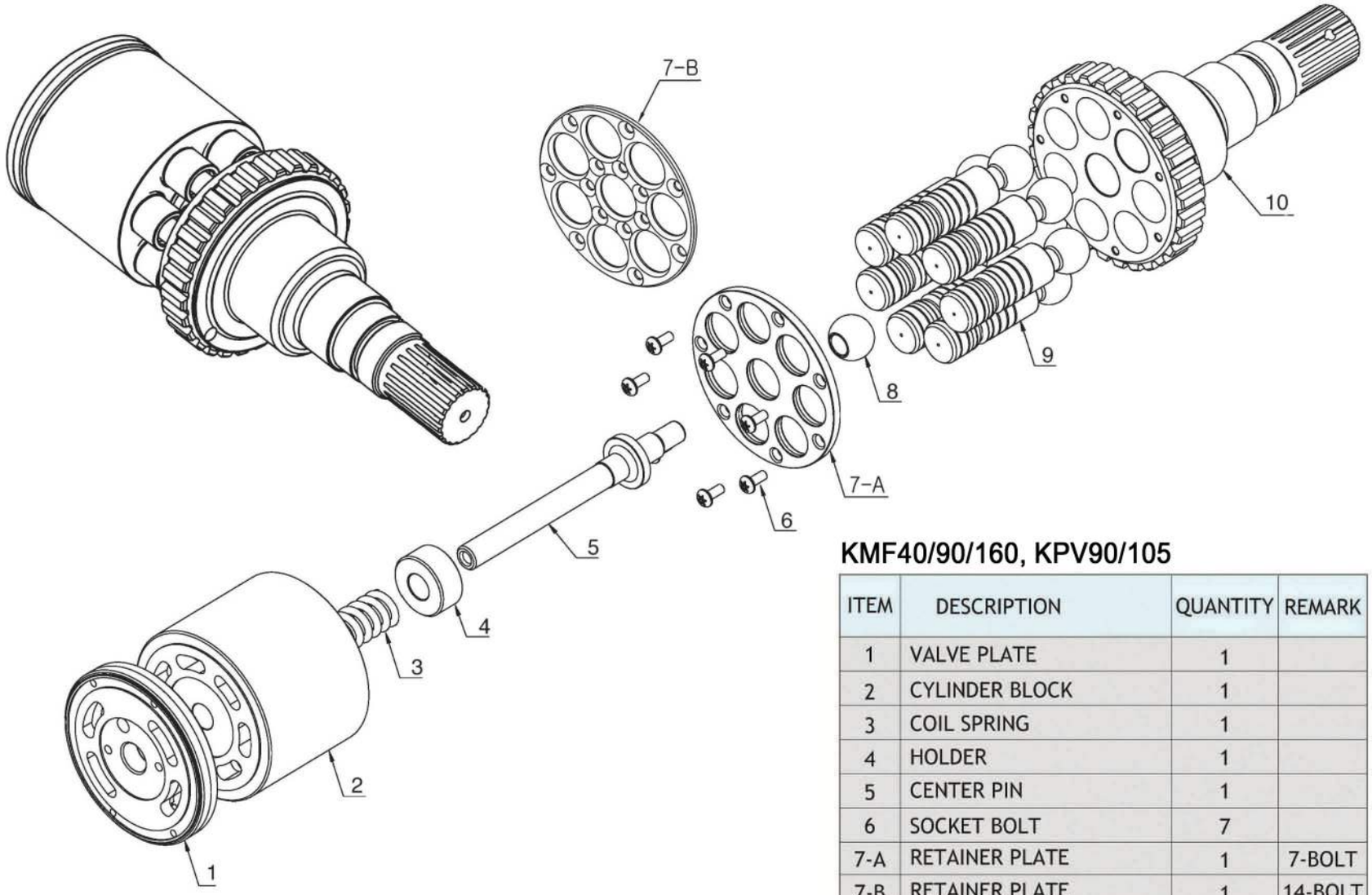

KMF40/90/160, KPV90/105

ITEM	DESCRIPTION	QUANTITY	REMARK
1	VALVE PLATE	1	
2	CYLINDER BLOCK	1	
3	COIL SPRING	1	
4	HOLDER	1	
5	CENTER PIN	1	
6	SOCKET BOLT	7	
7-A	RETAINER PLATE	1	7-BOLT
7-B	RETAINER PLATE	1	14-BOLT
8	CENTER BALL	1	
9	PISTON	7	
10	DRIVE SHAFT	1	

HAN DOK HYDRAULIC



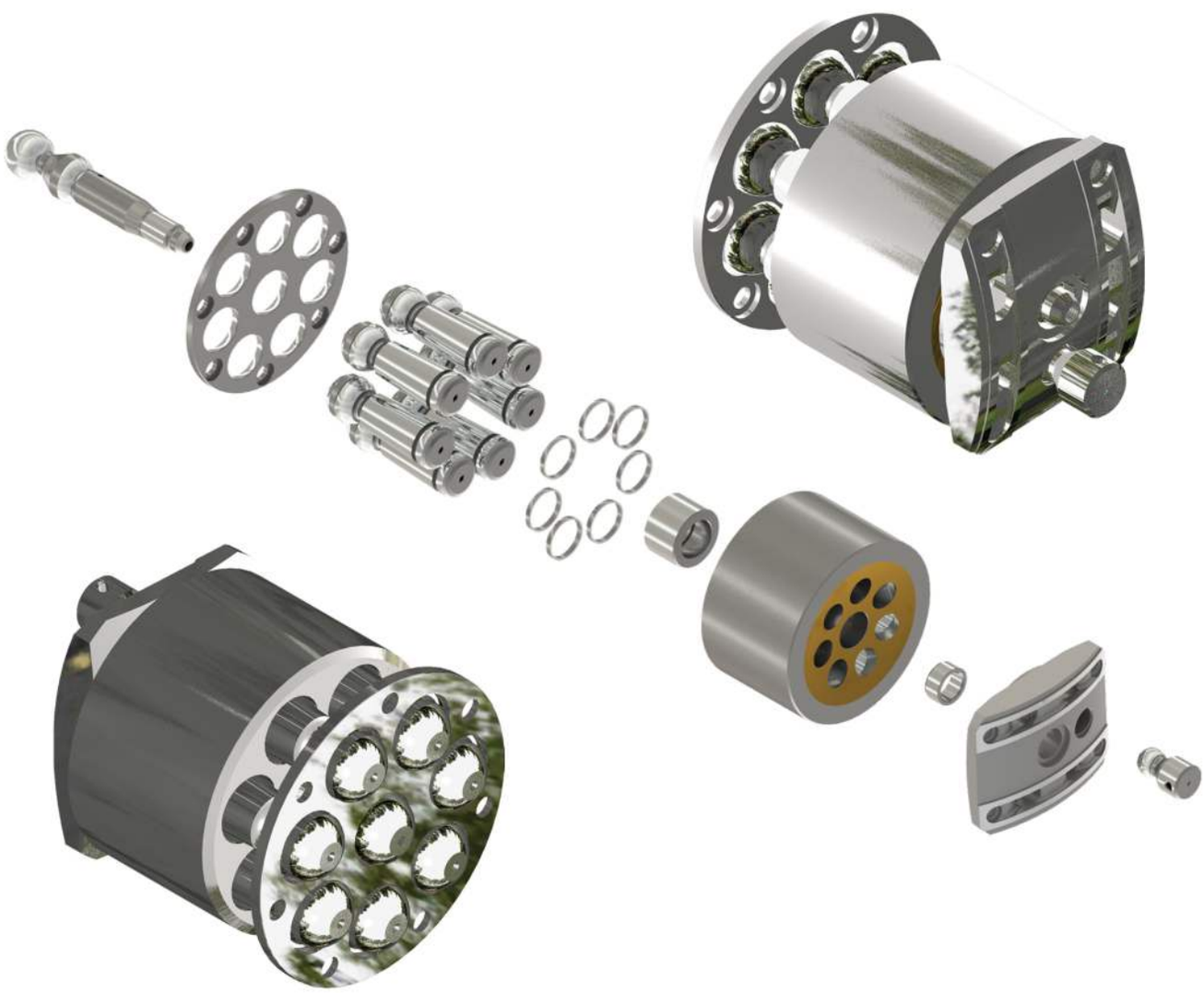

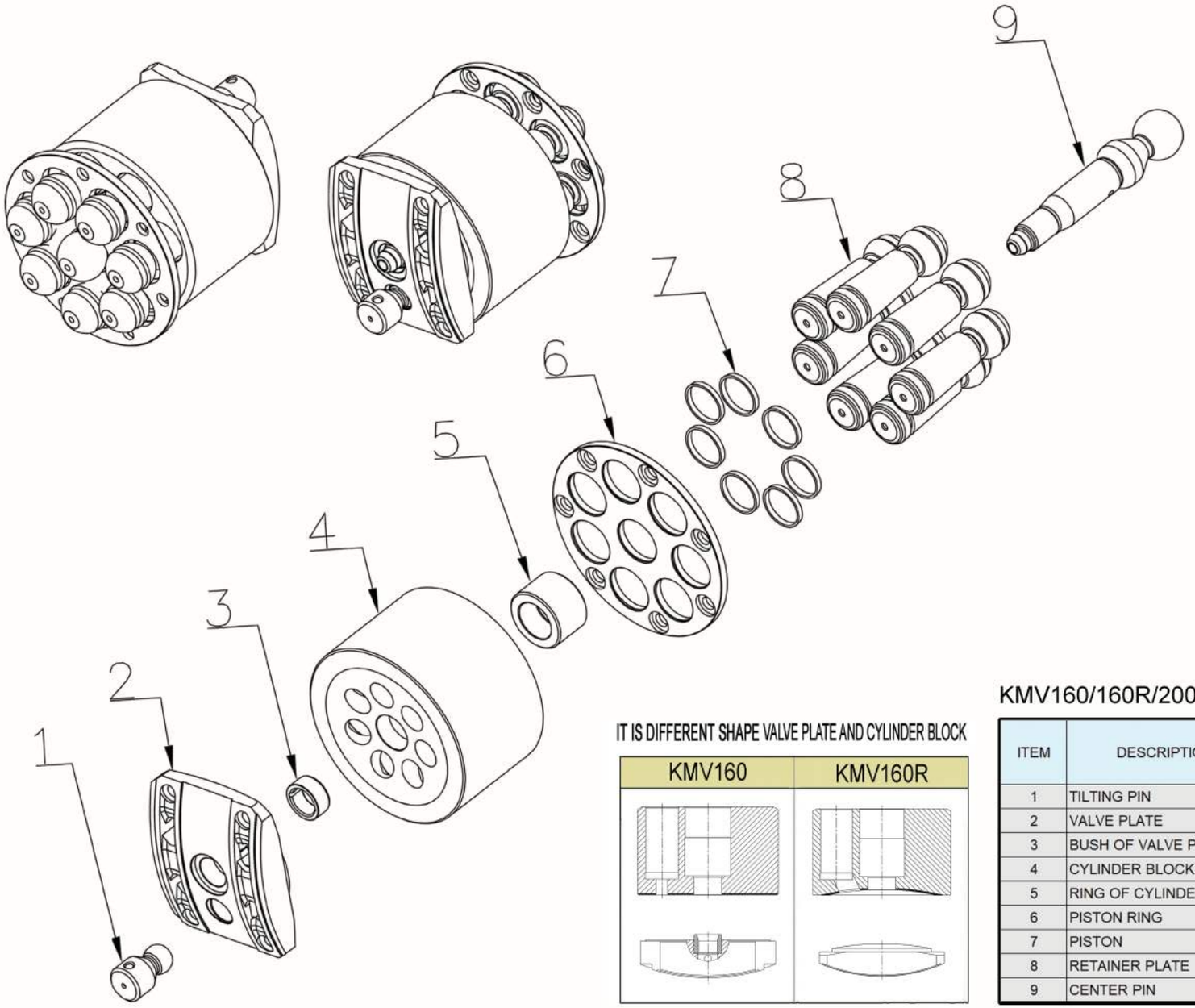

IT IS DIFFERENT SHAPE VALVE PLATE AND CYLINDER BLOCK

KMV160/160R/200

ITEM	DESCRIPTION	QUANTITY	REMARK
1	TILTING PIN	1	
2	VALVE PLATE	1	
3	BUSH OF VALVE PLATE	1	
4	CYLINDER BLOCK	1	
5	RING OF CYLINDER BLOCK	1	
6	PISTON RING	7	
7	PISTON	7	
8	RETAINER PLATE	1	
9	CENTER PIN	1	

HAN DOK HYDRAULIC



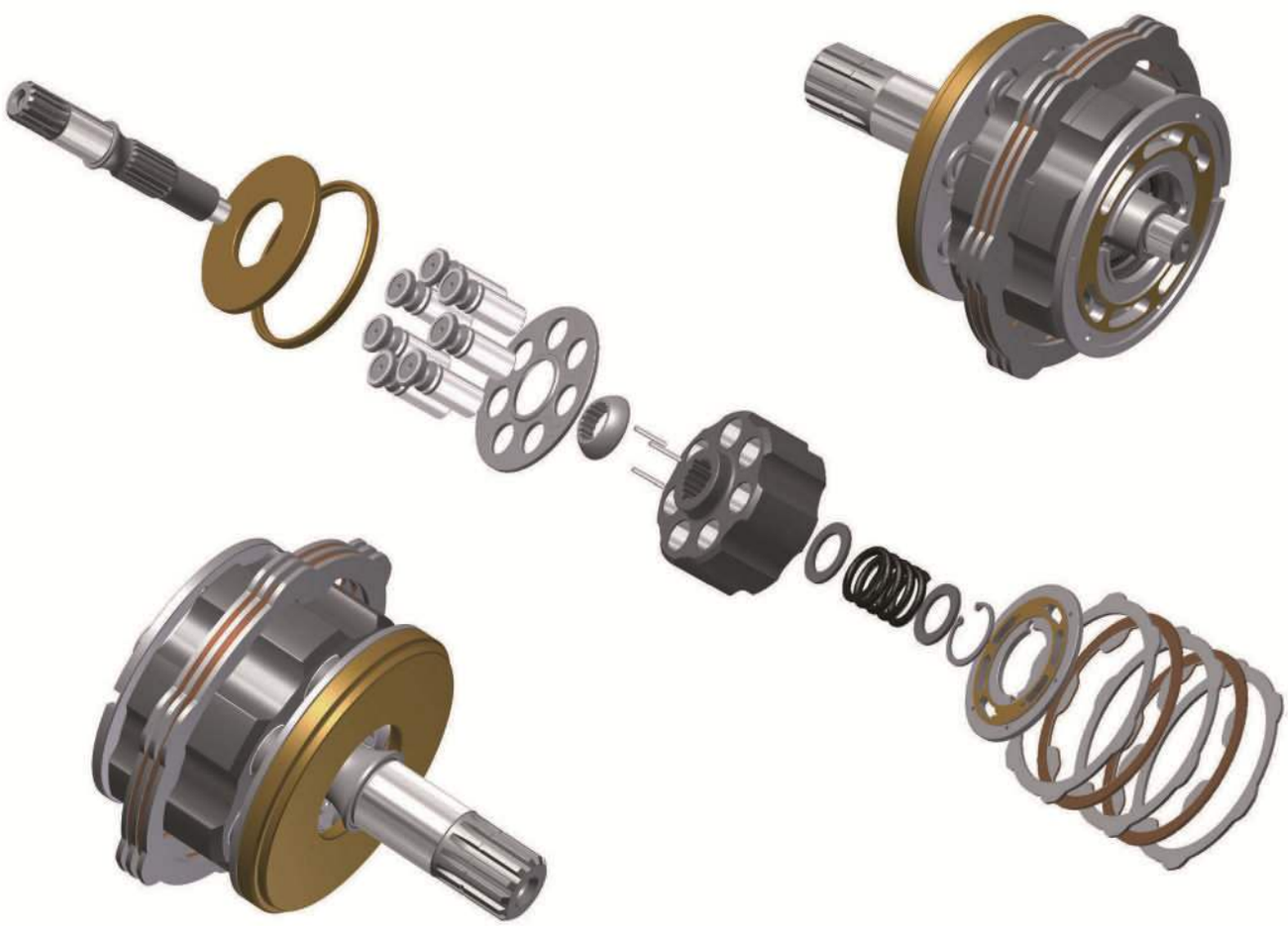

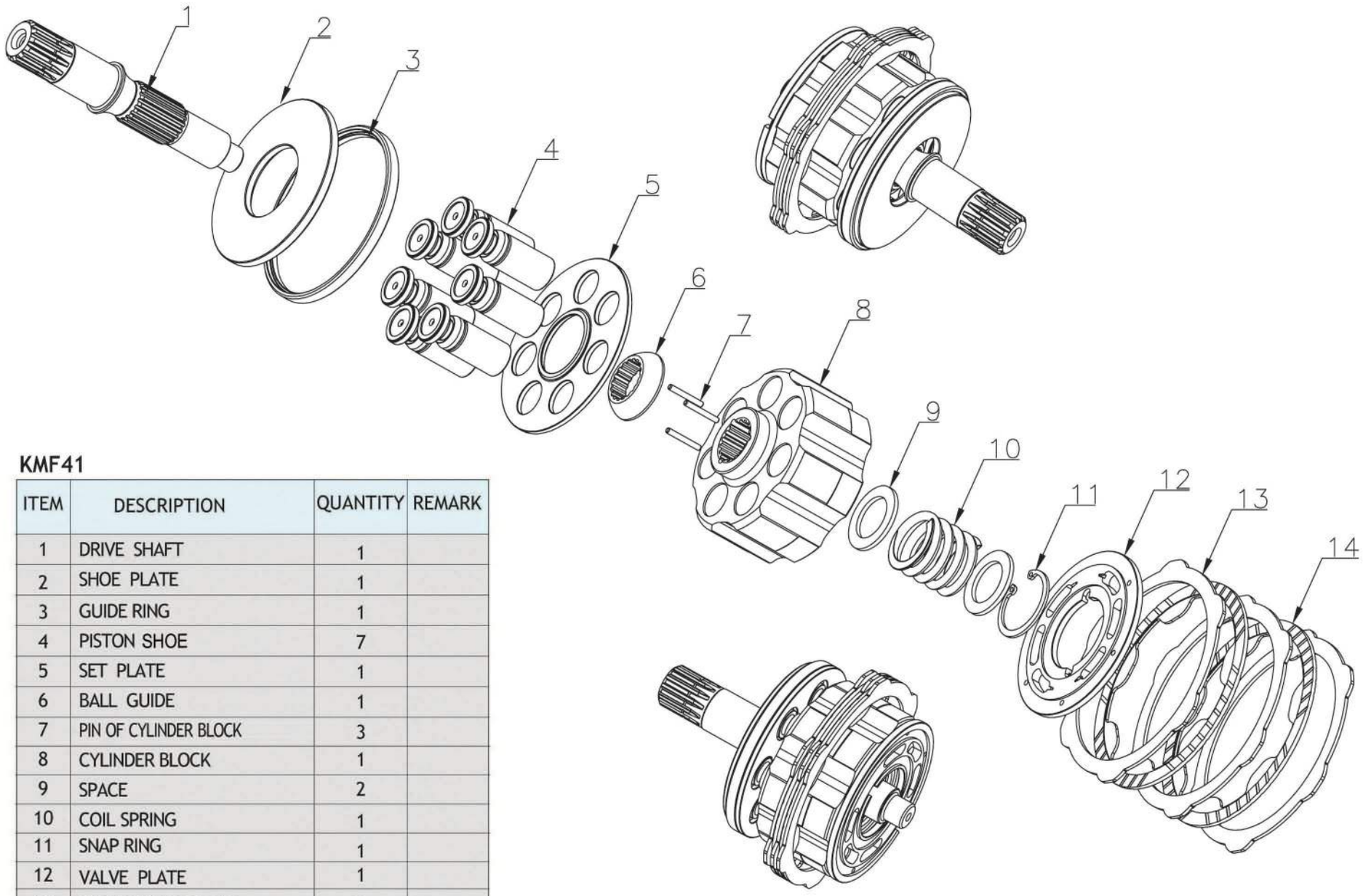

KMF41

ITEM	DESCRIPTION	QUANTITY	REMARK
1	DRIVE SHAFT	1	
2	SHOE PLATE	1	
3	GUIDE RING	1	
4	PISTON SHOE	7	
5	SET PLATE	1	
6	BALL GUIDE	1	
7	PIN OF CYLINDER BLOCK	3	
8	CYLINDER BLOCK	1	
9	SPACE	2	
10	COIL SPRING	1	
11	SNAP RING	1	
12	VALVE PLATE	1	
13	SEPARATION PLATE	3	
14	FRICTION PLATE	2	

HAN DOK HYDRAULIC

KMF125/230 FOR KOMATSU



KMF125			
ONE RING TYPE	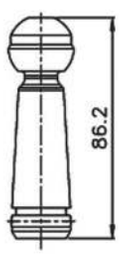	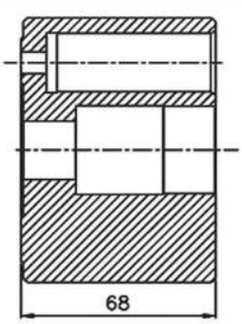	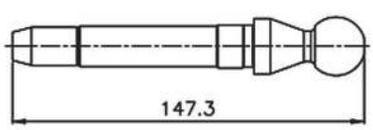
TWO RING TYPE	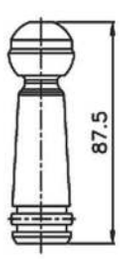	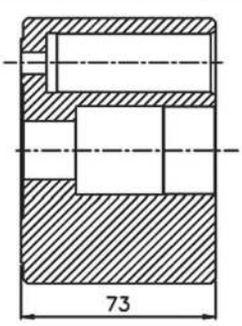	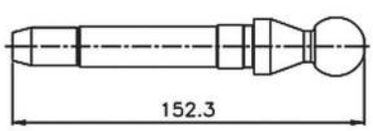

IT IS DIFFERENT SHAPE BETWEEN ONE RING TYPE AND TWO RING TYPE OF PISTON

IT IS DIFFERENT SHAPE BETWEEN KMF125 DRIVE SHAFT



KMF125(PC200-8)

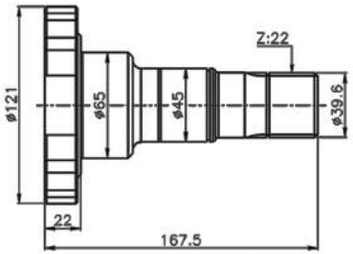



KMF125(PC200-7)

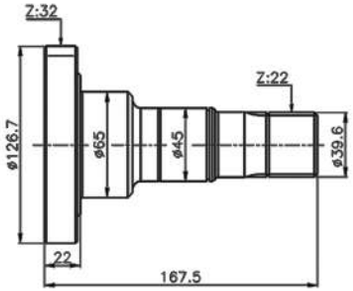

KMF125/230

ITEM	DESCRIPTION	QUANTITY	REMARK
1	VALVE PLATE (L/R)	1	
2	CYLINDER BLOCK	1	
3	COIL SPRING	1	
4	HOLDER	7	
5-A	CENTER PIN	1	L=147.3
5-B	CENTER PIN	1	L=152.3
6-A	PISTON (ONE RING TYPE)	7	
6-B	PISTON (TWO RING TYPE)	7	
7	SOCKET BOLT	7	
8	RETAINER PLATE	1	
9	DRIVE SHAFT	1	

HAN DOK HYDRAULIC

LPD25/28 FOR KOMATSU



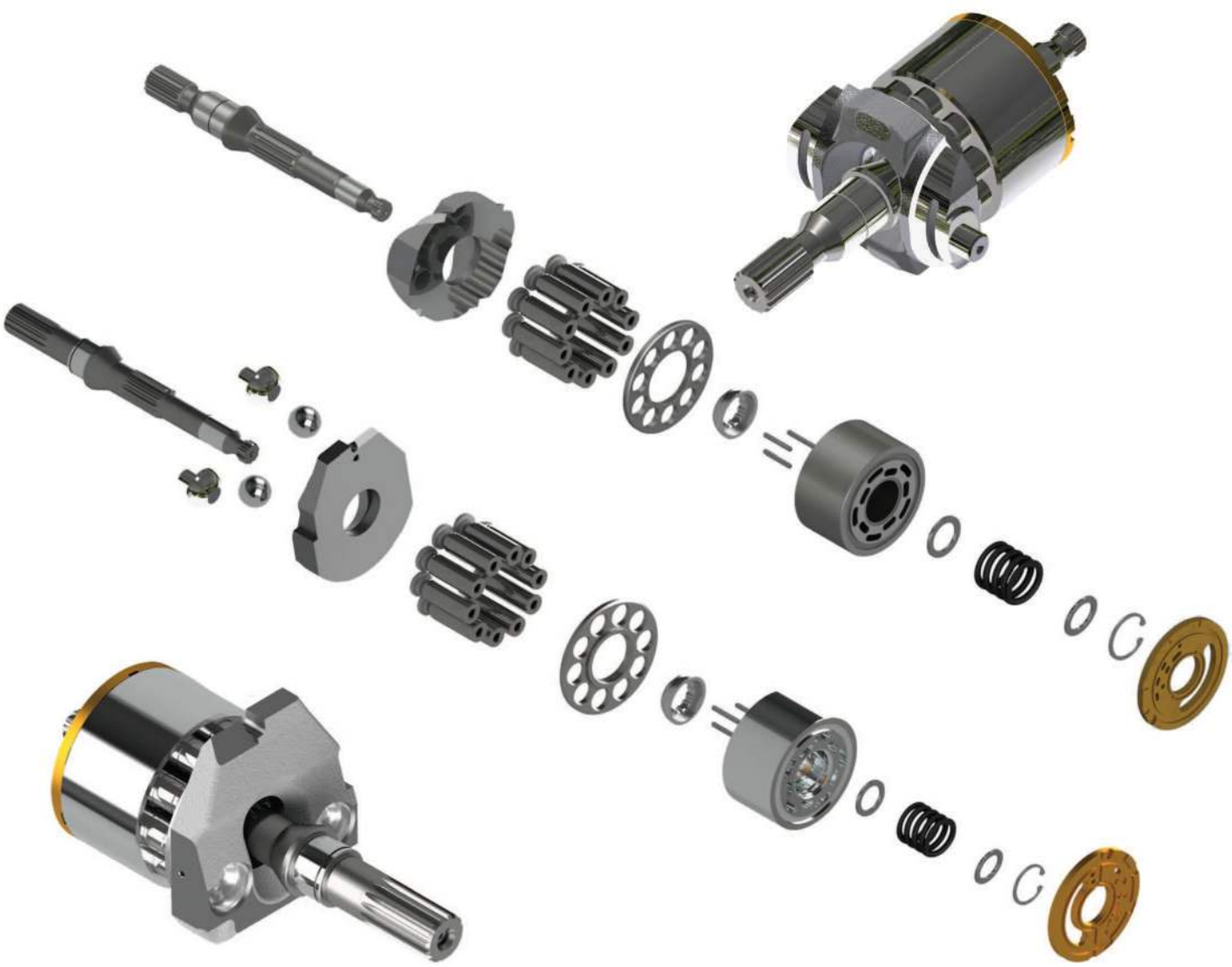

IT IS DIFFERENT SHAPE BETWEEN LPD25 AND LPD28

LPD28	LPD25
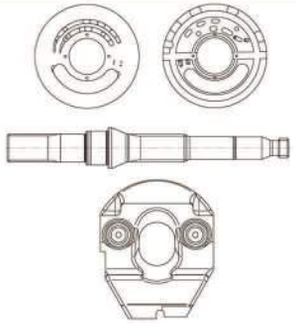	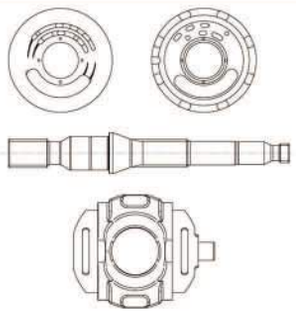

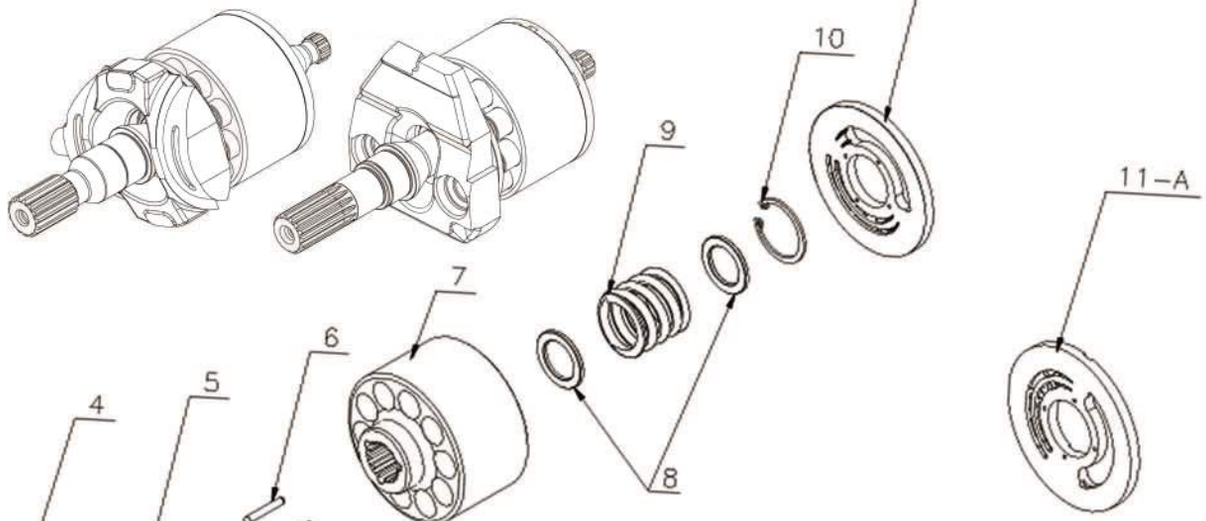

LPD25/28

ITEM	DESCRIPTION	QUANTITY	REMARK
1	DRIVE SHAFT - CRADLE TYPE	1	LPD25
1-A	DRIVE SHAFT - PIVOT TYPE	1	LPD28
2	CAM ROCKER - CRADLE TYPE	1	LPD25
2-A	CAM ROCKER - PIVOT TYPE	1	LPD28
3	PISTON SHOE	10	
4	SET PLATE	1	
5	BALL GUIDE	1	
6	PIN OF CYLINDER BLOCK	3	
7	CYLINDER BLOCK	1	
8	SPACE	2	
9	COIL SPRING	1	
10	SNAP RING	1	
11	VALVE PLATE - CRADLE TYPE	1	LPD25
11-A	VALVE PLATE - PIVOT TYPE	1	LPD28

HAN DOK HYDRAULIC

LPD45(PC78) FOR KOMATSU





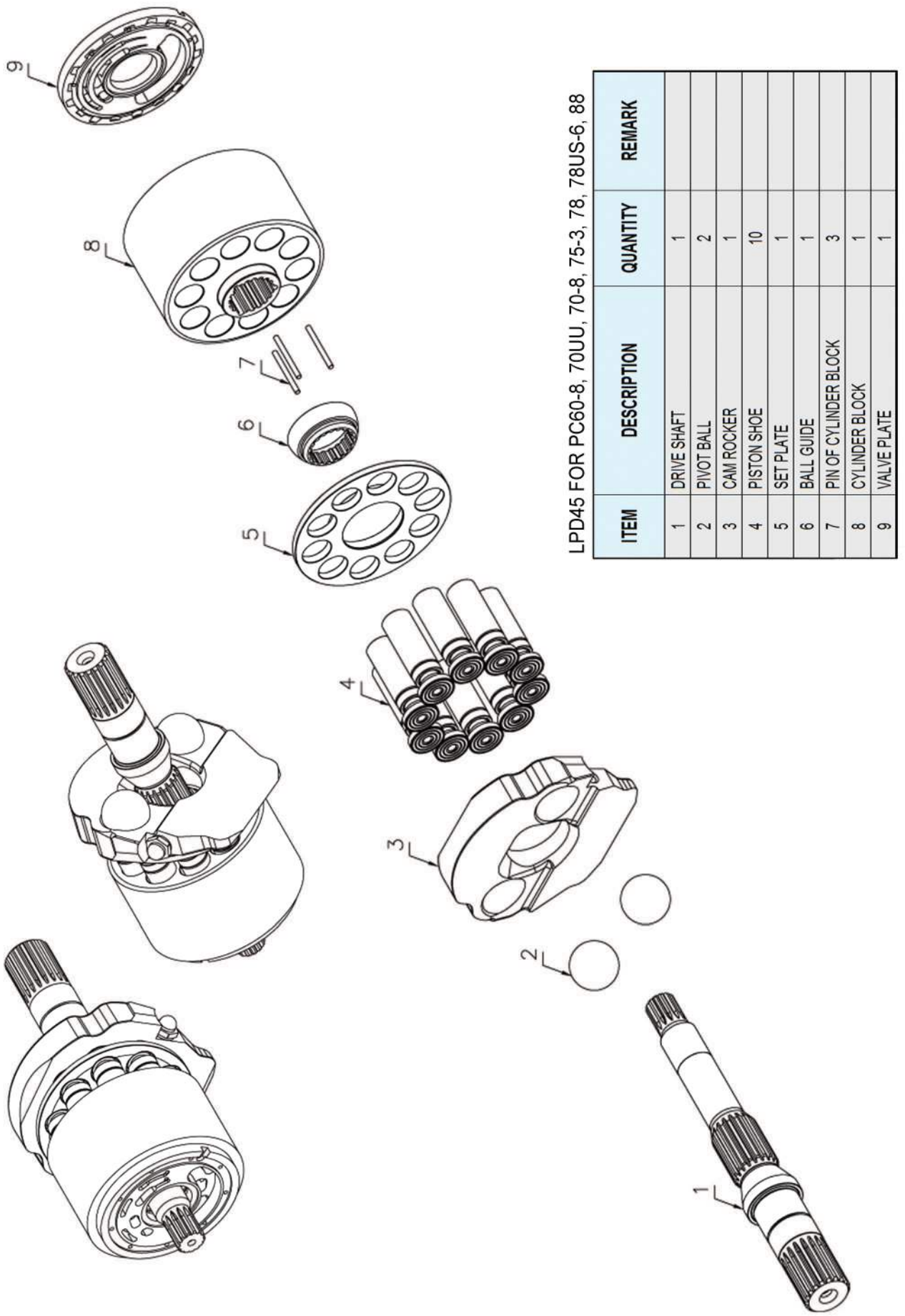

LPD45 FOR PC60-8, 70UU, 70-8, 75-3, 78, 78US-6, 88

ITEM	DESCRIPTION	QUANTITY	REMARK
1	DRIVE SHAFT	1	
2	PIVOT BALL	2	
3	CAM ROCKER	1	
4	PISTON SHOE	10	
5	SET PLATE	1	
6	BALL GUIDE	1	
7	PIN OF CYLINDER BLOCK	3	
8	CYLINDER BLOCK	1	
9	VALVE PLATE	1	

HAN DOK HYDRAULIC

LPV28/30/45 FOR KOMATSU





IT IS DIFFERENT SHAPE BETWEEN LPV28/45 AND LPV30

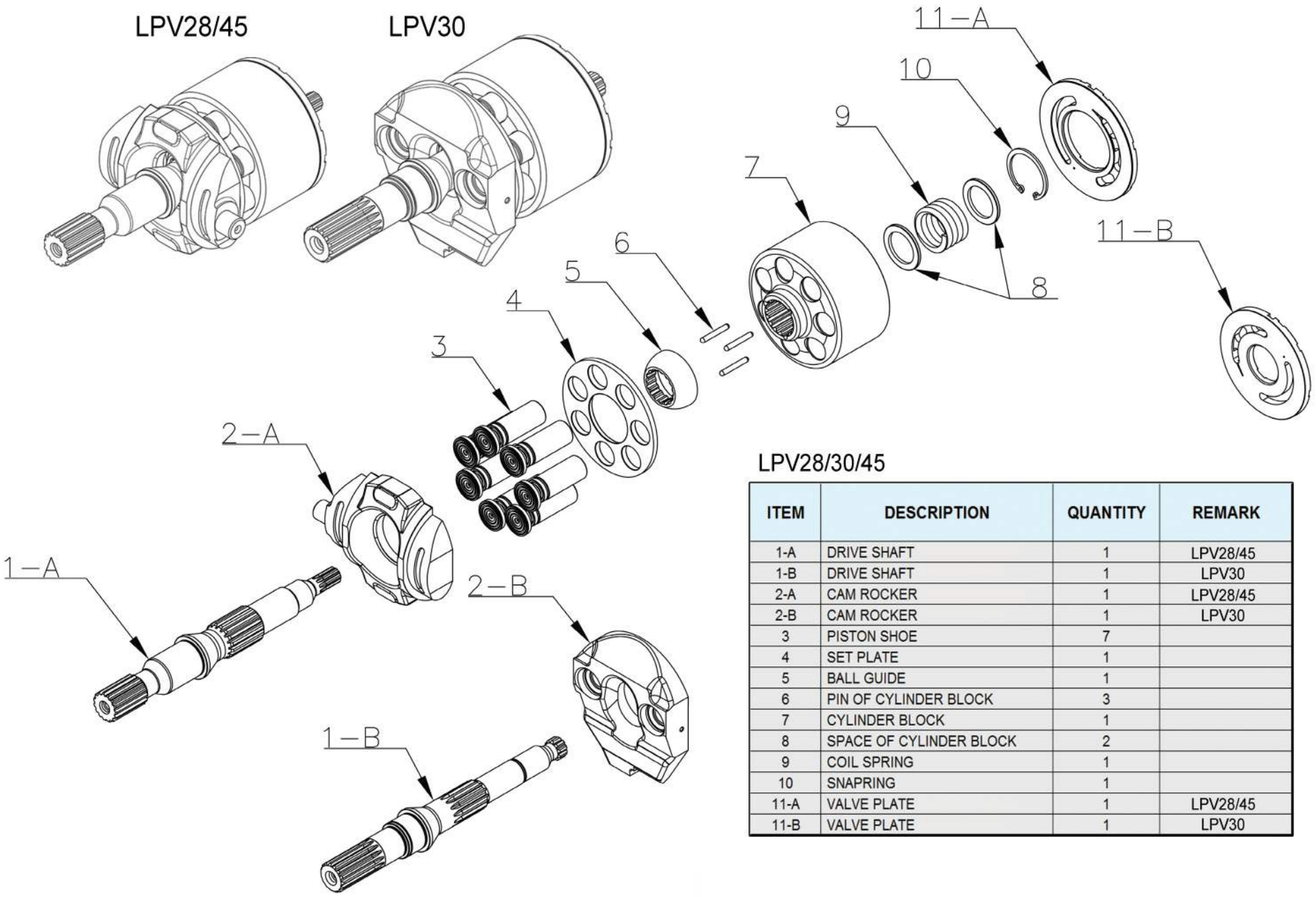

LPV28/30/45

ITEM	DESCRIPTION	QUANTITY	REMARK
1-A	DRIVE SHAFT	1	LPV28/45
1-B	DRIVE SHAFT	1	LPV30
2-A	CAM ROCKER	1	LPV28/45
2-B	CAM ROCKER	1	LPV30
3	PISTON SHOE	7	
4	SET PLATE	1	
5	BALL GUIDE	1	
6	PIN OF CYLINDER BLOCK	3	
7	CYLINDER BLOCK	1	
8	SPACE OF CYLINDER BLOCK	2	
9	COIL SPRING	1	
10	SNAPRING	1	
11-A	VALVE PLATE	1	LPV28/45
11-B	VALVE PLATE	1	LPV30

HAN DOK HYDRAULIC



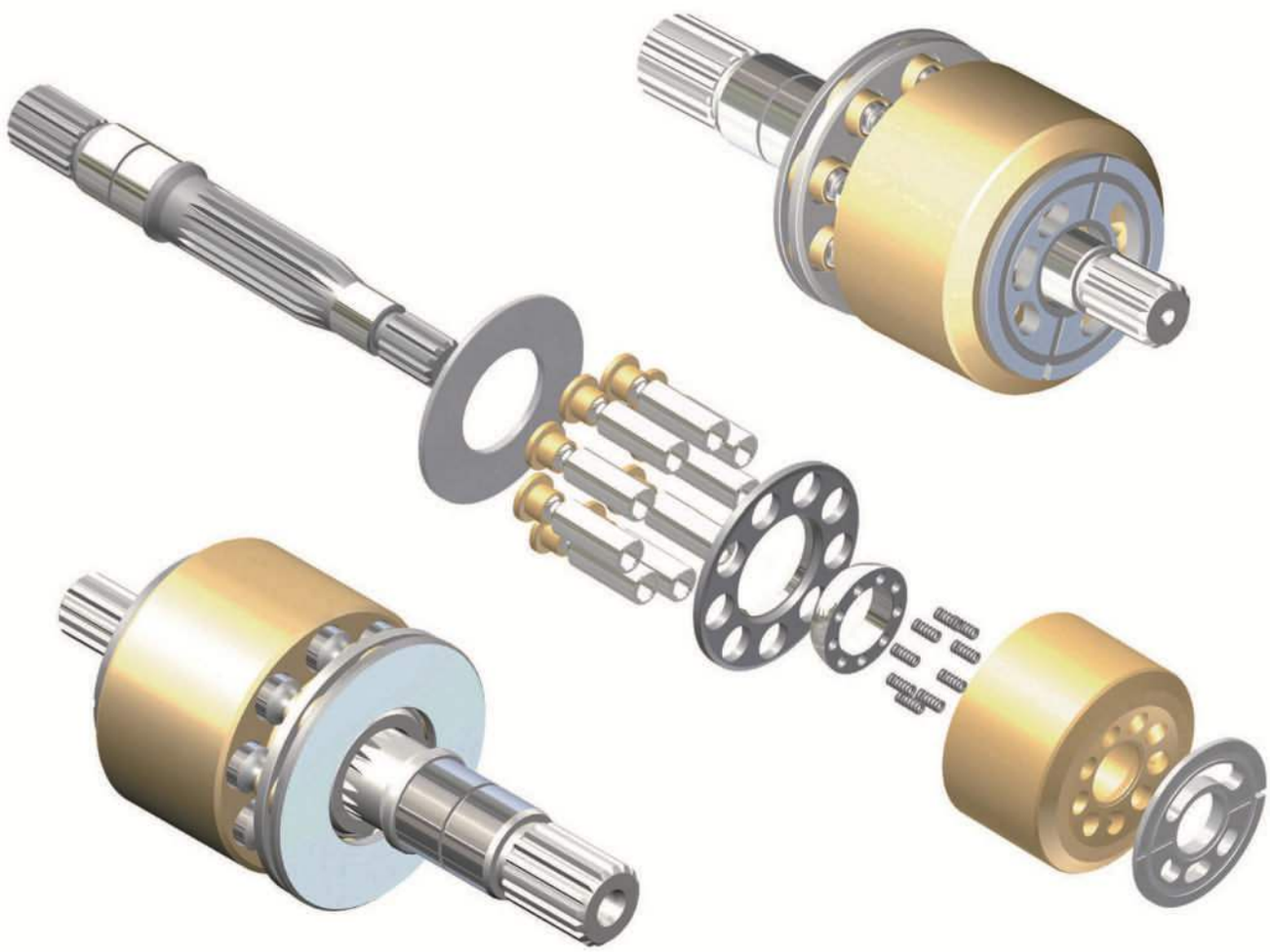

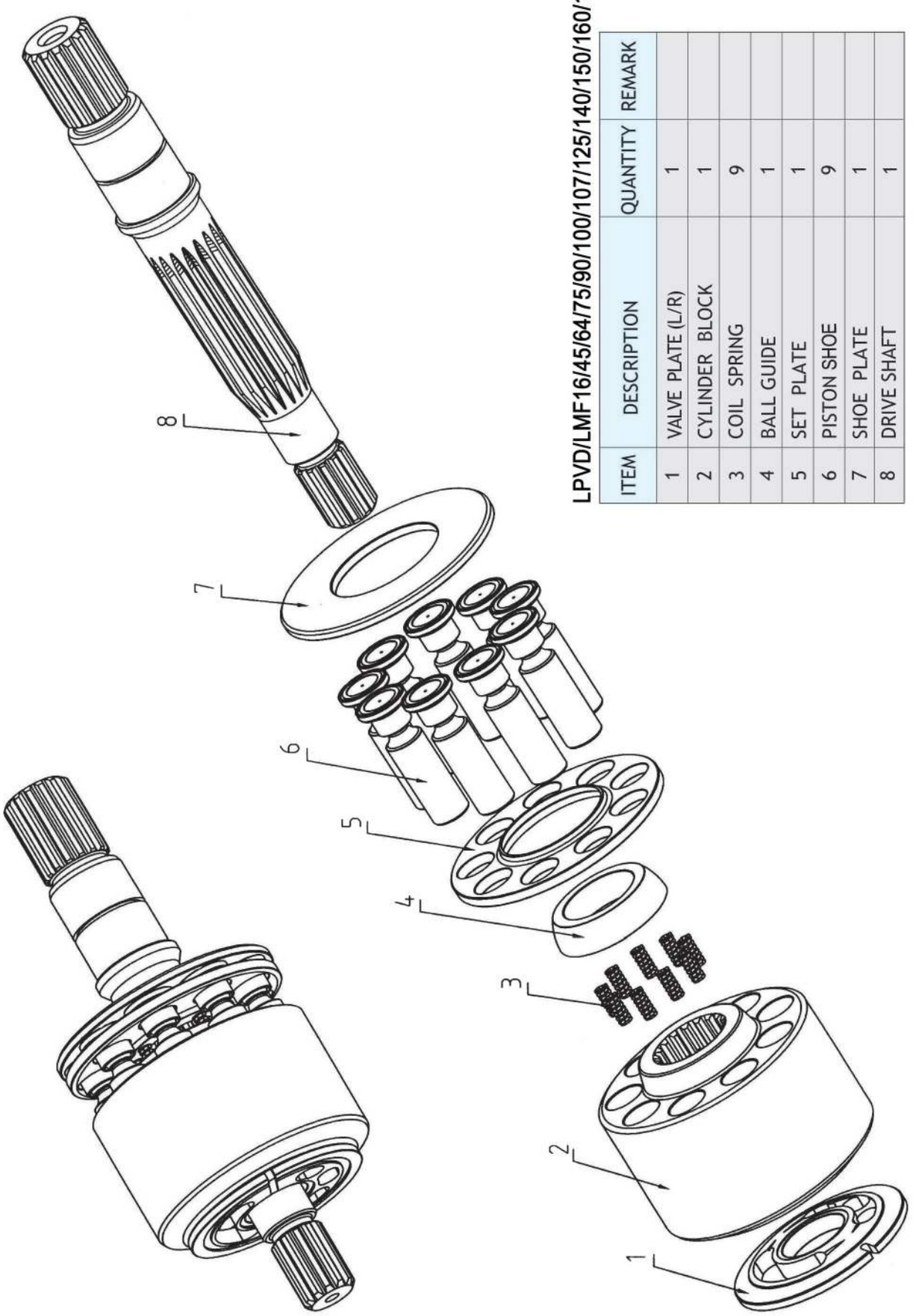

LPVD/LMF16/45/64/75/90/100/107/125/140/150/160/165

ITEM	DESCRIPTION	QUANTITY	REMARK
1	VALVE PLATE (L/R)	1	
2	CYLINDER BLOCK	1	
3	COIL SPRING	9	
4	BALL GUIDE	1	
5	SET PLATE	1	
6	PISTON SHOE	9	
7	SHOE PLATE	1	
8	DRIVE SHAFT	1	

HAN DOK HYDRAULIC



IT IS DIFFERENT SHAPE BETWEEN
M2X170&210 AND M2X170&210(CAT TYPE) PARTS

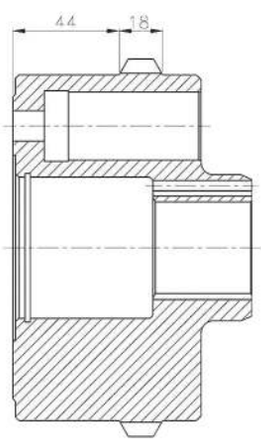

M2X170

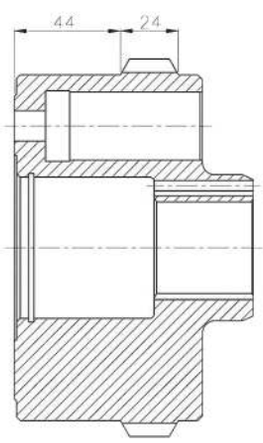

M2X170 (CAT TYPE)

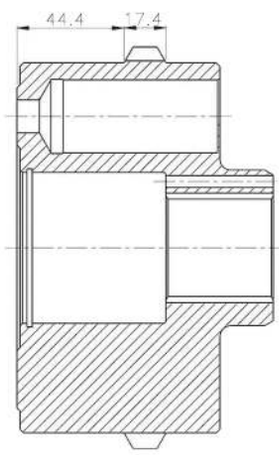

M2X210

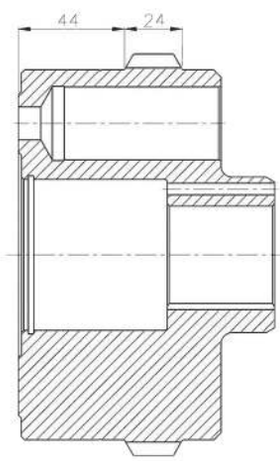

M2X210 (CAT TYPE)

IT IS DIFFERENT SHAPE BETWEEN M2X150 DRIVE SHAFT AND M2X150(CAT TYPE) DRIVE SHAFT

M2X150	M2X150 (CAT TYPE)
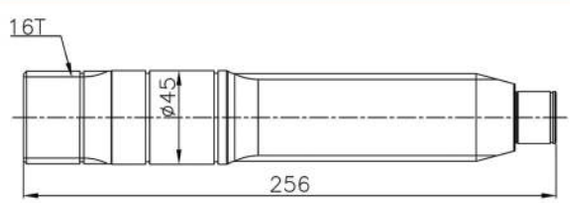	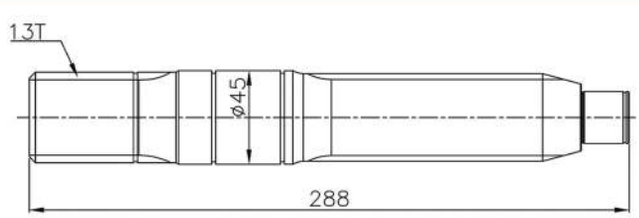

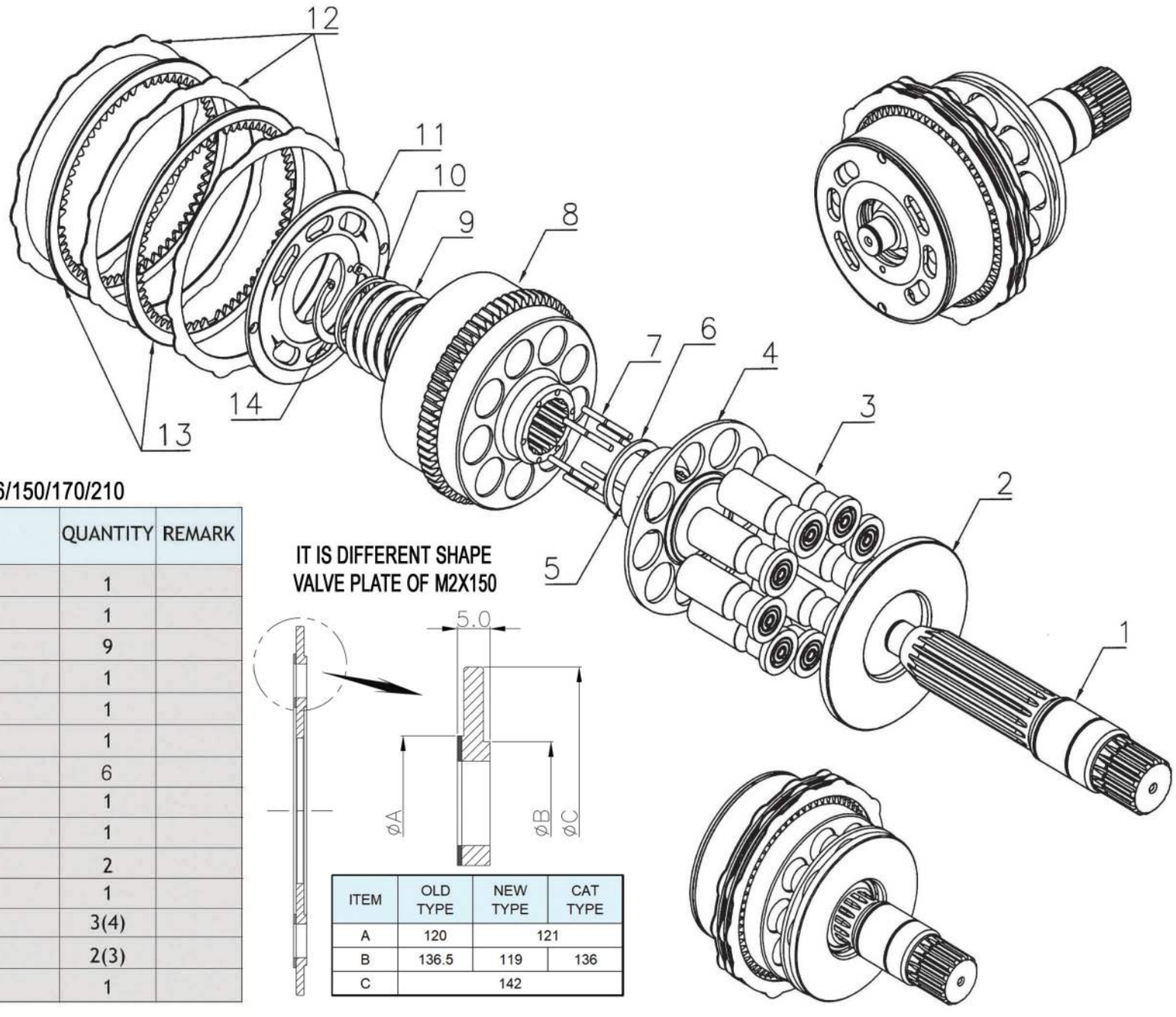

M2X55/63/96/120/128/146/150/170/210

ITEM	DESCRIPTION	QUANTITY	REMARK
1	DRIVE SHAFT	1	
2	SHOE PLATE	1	
3	PISTON SHOE	9	
4	SET PLATE	1	
5	BALL GUIDE	1	
6	SPACE OF BALL GUIDE	1	
7	PIN OF CYLINDER BLOCK	6	
8	CYLINDER BLOCK	1	
9	COIL SPRING	1	
10	SPACE	2	
11	VALVE PLATE	1	
12	SEPARATION PLATE	3(4)	
13	FRICTION PLATE	2(3)	
14	SNAP RING	1	

IT IS DIFFERENT SHAPE VALVE PLATE OF M2X150

ITEM	OLD TYPE	NEW TYPE	CAT TYPE
A	120	121	
B	136.5	119	136
C	142		

HAN DOK HYDRAULIC

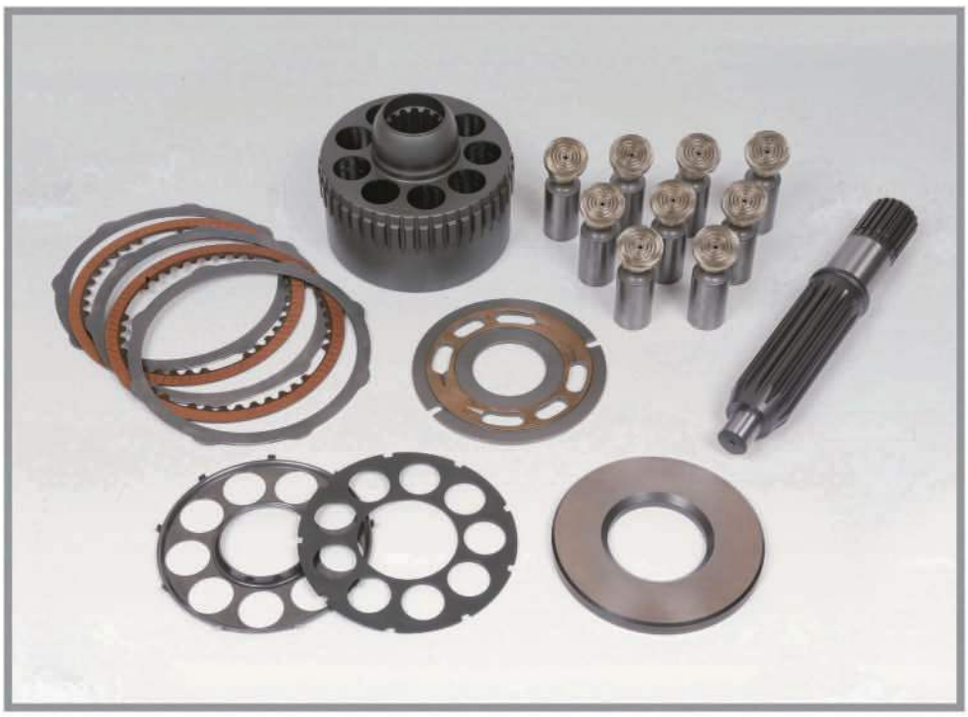



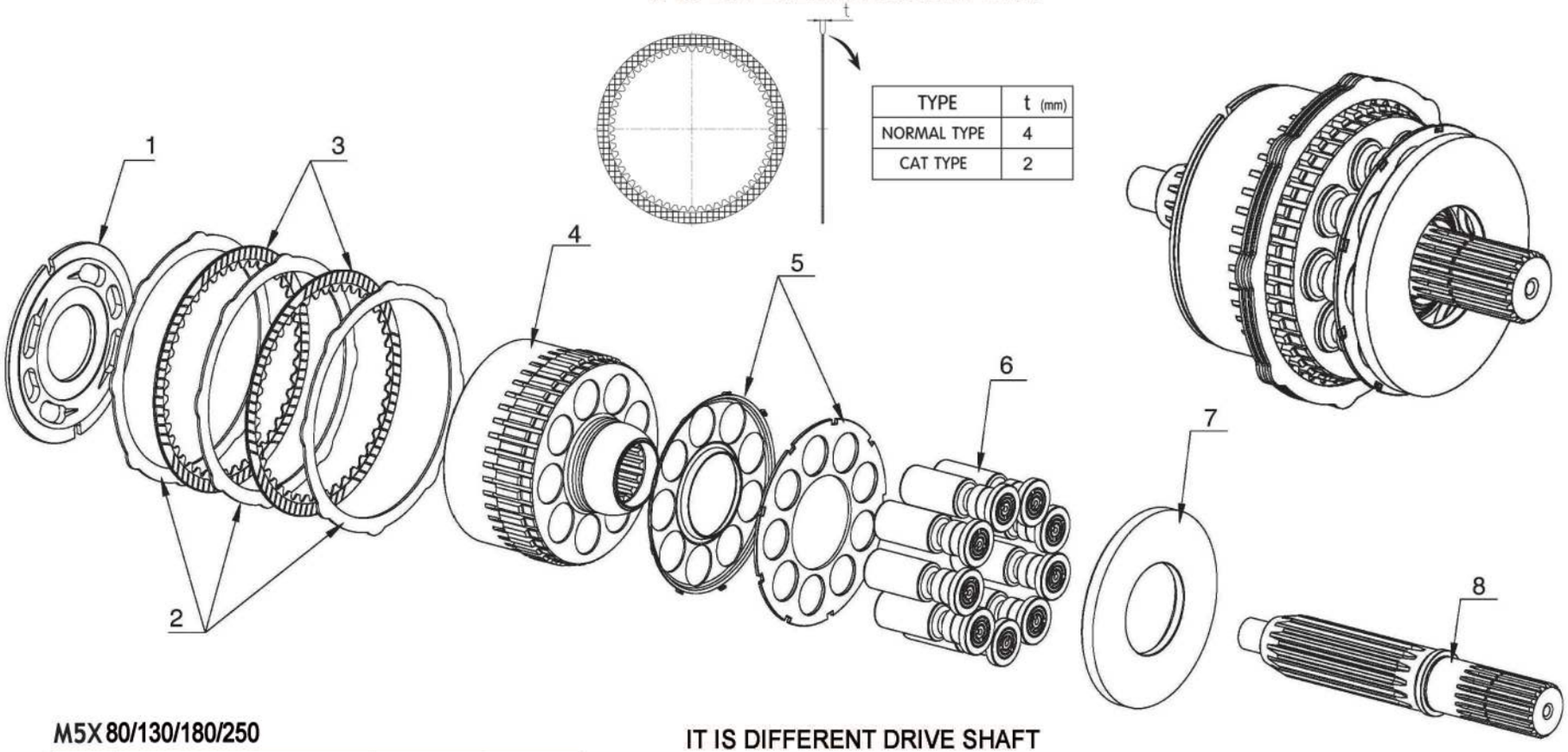

M5X 80/130/180/250

ITEM	DESCRIPTION	QUANTITY	REMARK
1	VALVE PLATE	1	
2	SEPARATION PLATE	3	
3	FRICTION PLATE	2	
4	CYLINDER BLOCK	1	
5	SET PLATE WITH SPRING	1SET	
6	PISTON SHOE	9	
7	SHOE PLATE	1	
8	DRIVE SHAFT	1	

IT IS DIFFERENT DRIVE SHAFT

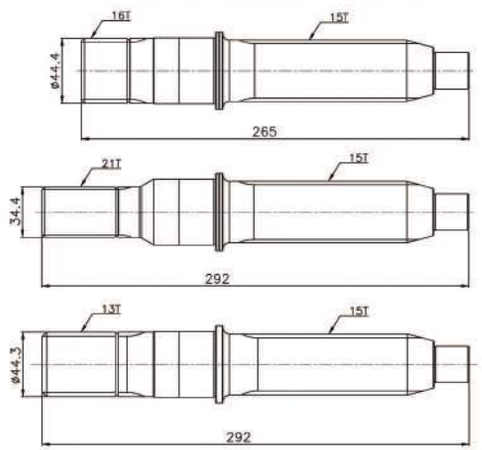

M5X180 CAT-16T TYPE

M5X180 CAT-21T TYPE

M5X180 NORMAL TYPE

HAN DOK HYDRAULIC

M2V SERIES FOR NABTESCO



IT IS DIFFERENT SHAPE BETWEEN M2V130(SK200-5) AND M2V150(SK200-1/3)

	M2V130(SK200-5)	M2V150(SK200-1/3)
BALL GUIDE & SET PLATE	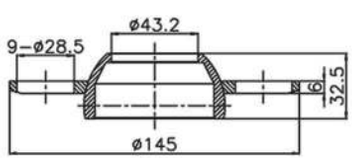	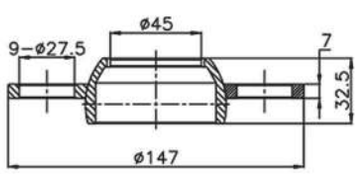
PISTON SHOE	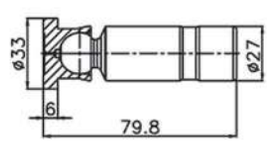	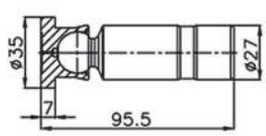
VALVE PLATE	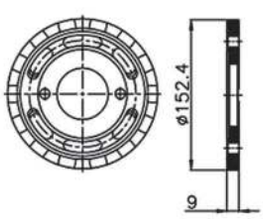	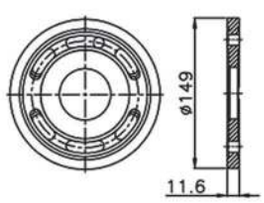
CYLINDER BLOCK	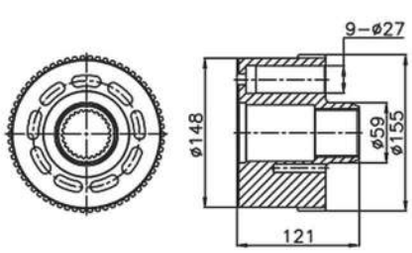	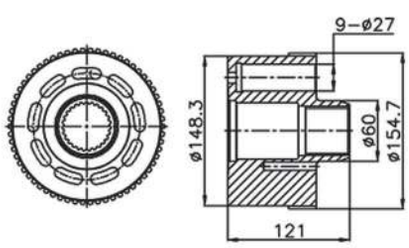

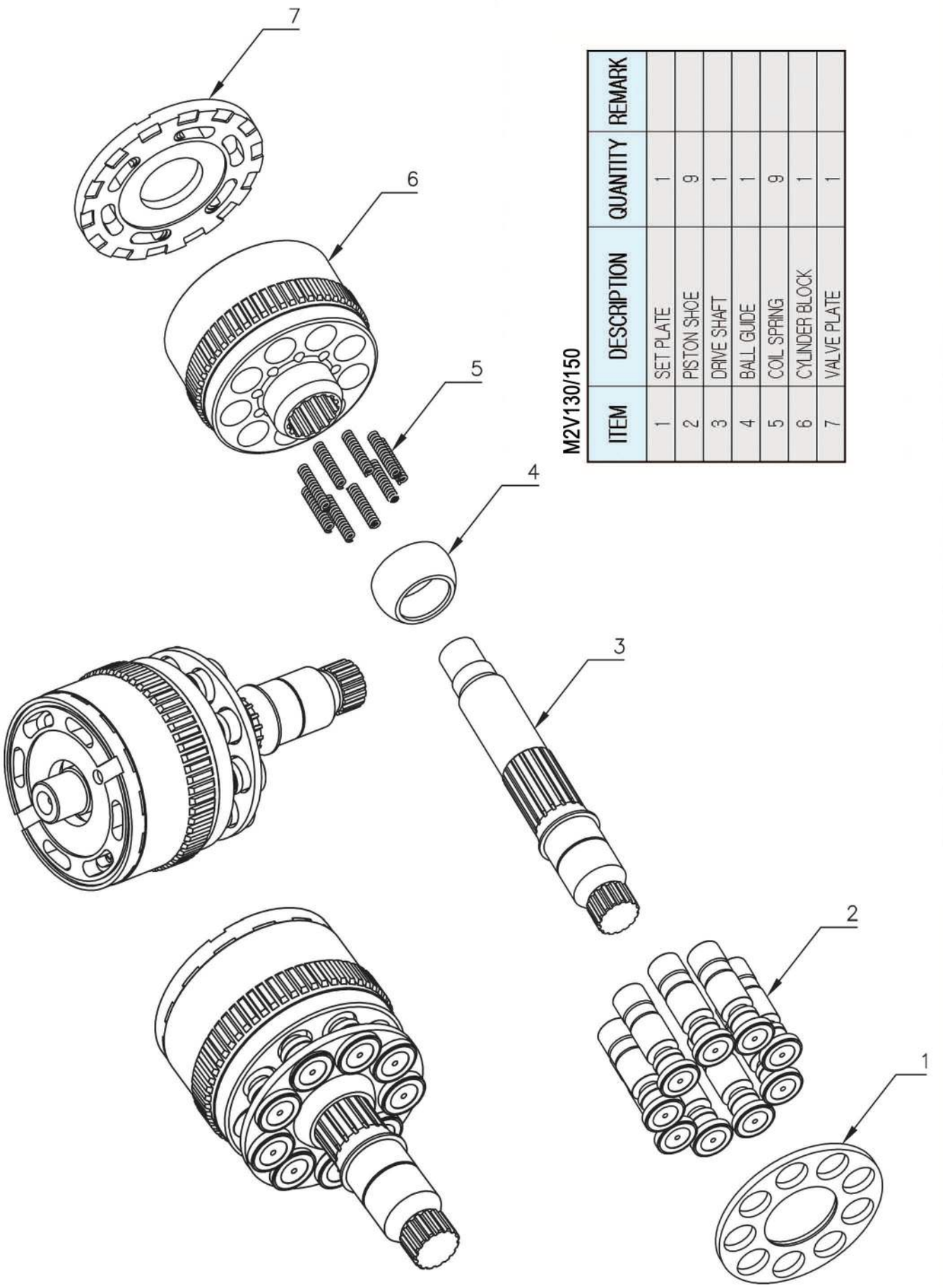

M2V130/150

ITEM	DESCRIPTION	QUANTITY	REMARK
1	SET PLATE	1	
2	PISTON SHOE	9	
3	DRIVE SHAFT	1	
4	BALL GUIDE	1	
5	COIL SPRING	9	
6	CYLINDER BLOCK	1	
7	VALVE PLATE	1	

HANDOK HYDRAULIC



IT IS M3V130/150(SK200-6) OF PARTS

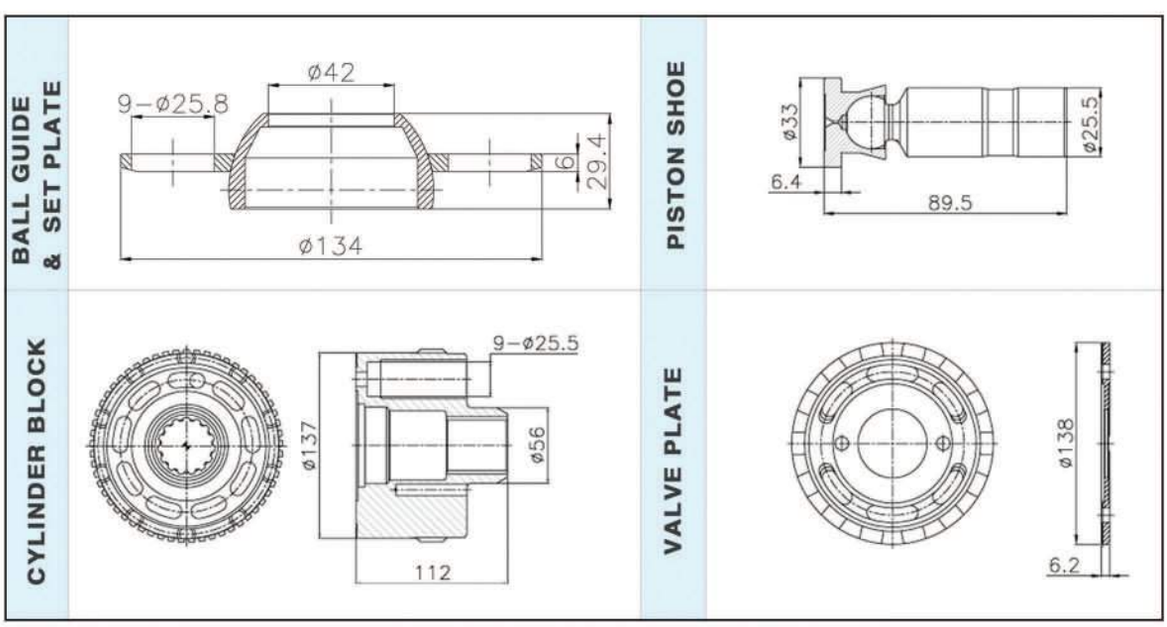

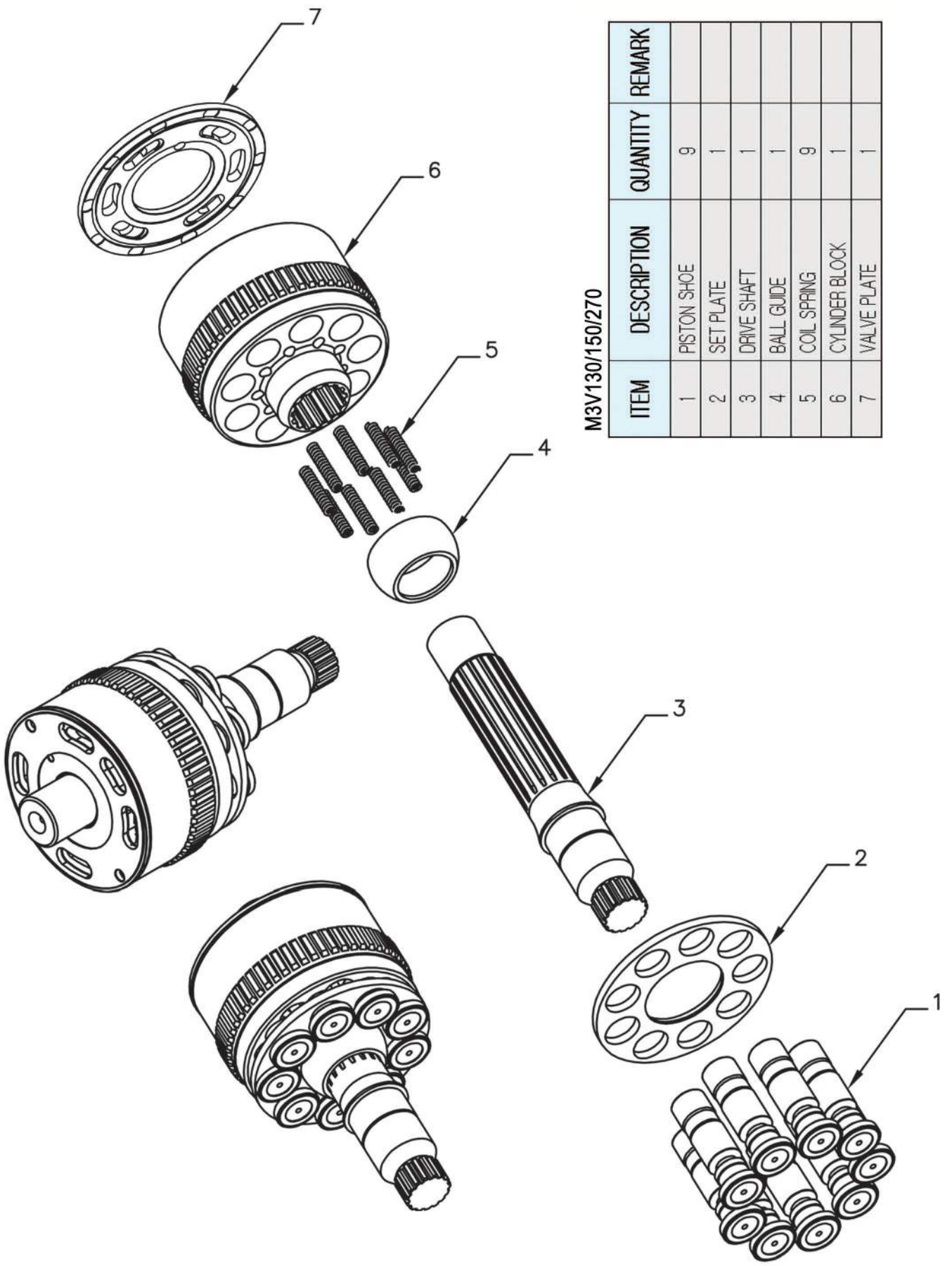

M3V130/150/270

ITEM	DESCRIPTION	QUANTITY	REMARK
1	PISTON SHOE	9	
2	SET PLATE	1	
3	DRIVE SHAFT	1	
4	BALL GUIDE	1	
5	COIL SPRING	9	
6	CYLINDER BLOCK	1	
7	VALVE PLATE	1	

HAN DOK HYDRAULIC



IT IS DIFFERENT SHAPE BETWEEN M4V147(SK200-6E) AND M4V150(SK220-6E)

	M4V147(SK200-6E)	M4V150(SK220-6E)
BALL GUIDE & SET PLATE	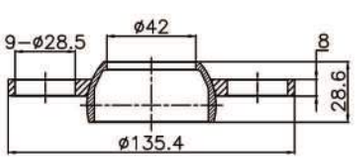	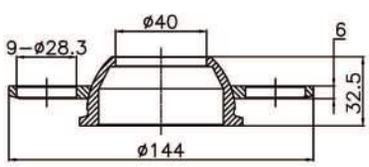
PISTON SHOE	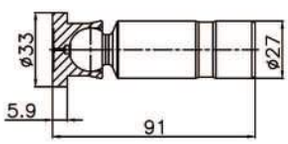	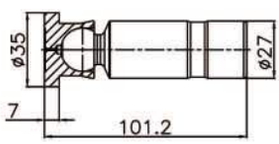
VALVE PLATE	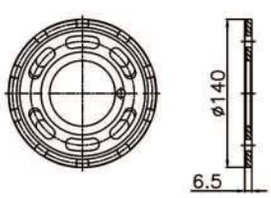	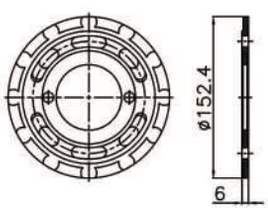
CYLINDER BLOCK	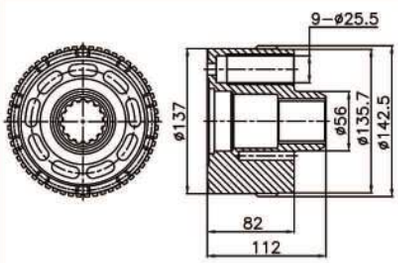	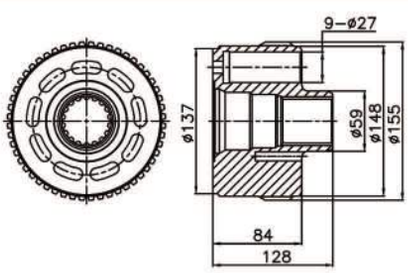

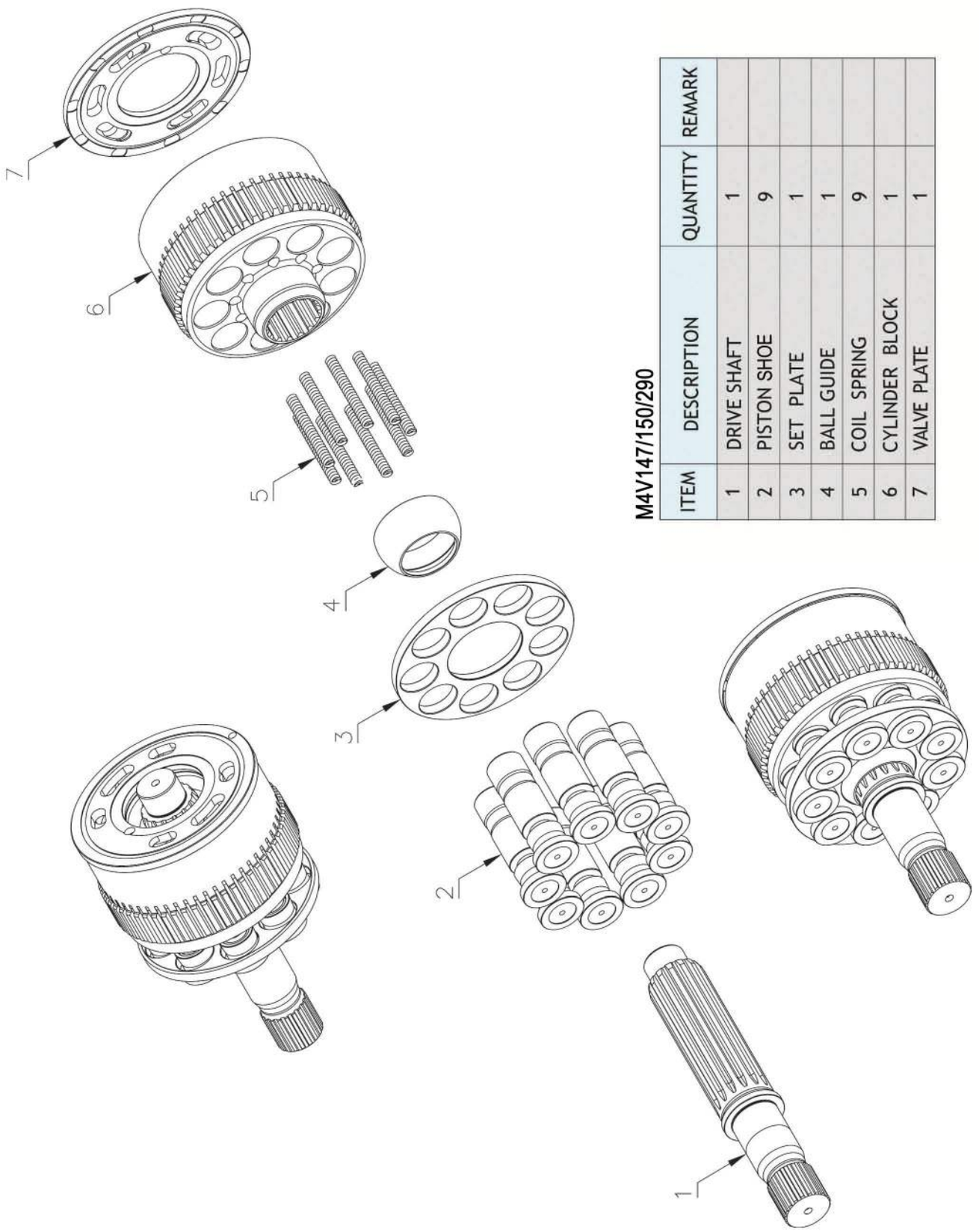

M4V147/150/290

ITEM	DESCRIPTION	QUANTITY	REMARK
1	DRIVE SHAFT	1	
2	PISTON SHOE	9	
3	SET PLATE	1	
4	BALL GUIDE	1	
5	COIL SPRING	9	
6	CYLINDER BLOCK	1	
7	VALVE PLATE	1	

HANDOK HYDRAULIC





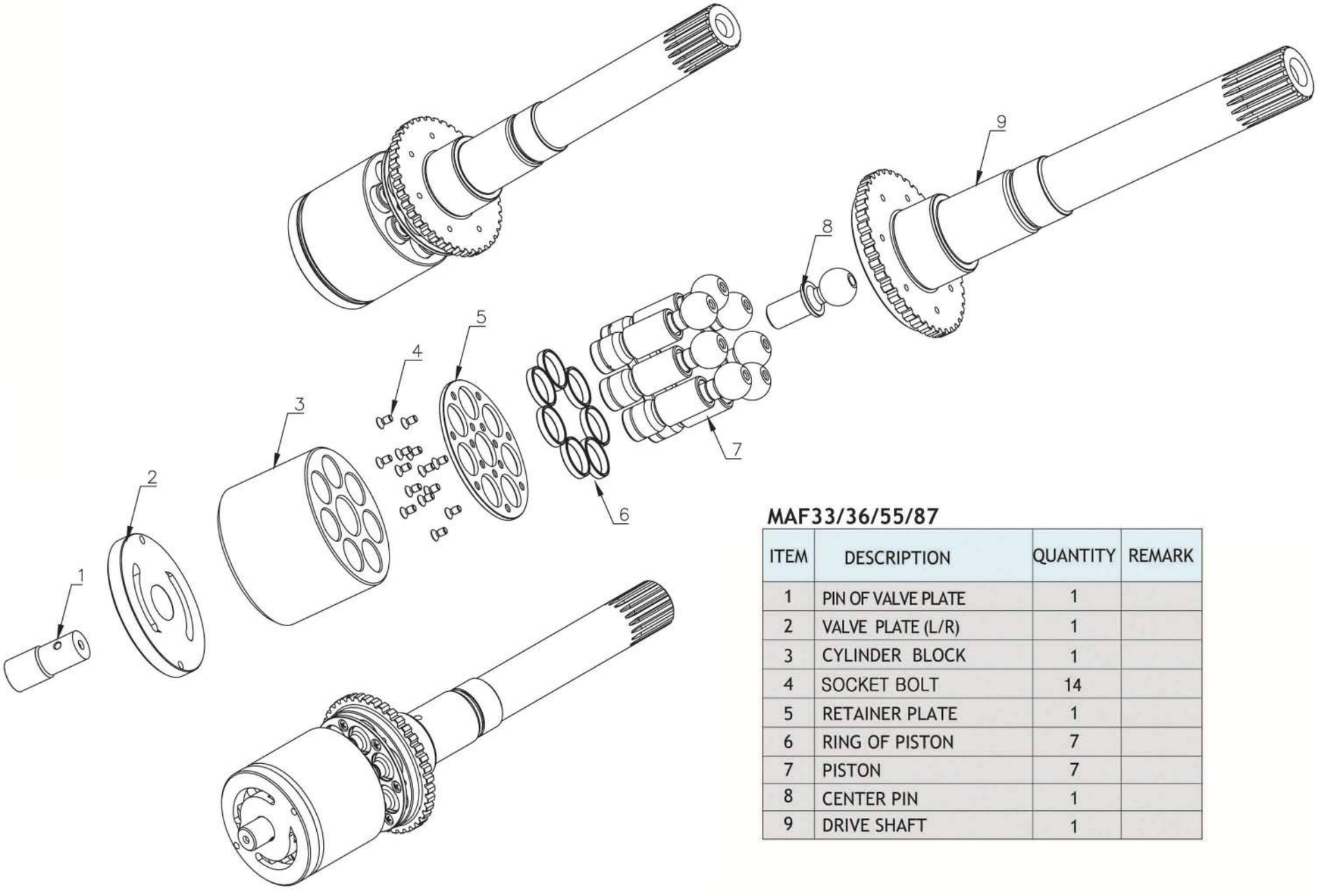

MAF33/36/55/87

ITEM	DESCRIPTION	QUANTITY	REMARK
1	PIN OF VALVE PLATE	1	
2	VALVE PLATE (L/R)	1	
3	CYLINDER BLOCK	1	
4	SOCKET BOLT	14	
5	RETAINER PLATE	1	
6	RING OF PISTON	7	
7	PISTON	7	
8	CENTER PIN	1	
9	DRIVE SHAFT	1	

HAN DOK HYDRAULIC





IT IS DIFFERENT SHAPE SWASH PLATE

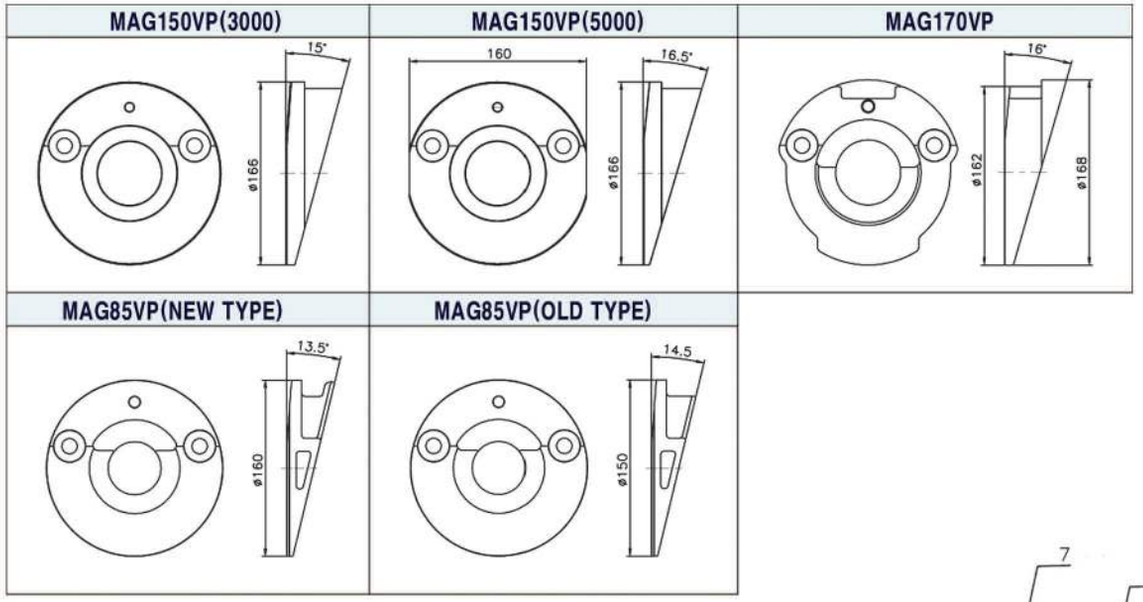

IT IS DIFFERENT SHAPE BETWEEN DRIVE SHAFT MAG SERIES AND MSF SERIES

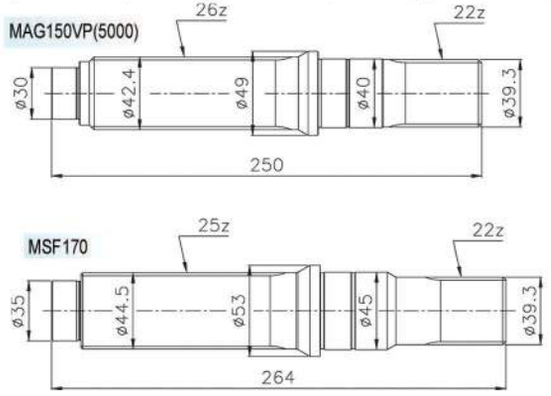

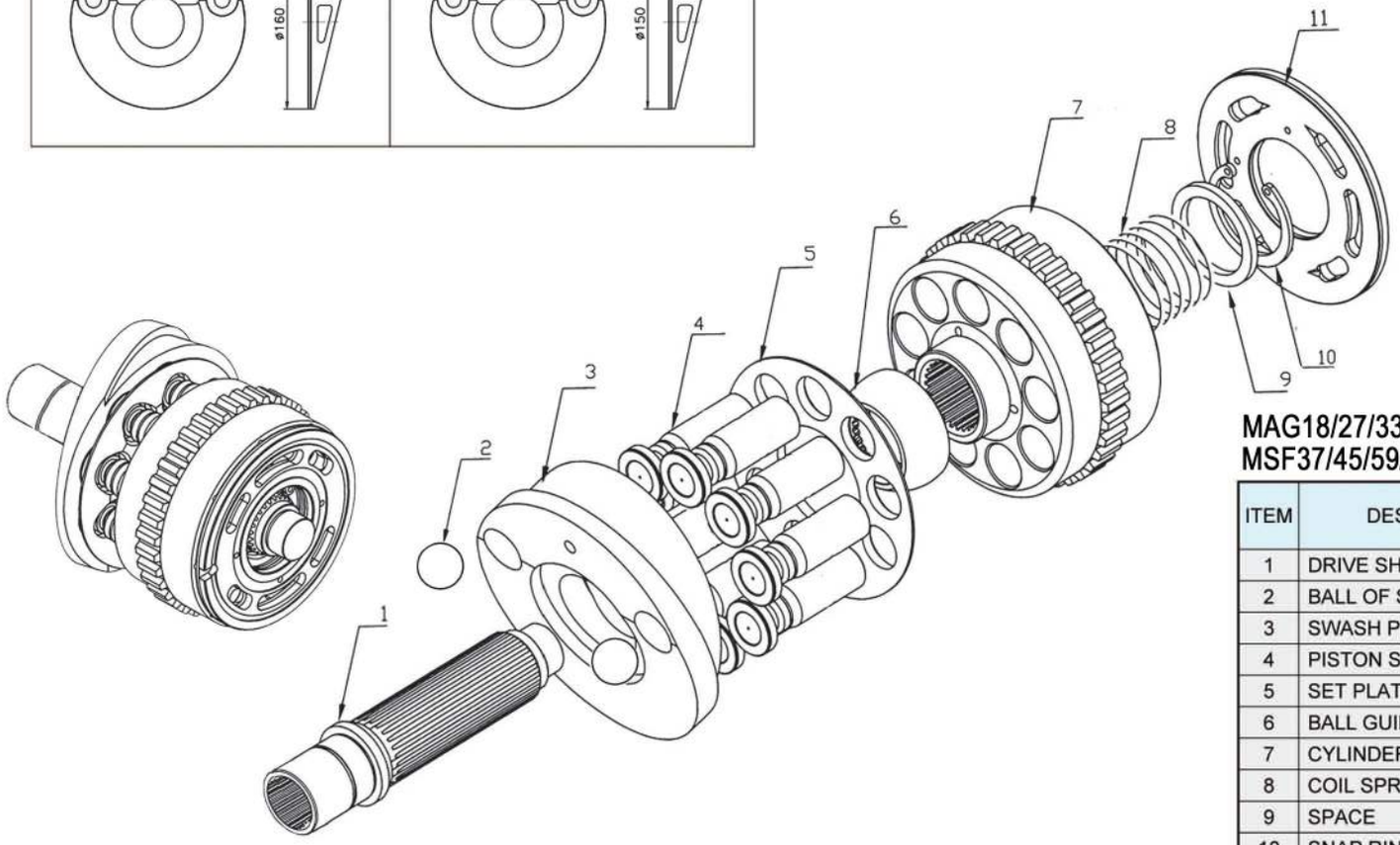

MAG18/27/33/85/150/170/200/330
MSF37/45/59/89/170/200/230/340

ITEM	DESCRIPTION	QUANTITY	REMARK
1	DRIVE SHAFT	1	
2	BALL OF SWASH PLATE	2	
3	SWASH PLATE	1	
4	PISTON SHOE	9	
5	SET PLATE	1	
6	BALL GUIDE	1	
7	CYLINDER BLOCK	1	
8	COIL SPRING	1	
9	SPACE	1	
10	SNAP RING	1	
11	VALVE PLATE	1	

HAN DOK HYDRAULIC



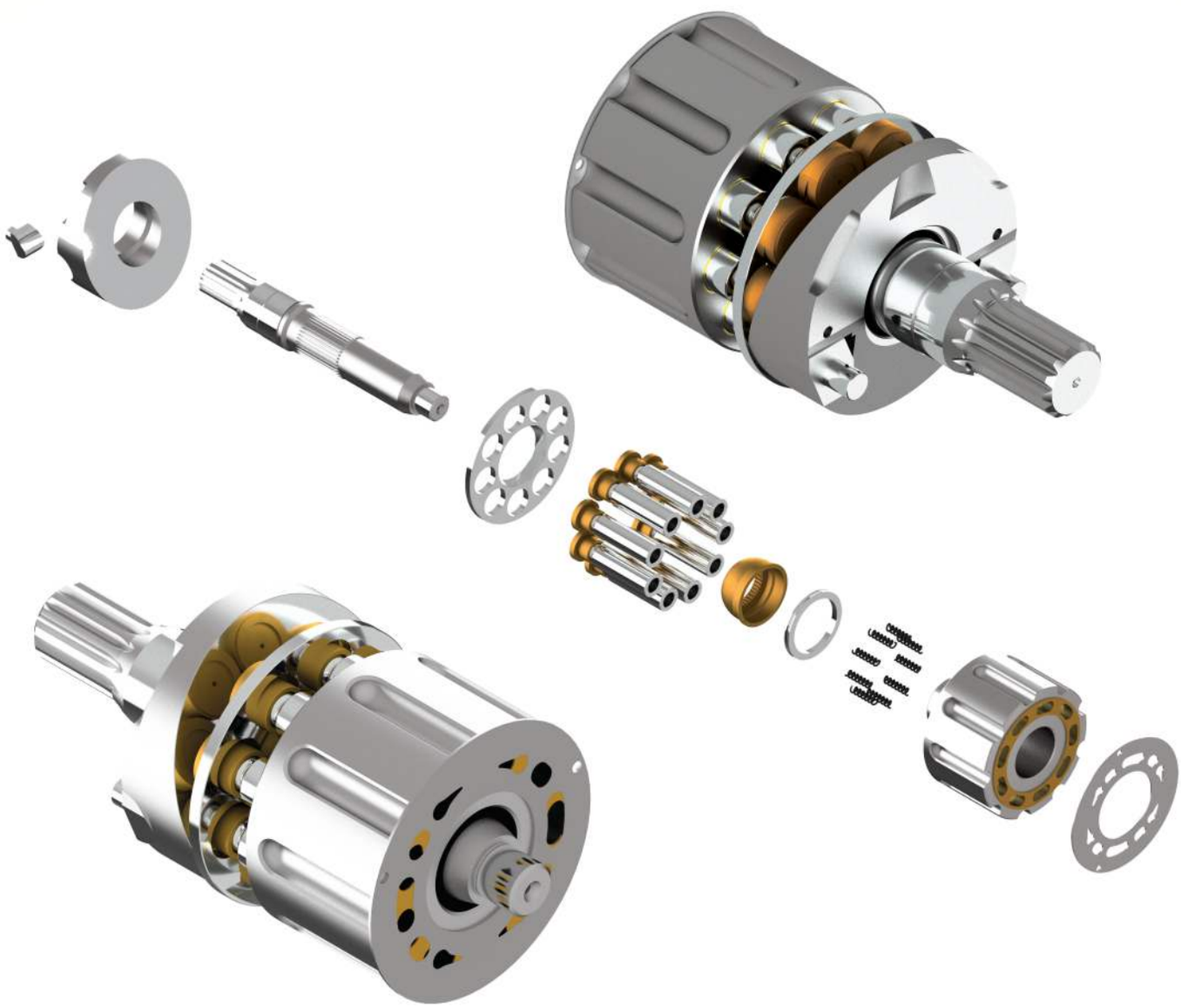

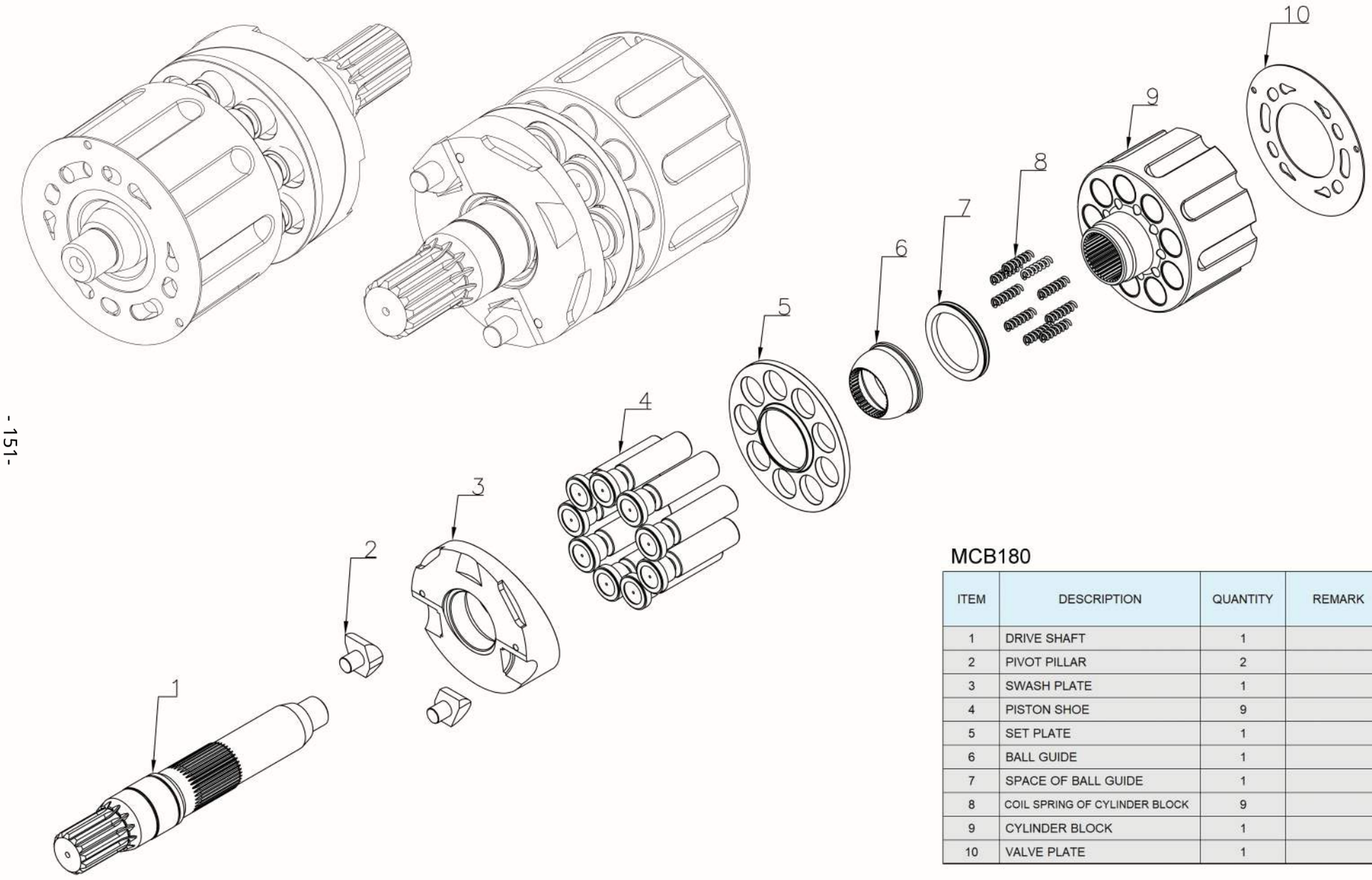

MCB180

ITEM	DESCRIPTION	QUANTITY	REMARK
1	DRIVE SHAFT	1	
2	PIVOT PILLAR	2	
3	SWASH PLATE	1	
4	PISTON SHOE	9	
5	SET PLATE	1	
6	BALL GUIDE	1	
7	SPACE OF BALL GUIDE	1	
8	COIL SPRING OF CYLINDER BLOCK	9	
9	CYLINDER BLOCK	1	
10	VALVE PLATE	1	

HAN DOK HYDRAULIC



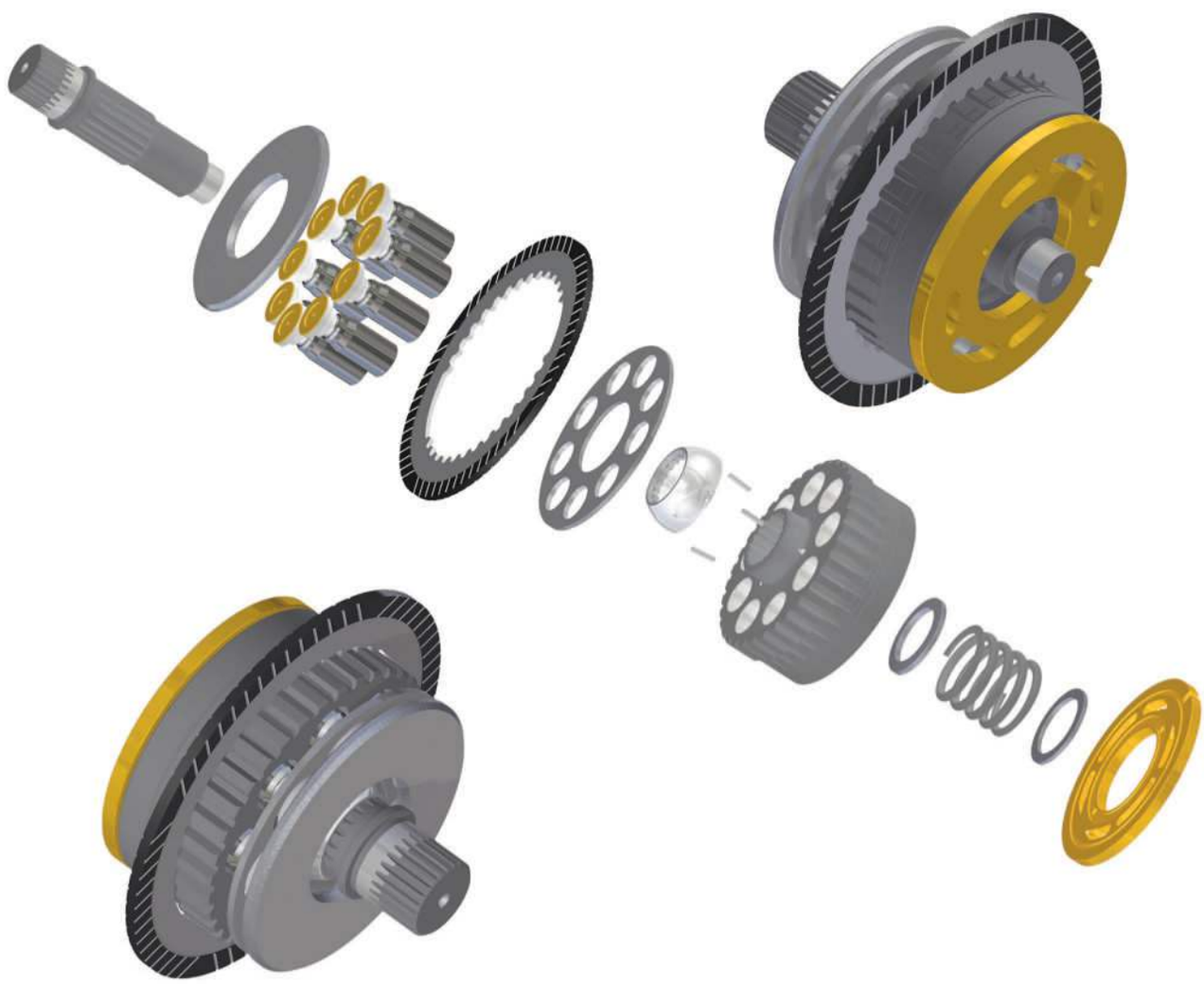

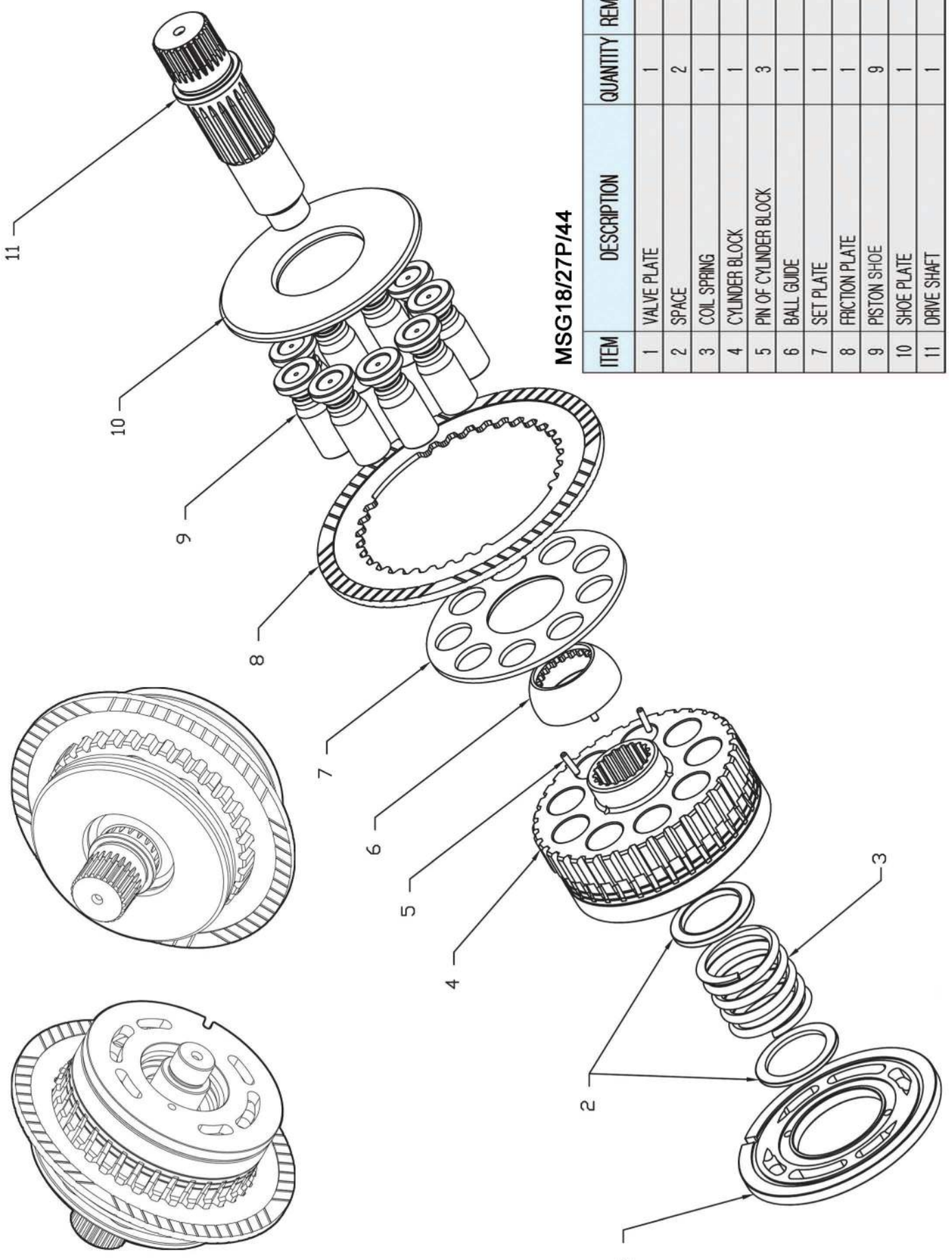

MSG18/27P/44

ITEM	DESCRIPTION	QUANTITY	REMARK
1	VALVE PLATE	1	
2	SPACE	2	
3	COIL SPRING	1	
4	CYLINDER BLOCK	1	
5	PIN OF CYLINDER BLOCK	3	
6	BALL GUIDE	1	
7	SET PLATE	1	
8	FRICTION PLATE	1	
9	PISTON SHOE	9	
10	SHOE PLATE	1	
11	DRIVE SHAFT	1	

HAN DOK HYDRAULIC



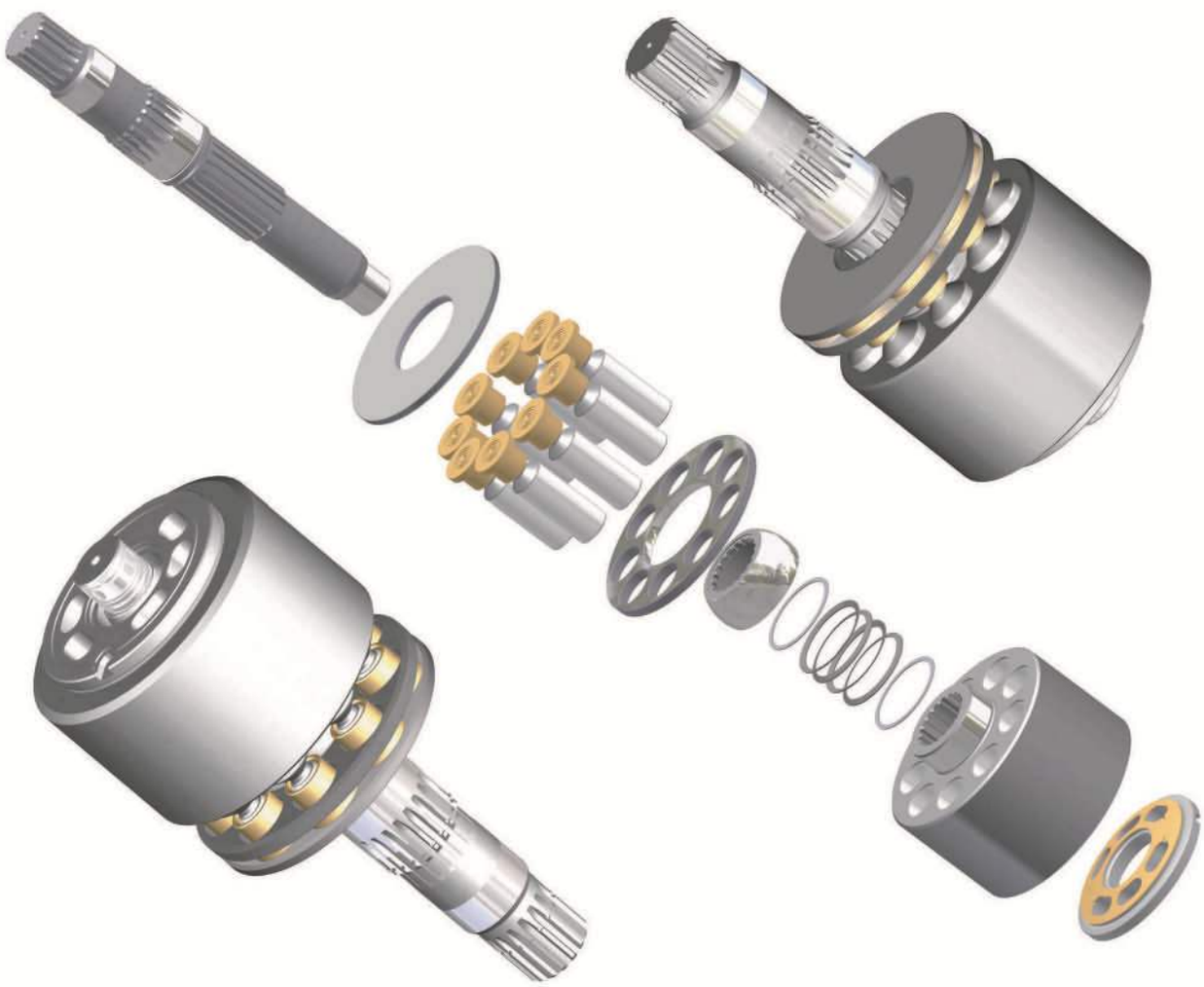

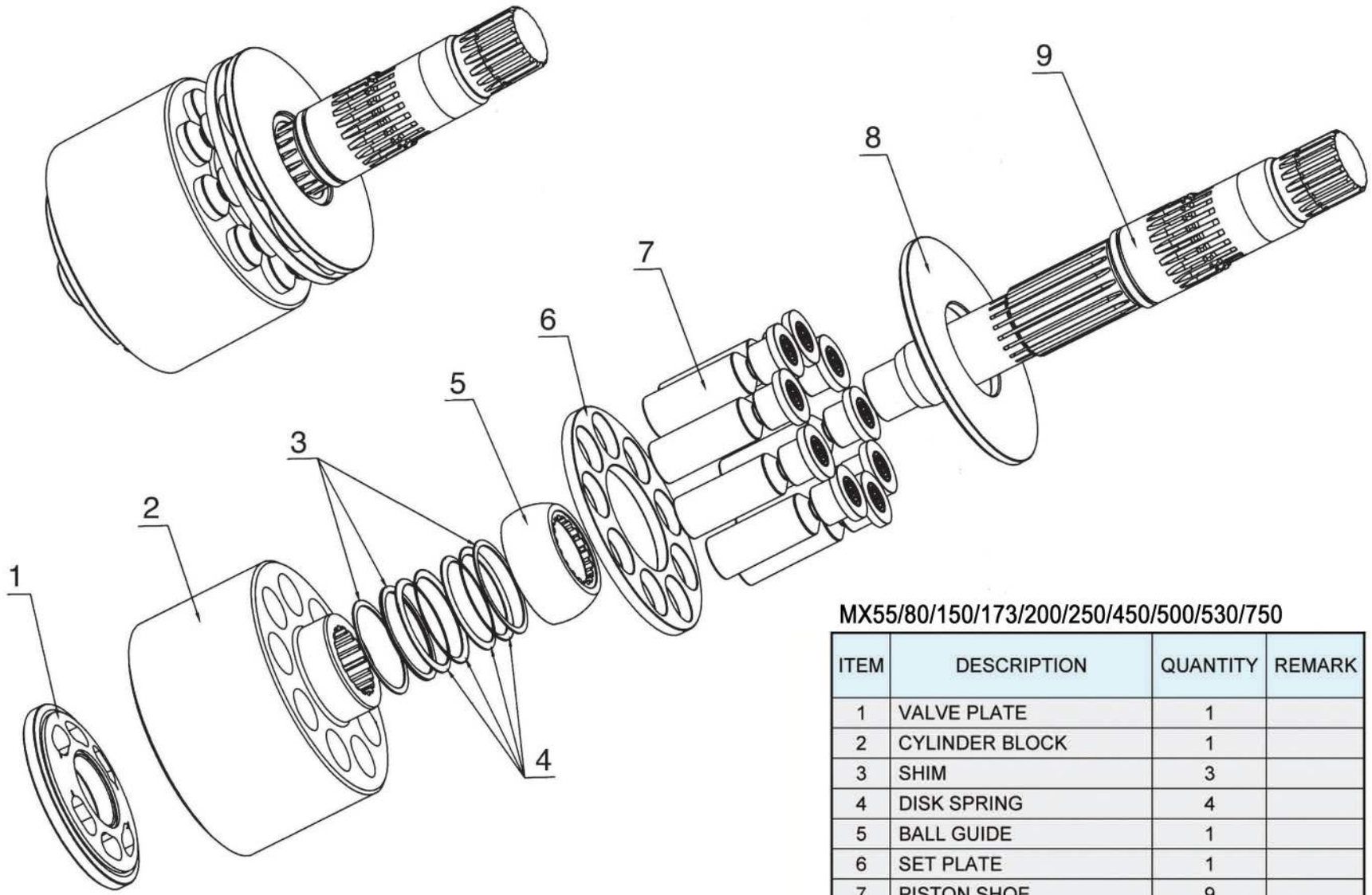

MX55/80/150/173/200/250/450/500/530/750

ITEM	DESCRIPTION	QUANTITY	REMARK
1	VALVE PLATE	1	
2	CYLINDER BLOCK	1	
3	SHIM	3	
4	DISK SPRING	4	
5	BALL GUIDE	1	
6	SET PLATE	1	
7	PISTON SHOE	9	
8	SHOE PLATE	1	
9	DRIVE SHAFT	1	

HAN DOK HYDRAULIC



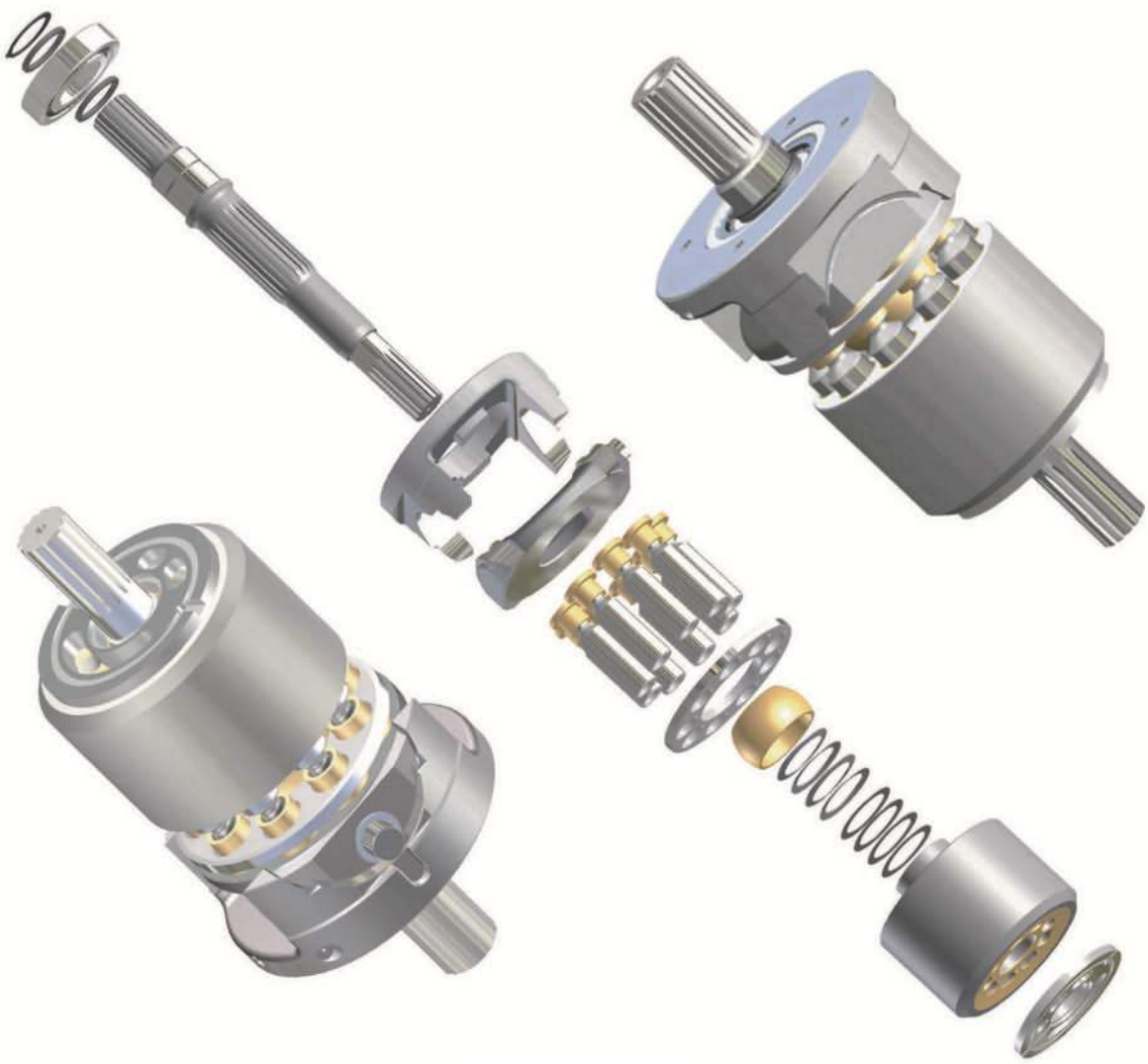

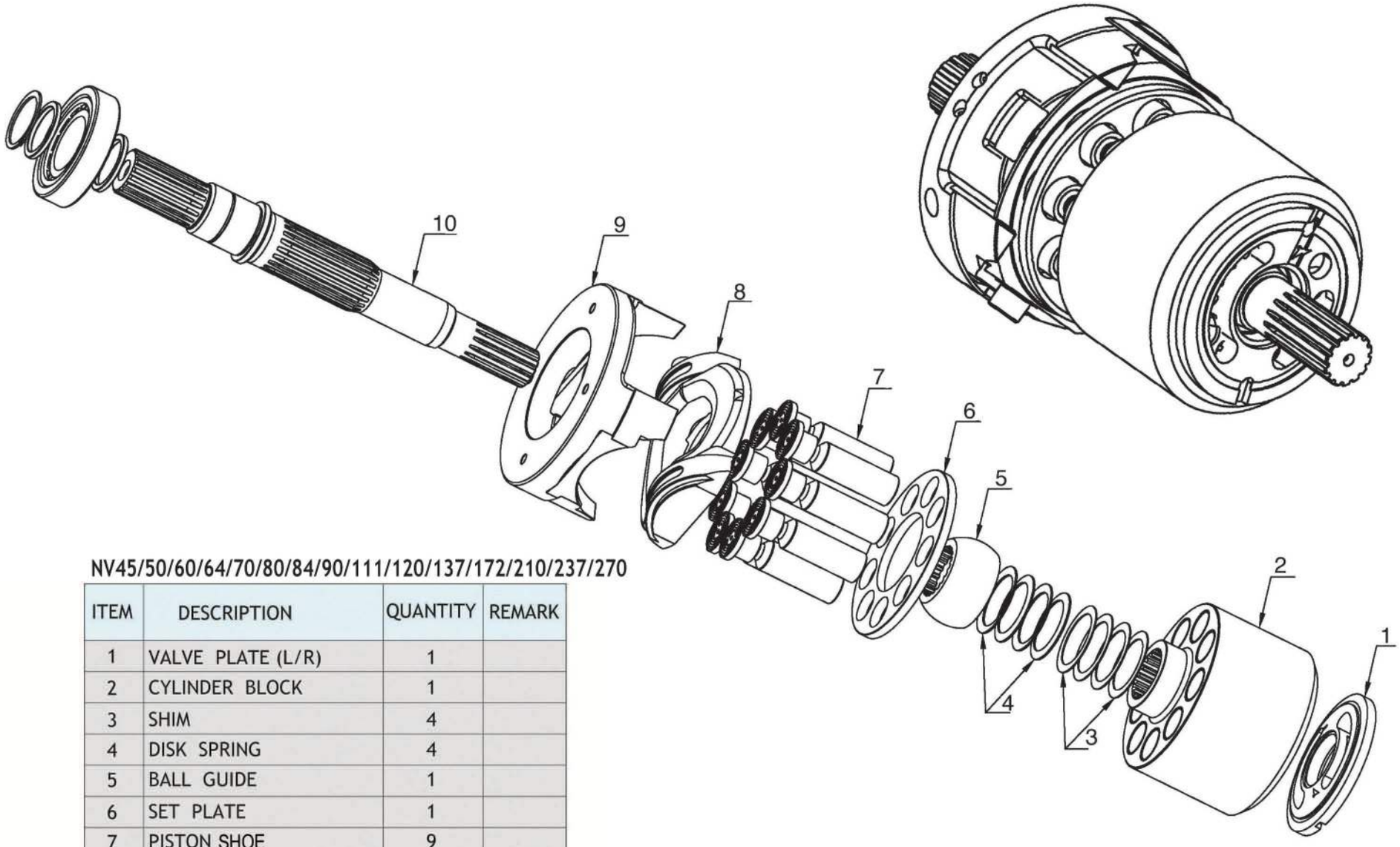

NV45/50/60/64/70/80/84/90/111/120/137/172/210/237/270

ITEM	DESCRIPTION	QUANTITY	REMARK
1	VALVE PLATE (L/R)	1	
2	CYLINDER BLOCK	1	
3	SHIM	4	
4	DISK SPRING	4	
5	BALL GUIDE	1	
6	SET PLATE	1	
7	PISTON SHOE	9	
8	SWASH PLATE	1	
9	SUPPORT	1	
10	DRIVE SHAFT (L/R)	1	

HAN DOK HYDRAULIC

NVK45/DNB08





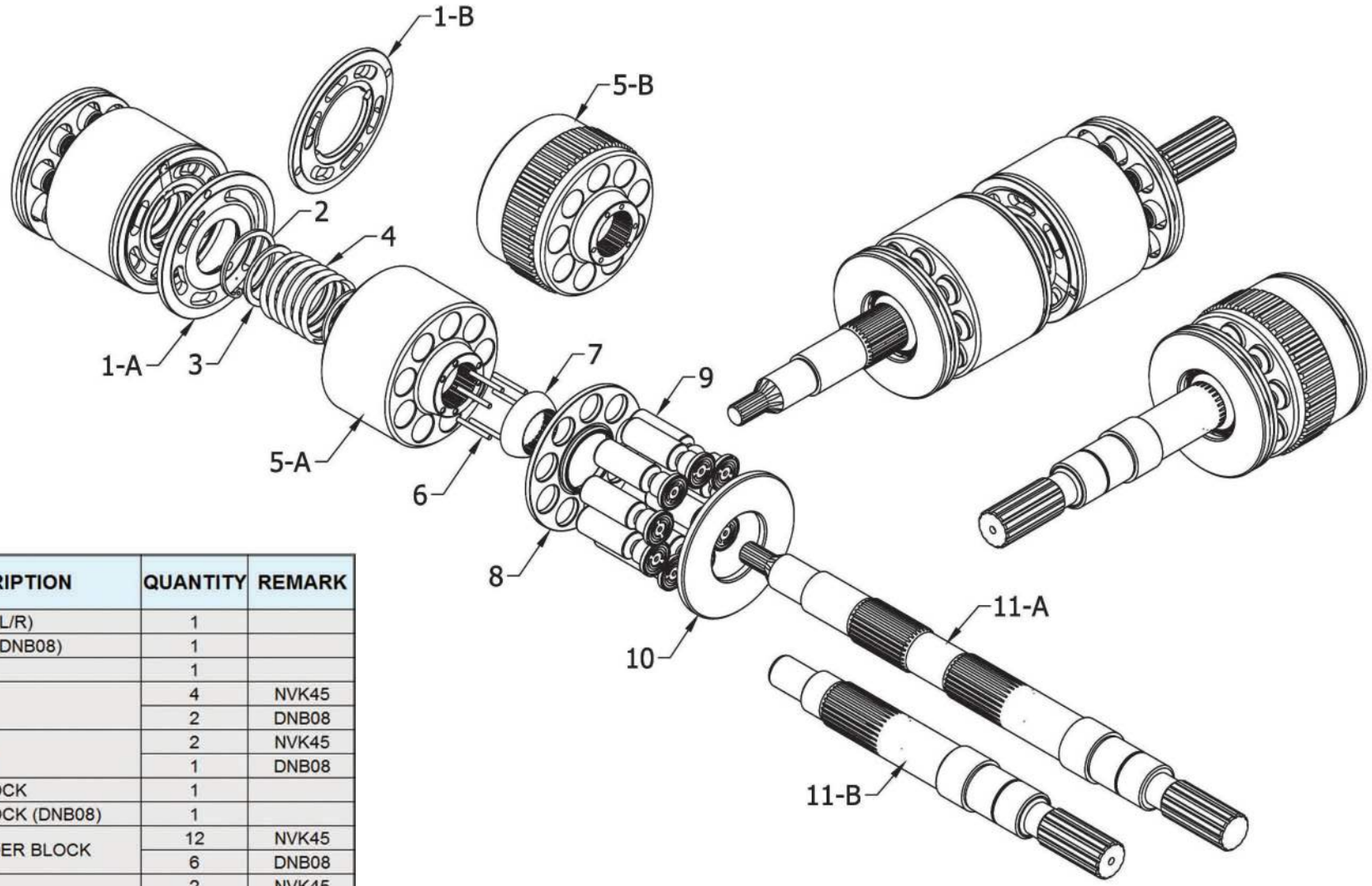

NVK45/DNB08

ITEM	DESCRIPTION	QUANTITY	REMARK
1-A	VALVE PLATE (L/R)	1	
1-B	VALVE PLATE (DNB08)	1	
2	SANP RING	1	
3	SPACE	4	NVK45
		2	DNB08
4	COIL SPRING	2	NVK45
		1	DNB08
5-A	CYLINDER BLOCK	1	
5-B	CYLINDER BLOCK (DNB08)	1	
6	PIN OF CYLINDER BLOCK	12	NVK45
		6	DNB08
7	BALL GUIDE	2	NVK45
		1	DNB08
8	SET PLATE	1	
9	PISTON SHOE	18	NVK45
		9	DNB08
10	SHOE PLATE	2	NVK45
		1	DNB08
11-A	DRIVE SHAFT	1	
11-B	DRIVE SHAFT (DNB08)	1	

HAN DOK HYDRAULIC





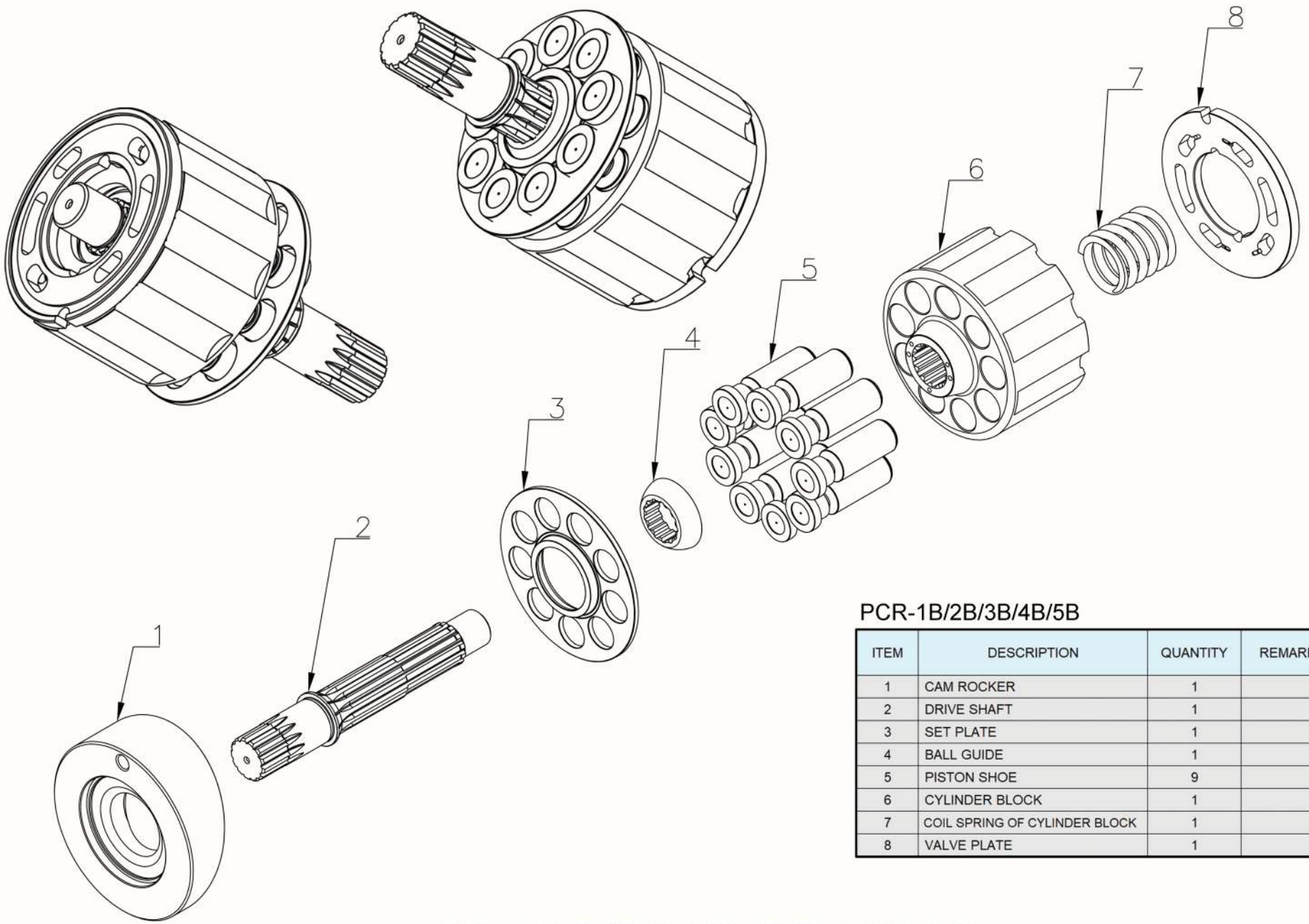

PCR-1B/2B/3B/4B/5B

ITEM	DESCRIPTION	QUANTITY	REMARK
1	CAM ROCKER	1	
2	DRIVE SHAFT	1	
3	SET PLATE	1	
4	BALL GUIDE	1	
5	PISTON SHOE	9	
6	CYLINDER BLOCK	1	
7	COIL SPRING OF CYLINDER BLOCK	1	
8	VALVE PLATE	1	

HAN DOK HYDRAULIC



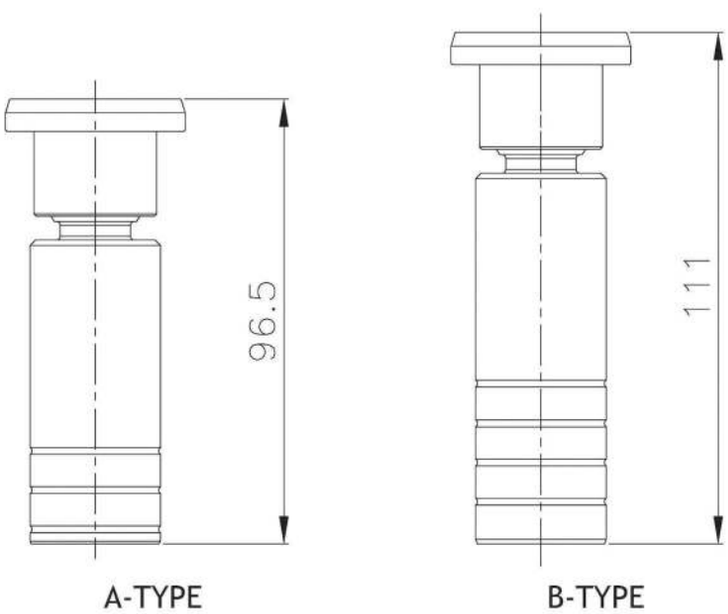

IT IS DIFFERENT PISTON LENGTH

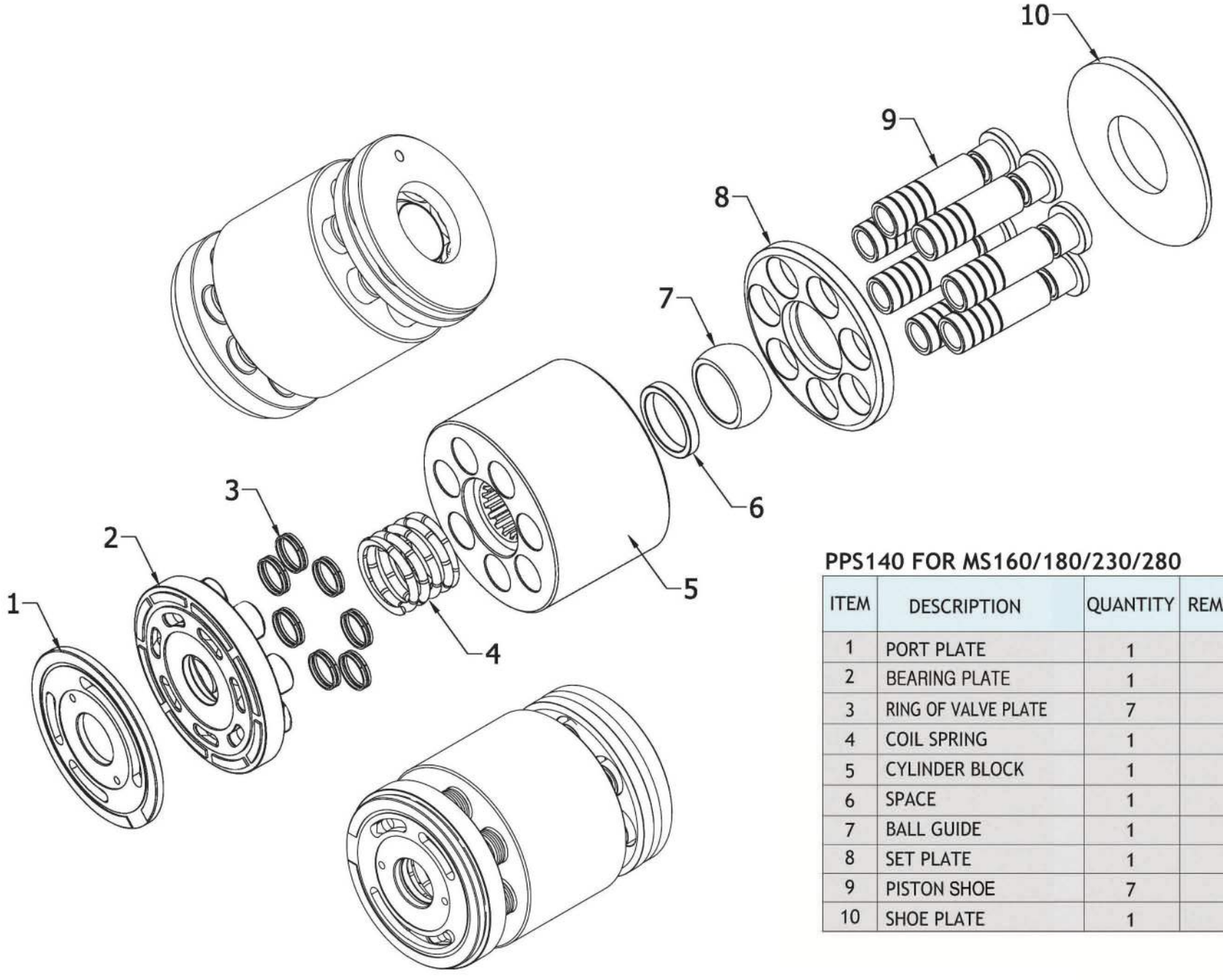

PPS140 FOR MS160/180/230/280

ITEM	DESCRIPTION	QUANTITY	REMARK
1	PORT PLATE	1	
2	BEARING PLATE	1	
3	RING OF VALVE PLATE	7	
4	COIL SPRING	1	
5	CYLINDER BLOCK	1	
6	SPACE	1	
7	BALL GUIDE	1	
8	SET PLATE	1	
9	PISTON SHOE	7	
10	SHOE PLATE	1	

HAN DOK HYDRAULIC

PSV2-55/62/63





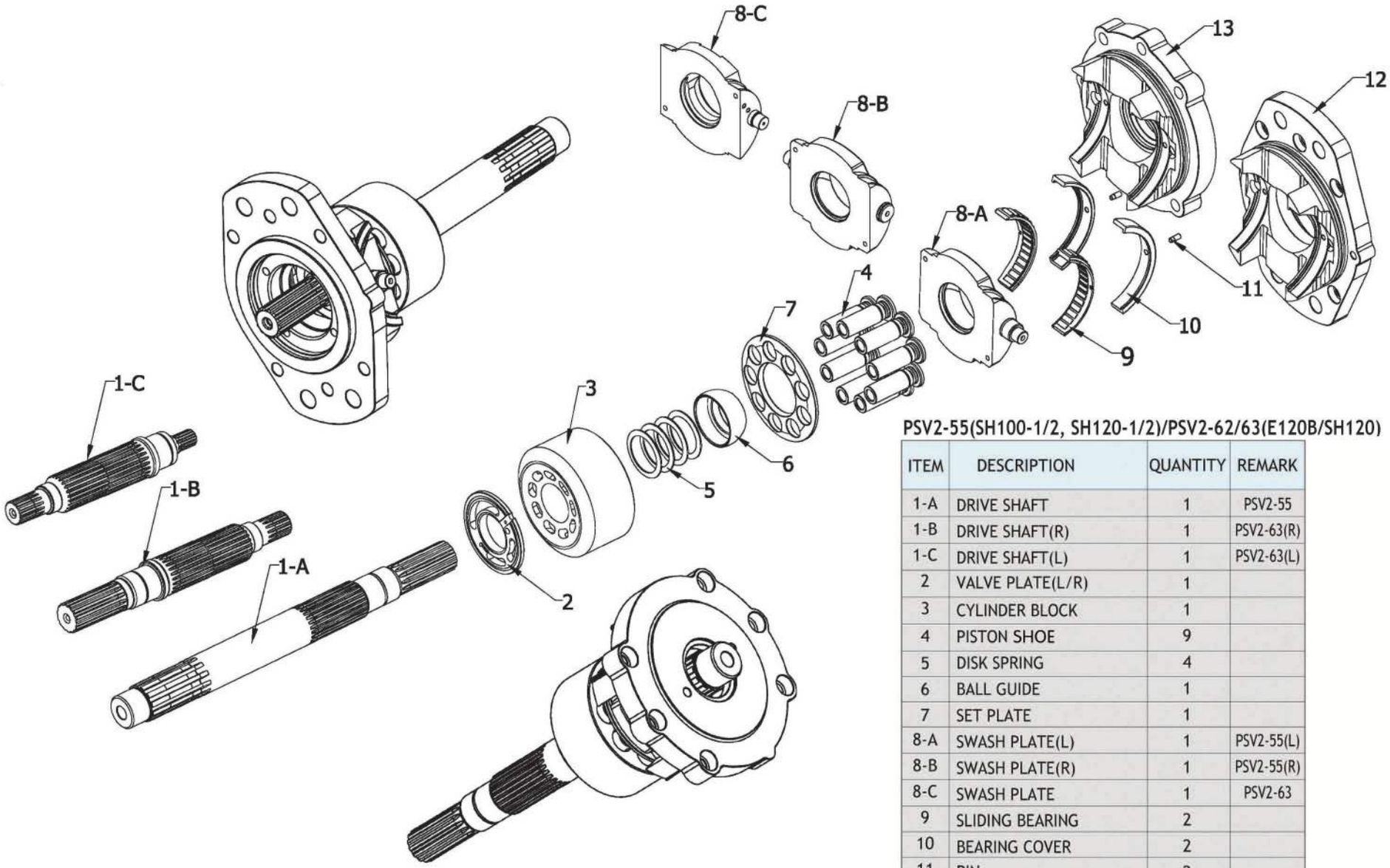

PSV2-55(SH100-1/2, SH120-1/2)/PSV2-62/63(E120B/SH120)

ITEM	DESCRIPTION	QUANTITY	REMARK
1-A	DRIVE SHAFT	1	PSV2-55
1-B	DRIVE SHAFT(R)	1	PSV2-63(R)
1-C	DRIVE SHAFT(L)	1	PSV2-63(L)
2	VALVE PLATE(L/R)	1	
3	CYLINDER BLOCK	1	
4	PISTON SHOE	9	
5	DISK SPRING	4	
6	BALL GUIDE	1	
7	SET PLATE	1	
8-A	SWASH PLATE(L)	1	PSV2-55(L)
8-B	SWASH PLATE(R)	1	PSV2-55(R)
8-C	SWASH PLATE	1	PSV2-63
9	SLIDING BEARING	2	
10	BEARING COVER	2	
11	PIN	2	
12	CRADLE(R)	1	
13	CRADLE(L)	1	

HAN DOK HYDRAULIC

PSVD2 SERIES

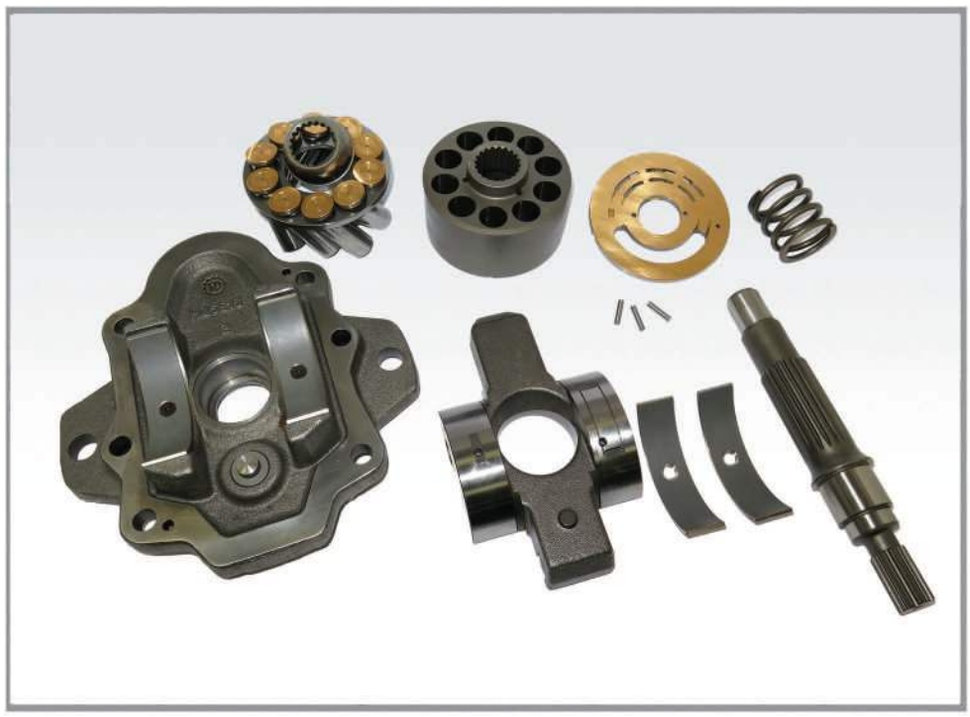

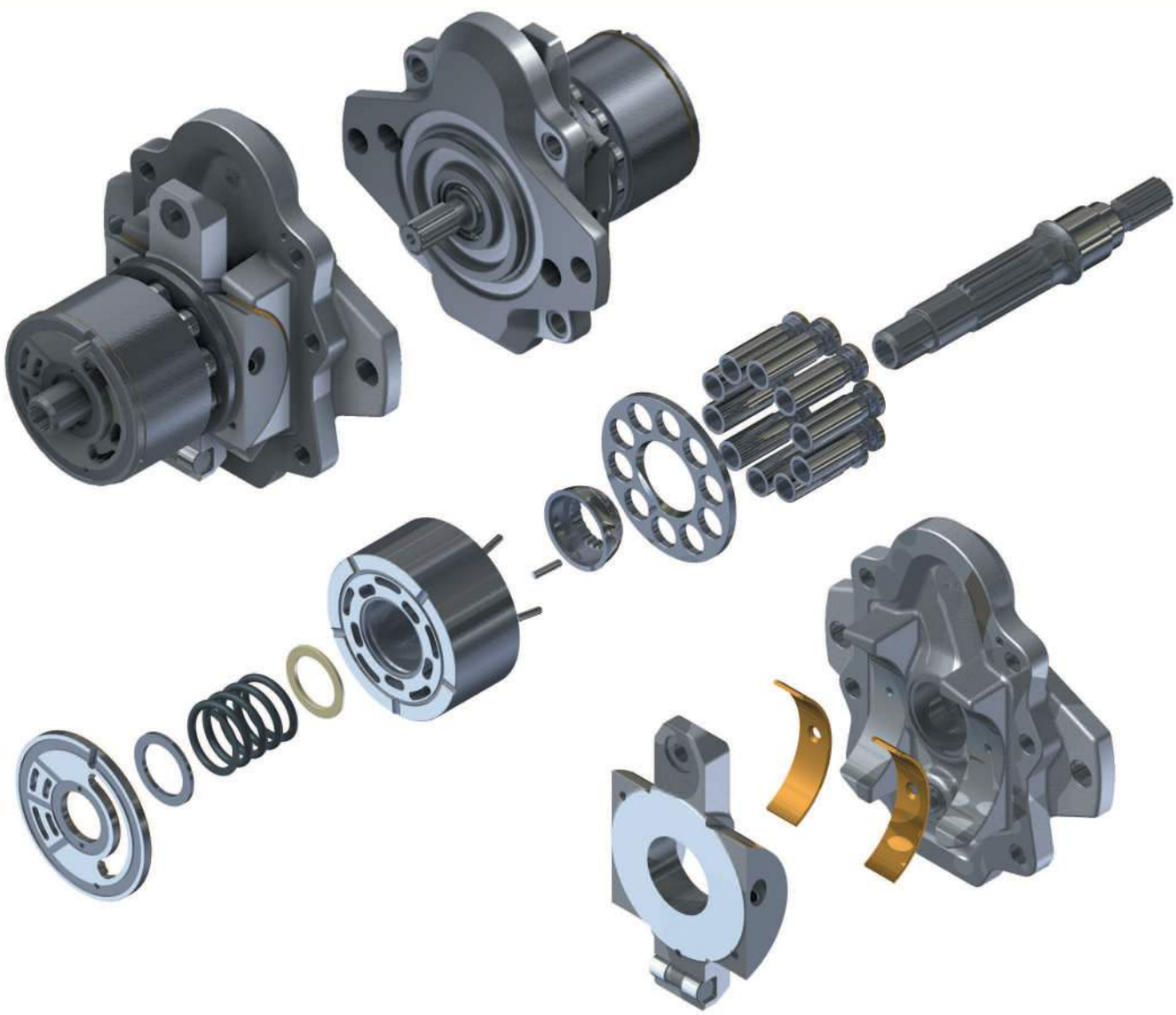

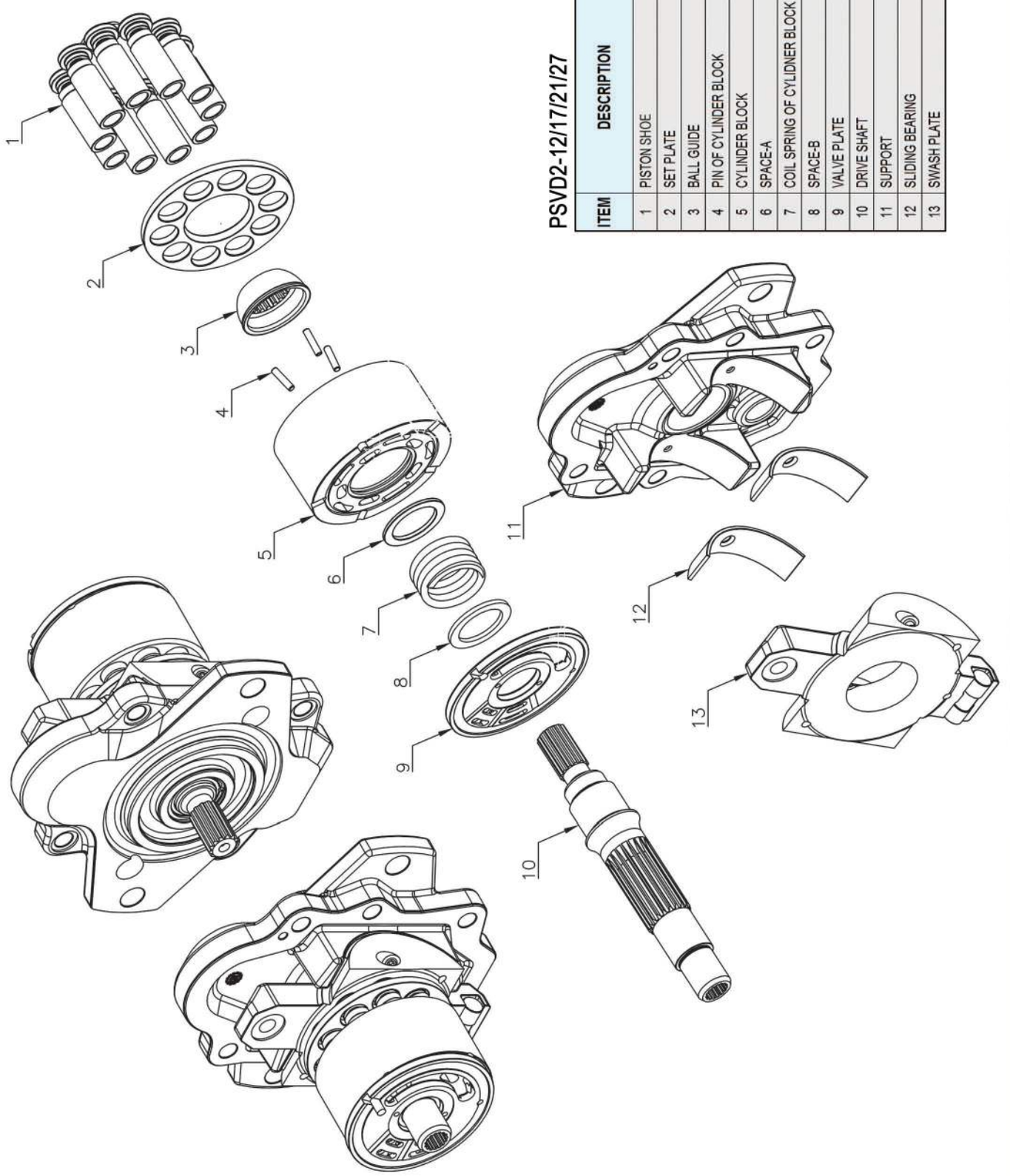

PSVD2-12/17/21/27

ITEM	DESCRIPTION	QUANTITY	REMARK
1	PISTON SHOE	10	
2	SET PLATE	1	
3	BALL GUIDE	1	
4	PIN OF CYLINDER BLOCK	3	
5	CYLINDER BLOCK	1	
6	SPACE-A	1	
7	COIL SPRING OF CYLIDNER BLOCK	1	
8	SPACE-B	1	
9	VALVE PLATE	1	
10	DRIVE SHAFT	1	
11	SUPPORT	1	
12	SLIDING BEARING	2	
13	SWASH PLATE	1	

HAN DOK HYDRAULIC

PSVL SERIES

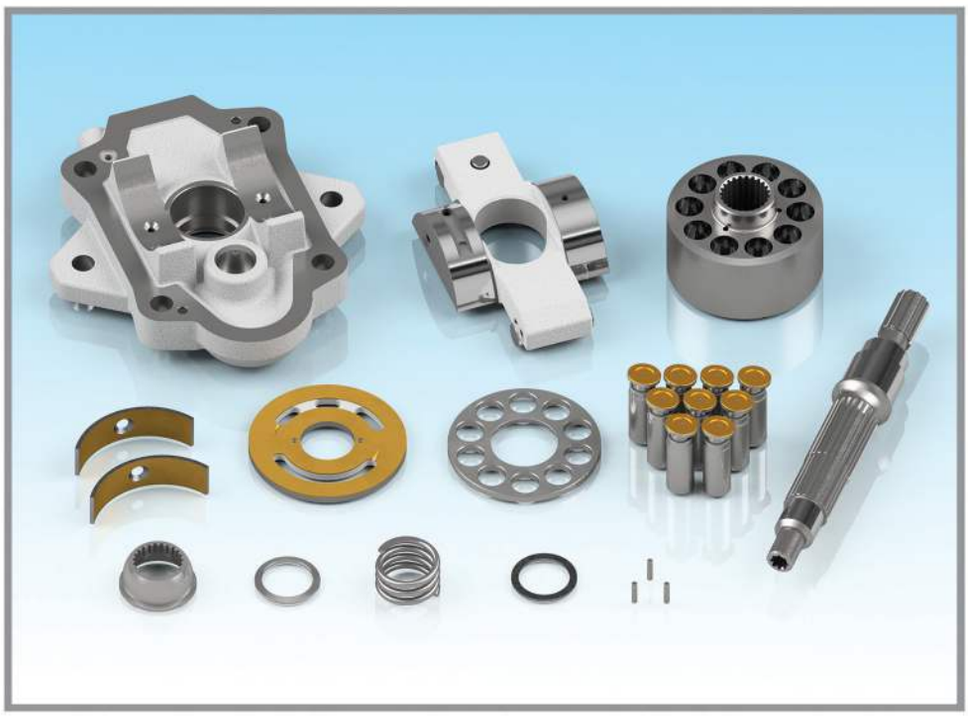

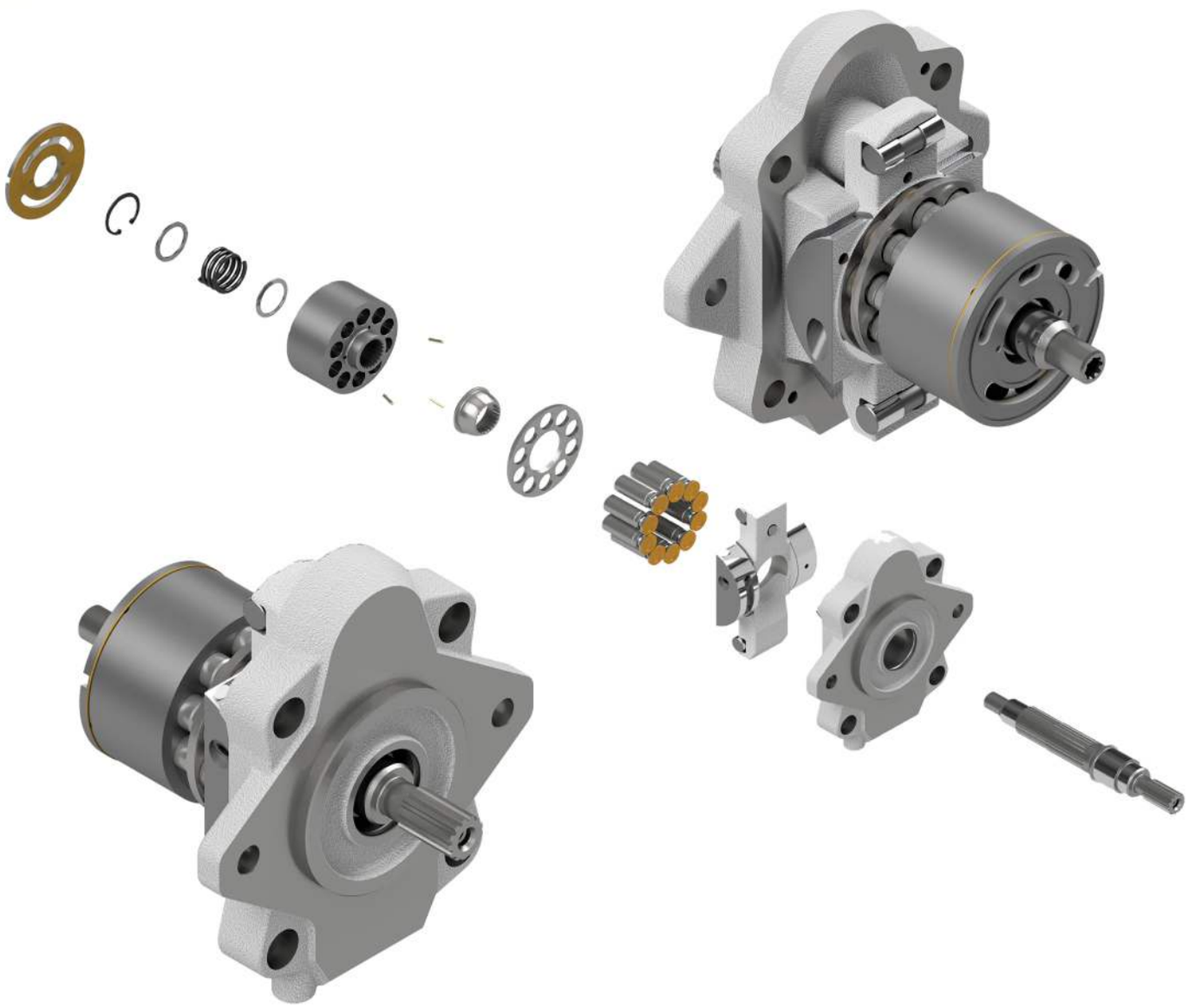

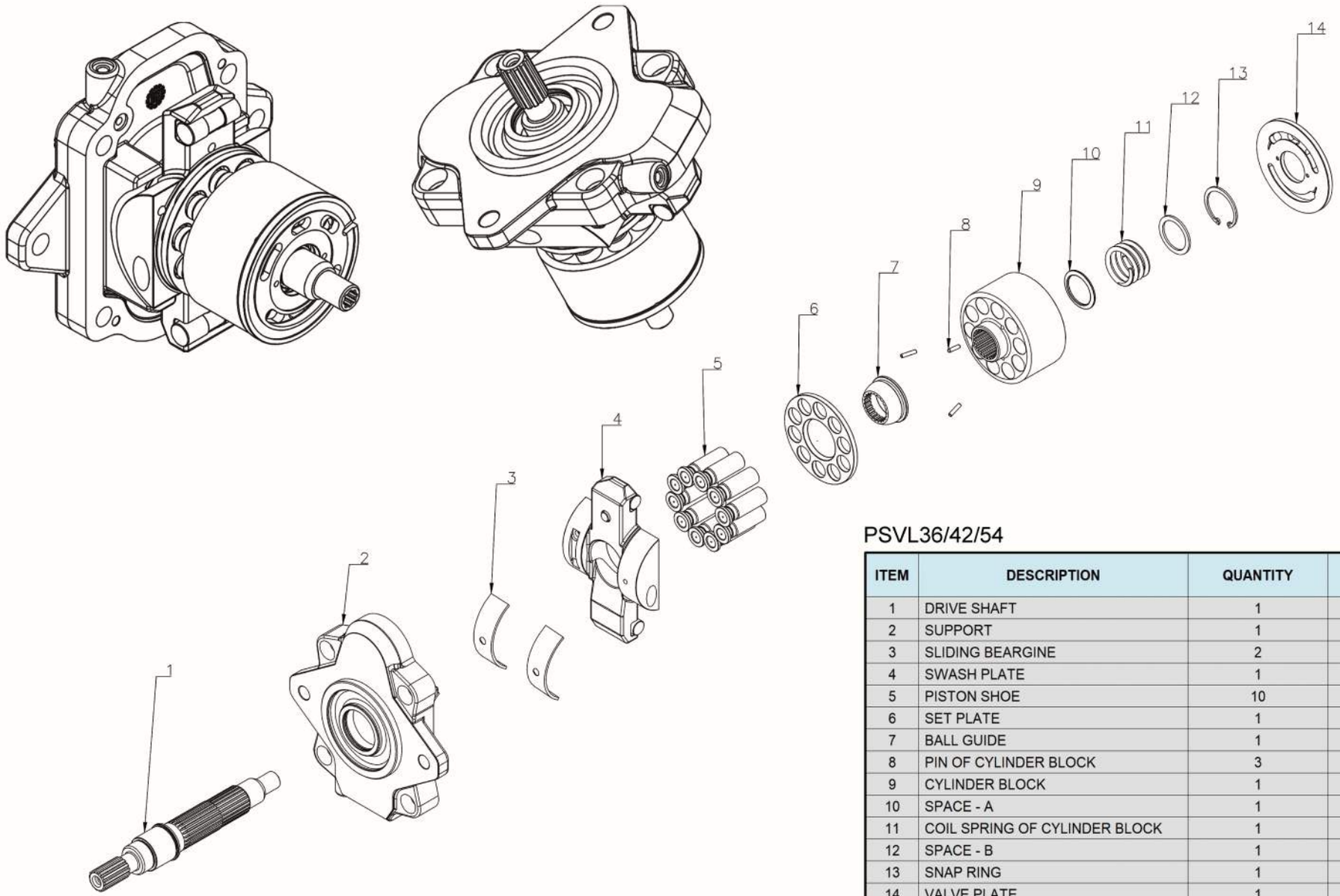

PSVL36/42/54

ITEM	DESCRIPTION	QUANTITY	REMARK
1	DRIVE SHAFT	1	
2	SUPPORT	1	
3	SLIDING BEARGINE	2	
4	SWASH PLATE	1	
5	PISTON SHOE	10	
6	SET PLATE	1	
7	BALL GUIDE	1	
8	PIN OF CYLINDER BLOCK	3	
9	CYLINDER BLOCK	1	
10	SPACE - A	1	
11	COIL SPRING OF CYLINDER BLOCK	1	
12	SPACE - B	1	
13	SNAP RING	1	
14	VALVE PLATE	1	

HAN DOK HYDRAULIC



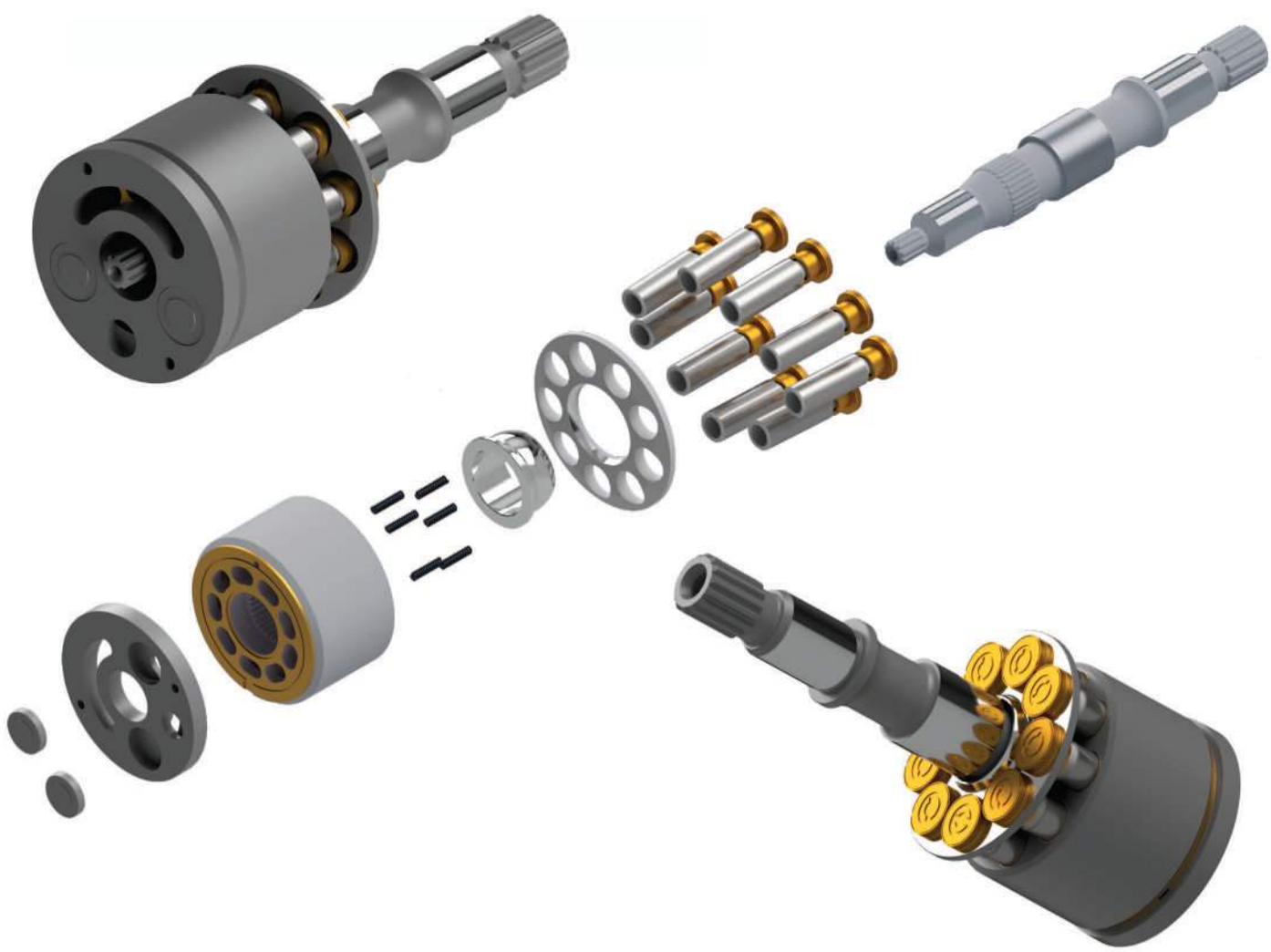

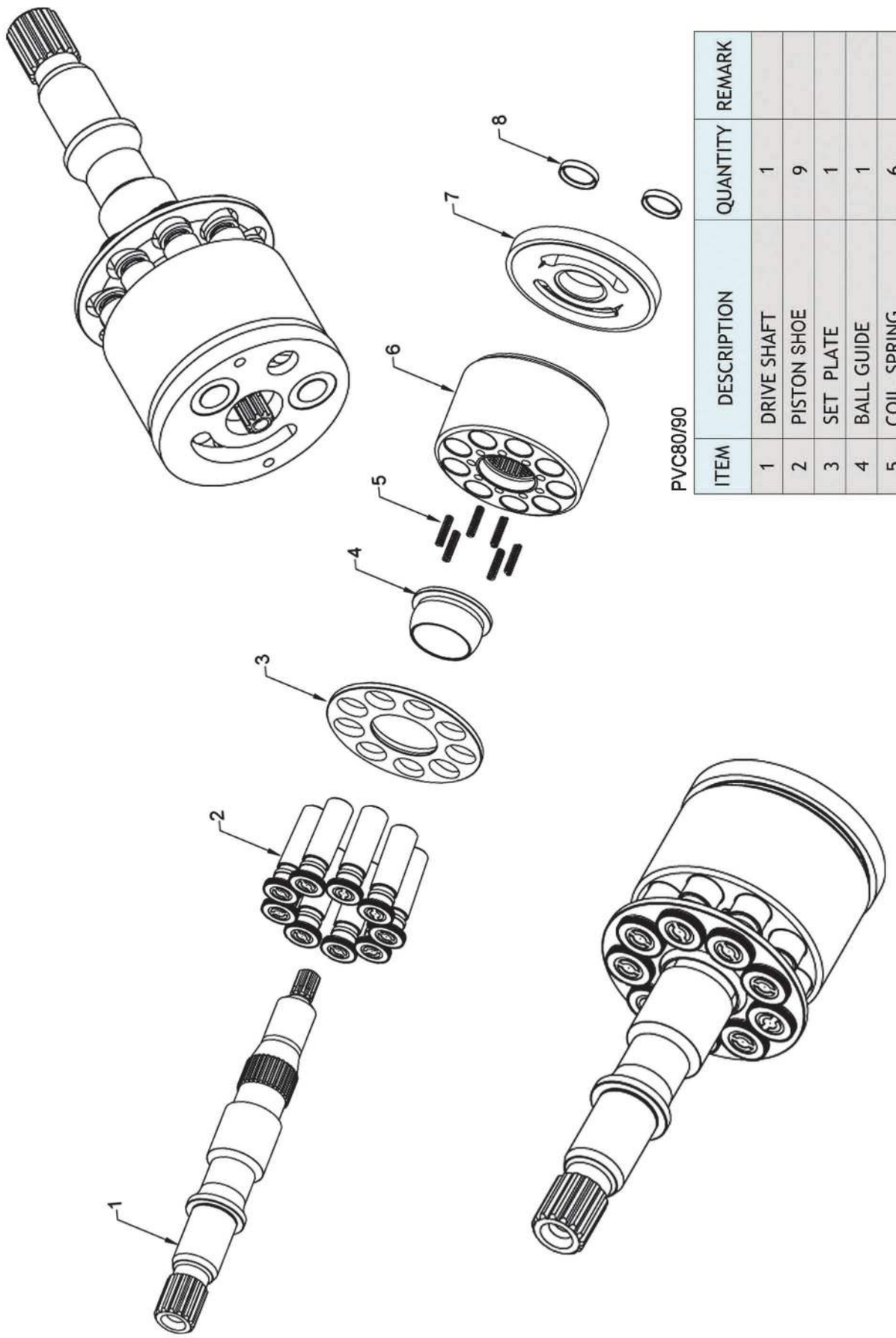

PVC80/90

ITEM	DESCRIPTION	QUANTITY	REMARK
1	DRIVE SHAFT	1	
2	PISTON SHOE	9	
3	SET PLATE	1	
4	BALL GUIDE	1	
5	COIL SPRING	6	
6	CYLINDER BLOCK	1	
7	VALVE PLATE	1	
8	CUSHION PISTON	2	

HANDOK HYDRAULIC



IT IS DIFFERENT SHAPE VALVE PLATE

V NOTCH TYPE		
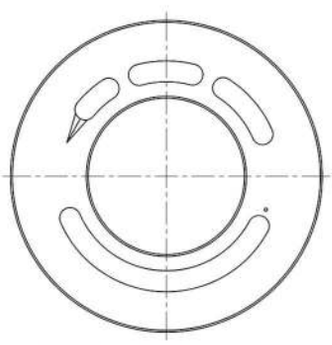	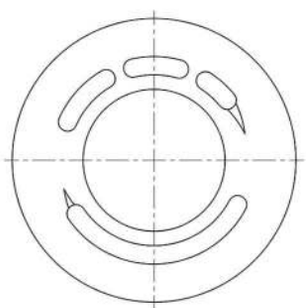	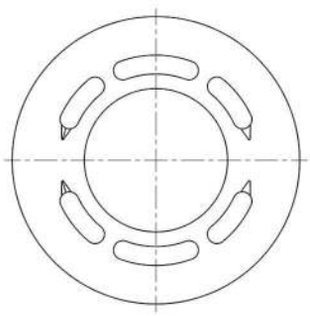
PVD22 (OLD TYPE)	PVD21 / 22 & SPV20 / 21 / 22 / 23 / 24	MF18

PROPEL NOTCH TYPE	
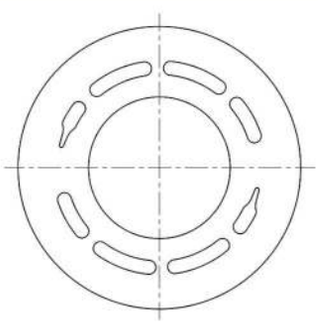	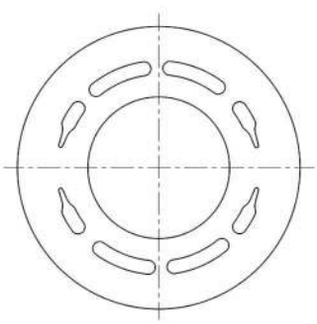
PV20 / 21 / 22 / 23 / 24	MF20 / 21 / 22 / 23 / 24

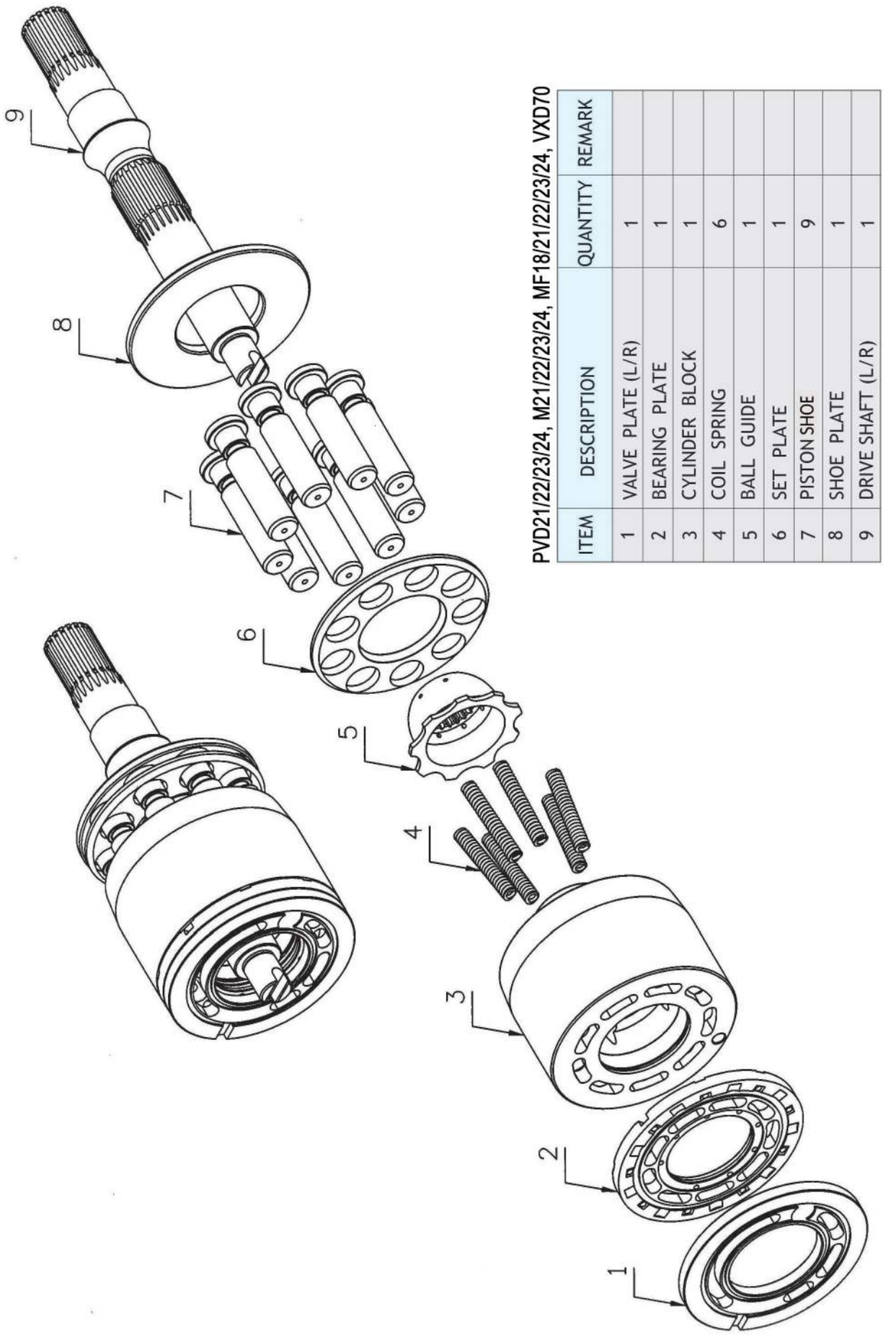

PVD21/22/23/24, M21/22/23/24, MF18/21/22/23/24, VXD70

ITEM	DESCRIPTION	QUANTITY	REMARK
1	VALVE PLATE (L/R)	1	
2	BEARING PLATE	1	
3	CYLINDER BLOCK	1	
4	COIL SPRING	6	
5	BALL GUIDE	1	
6	SET PLATE	1	
7	PISTON SHOE	9	
8	SHOE PLATE	1	
9	DRIVE SHAFT (L/R)	1	

HANDOK HYDRAULIC

PVD-00B/0B/1B/2B/3B





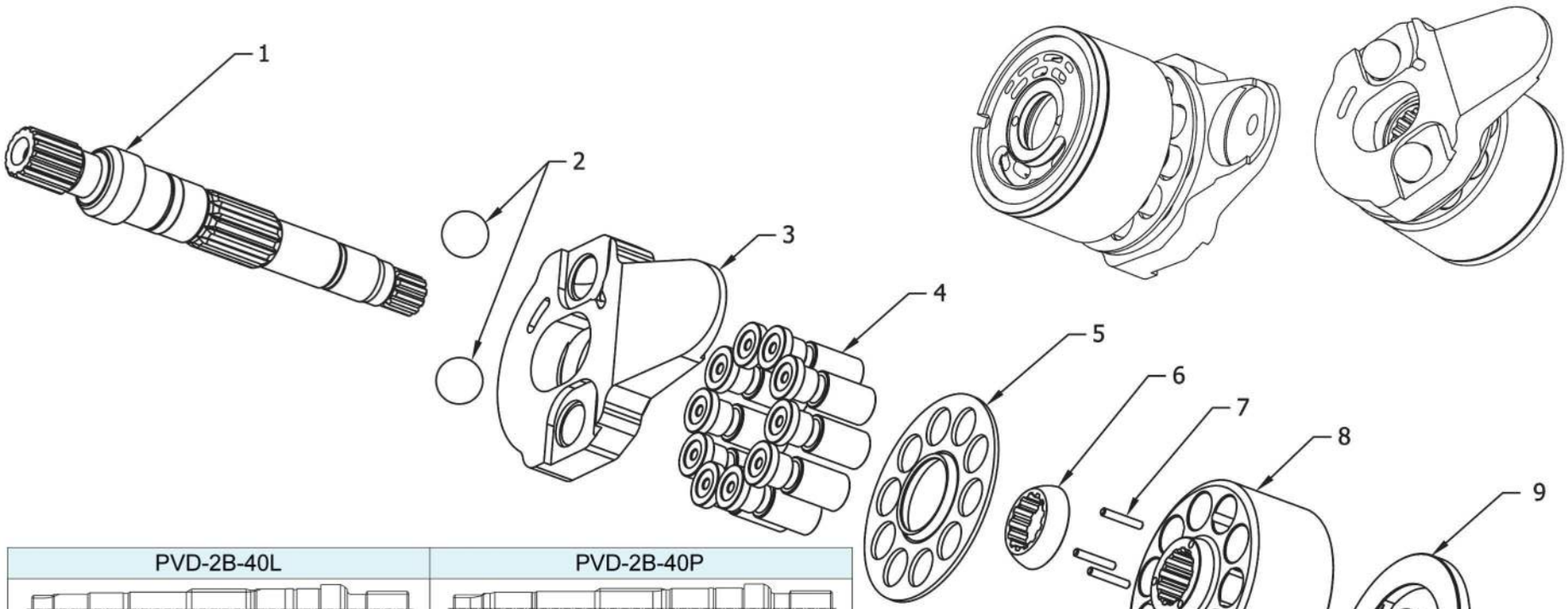

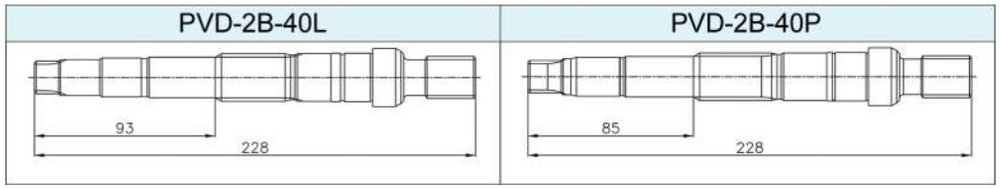

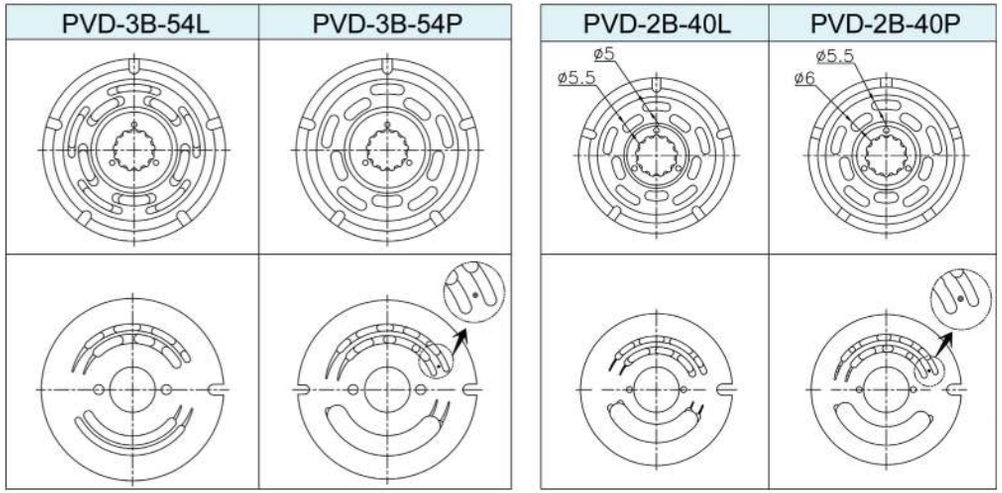

PVD-00B/0B/1B/2B/3B

ITEM	DESCRIPTION	QUANTITY	REMARK
1	DRIVE SHAFT	1	
2	PIVOT BALL OF SWASH PLATE	2	
3	SWASH PLATE	1	
4	PISTON SHOE	10	
5	SET PLATE	1	
6	BALL GUIDE	1	
7	PIN OF CYLINDER BLOCK	3	
8	CYLINDER BLOCK	1	
9	VALVE PLATE	1	

HAN DOK HYDRAULIC



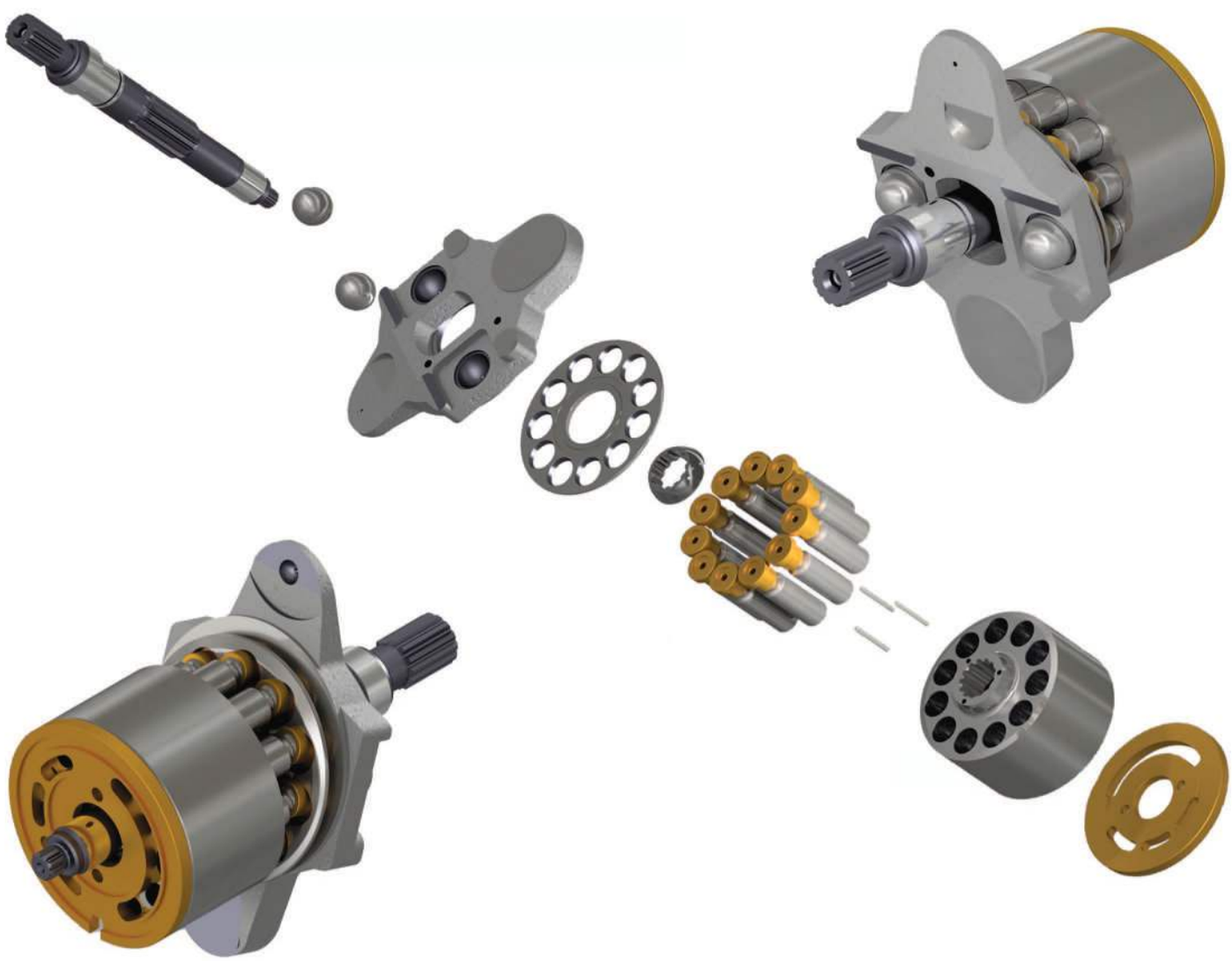

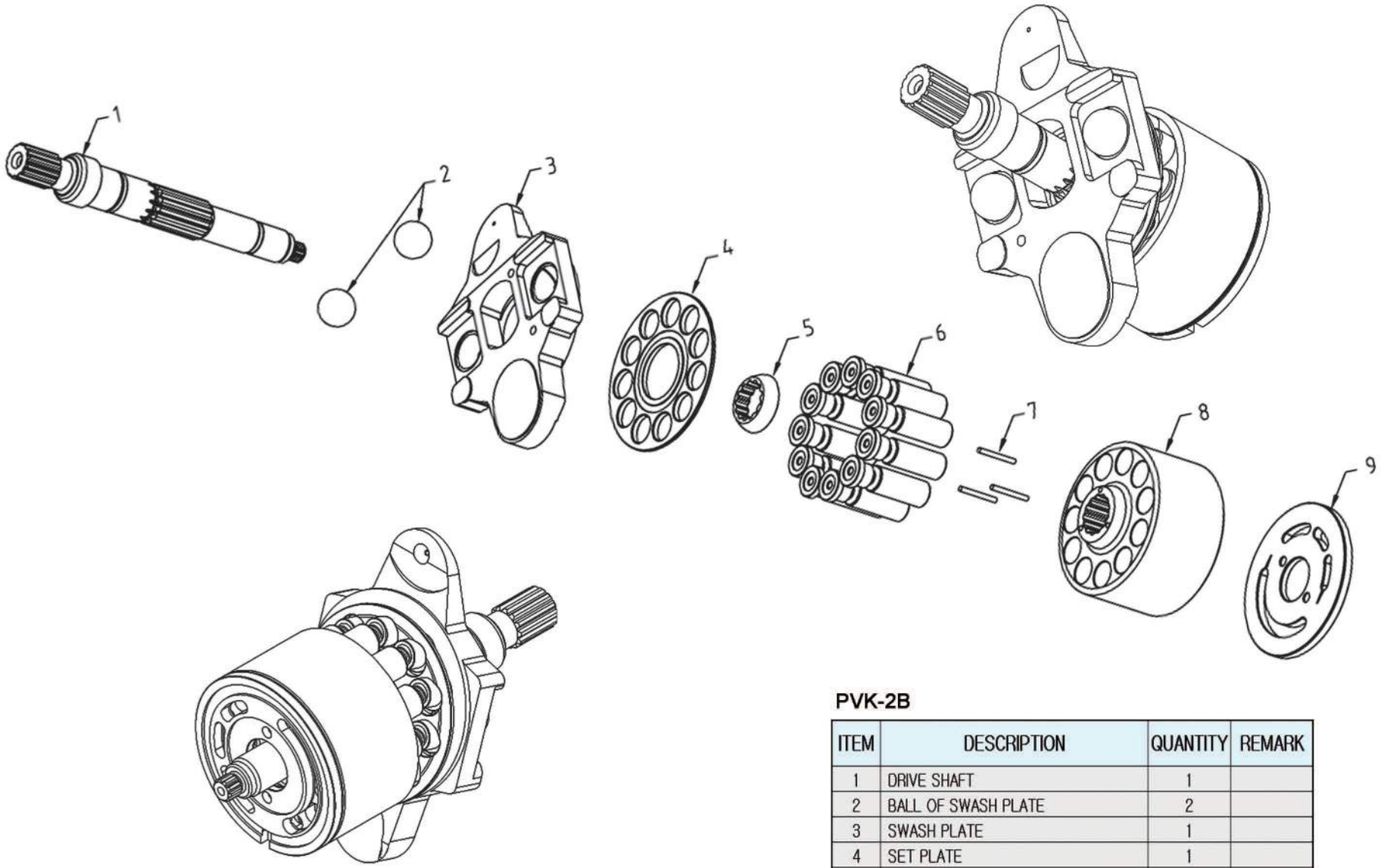

PVK-2B

ITEM	DESCRIPTION	QUANTITY	REMARK
1	DRIVE SHAFT	1	
2	BALL OF SWASH PLATE	2	
3	SWASH PLATE	1	
4	SET PLATE	1	
5	BALL GUIDE	1	
6	PISTON SHOE	11	
7	PIN OF CYLINDER BLOCK	3	
8	CYLINDER BLOCK	1	
9	VALVE PLATE	1	

HAN DOK HYDRAULIC



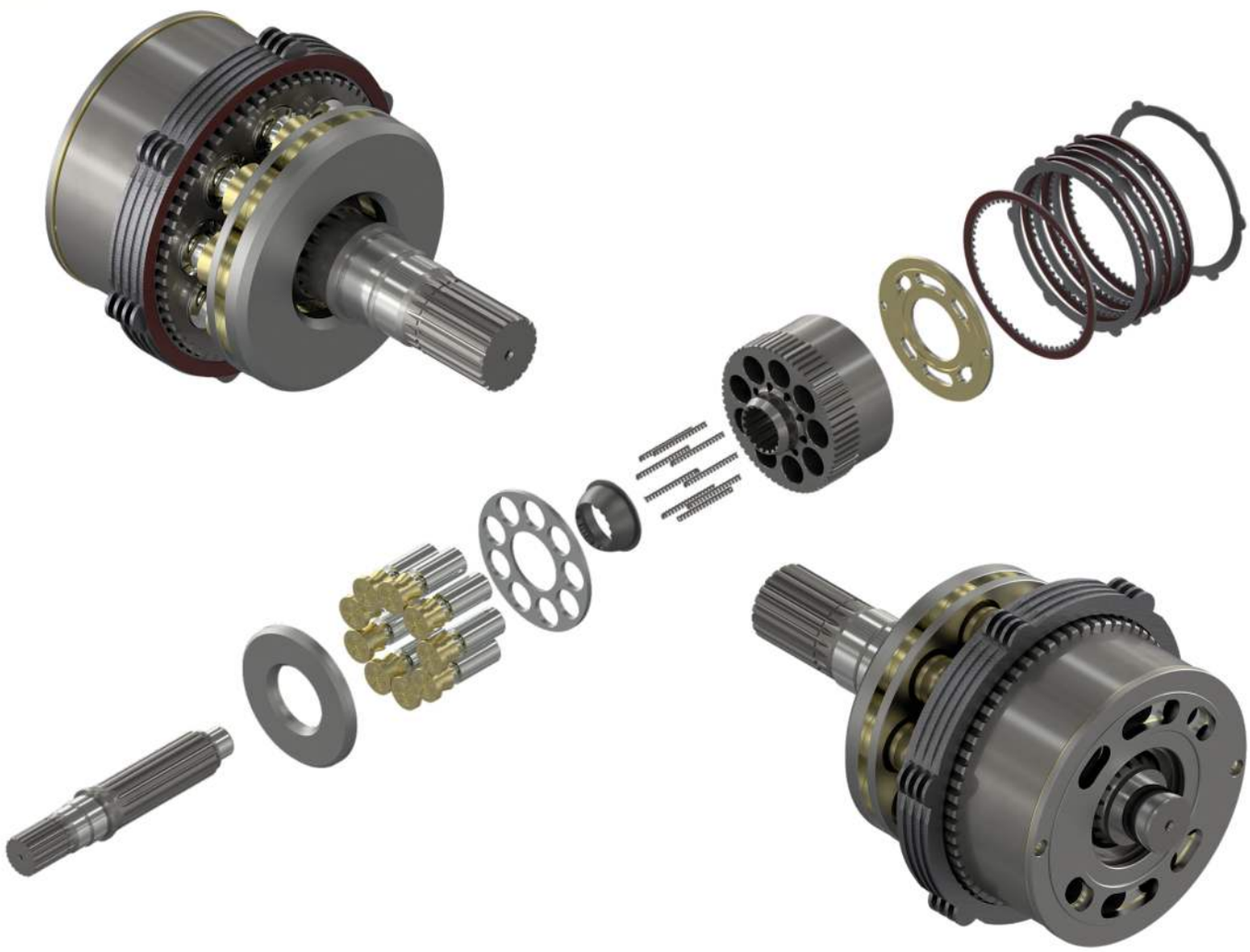

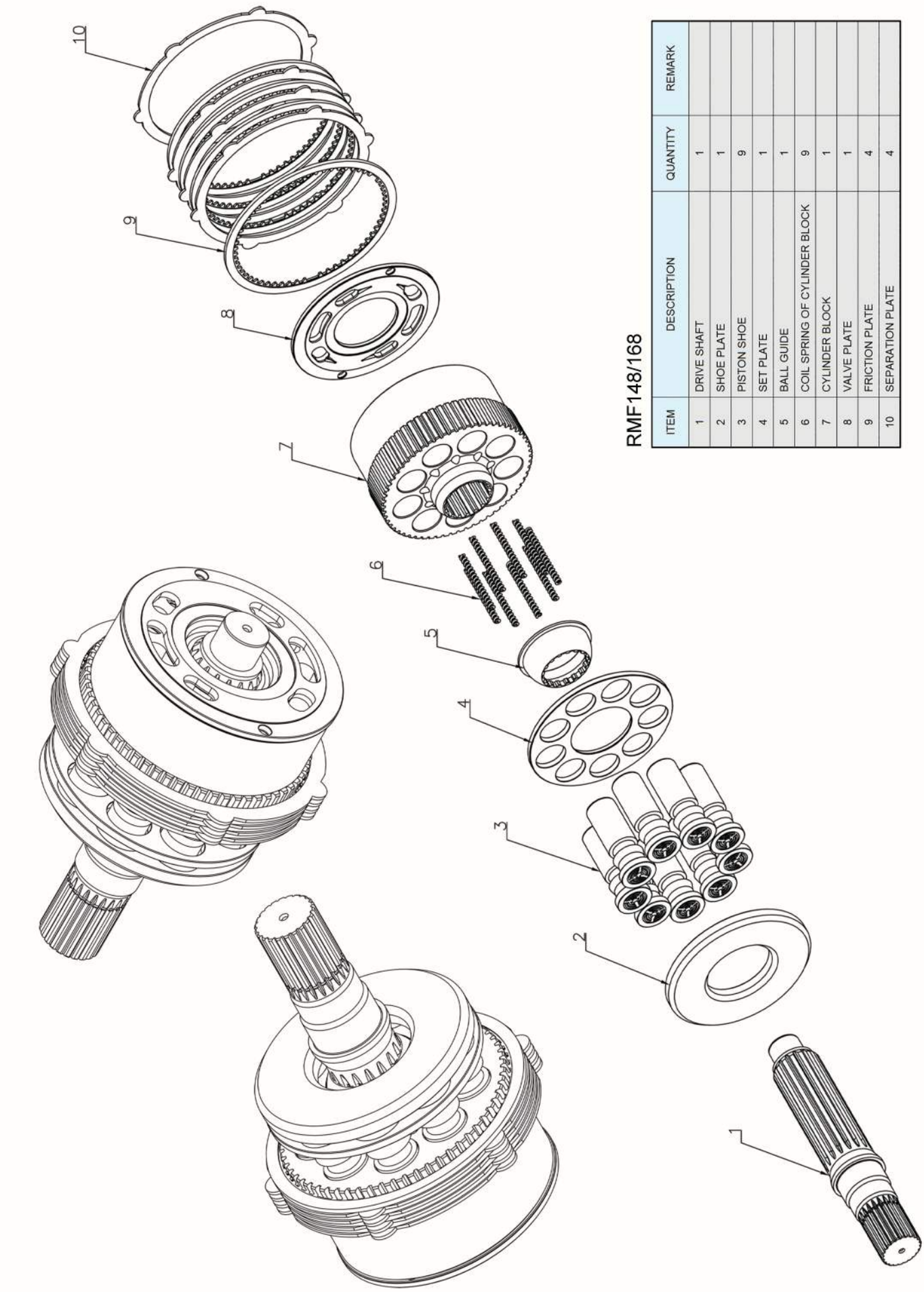

RMF148/168

ITEM	DESCRIPTION	QUANTITY	REMARK
1	DRIVE SHAFT	1	
2	SHOE PLATE	1	
3	PISTON SHOE	9	
4	SET PLATE	1	
5	BALL GUIDE	1	
6	COIL SPRING OF CYLINDER BLOCK	9	
7	CYLINDER BLOCK	1	
8	VALVE PLATE	1	
9	FRICTION PLATE	4	
10	SEPARATION PLATE	4	

HAN DOK HYDRAULIC

SBS SERIES



IT IS DIFFERENT SHAPE BETWEEN B/C SERIES AND E SERIES

SBS80-L (B/C/D SERIES)

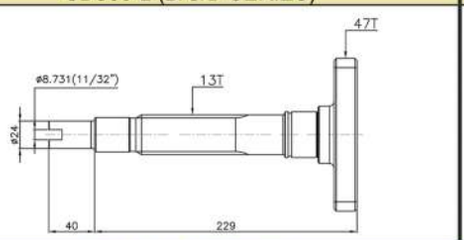

SBS80-R (B/C/D SERIES)

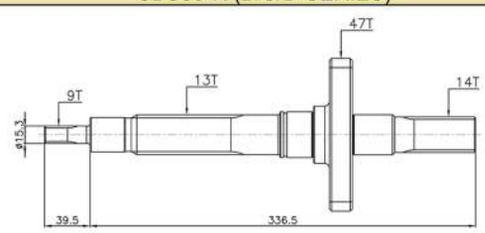

SBS80-L (E SERIES)

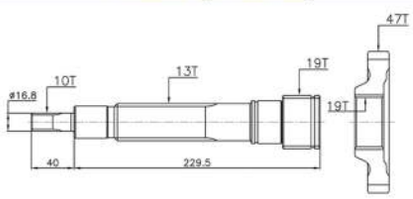

SBS80-R (E SERIES)

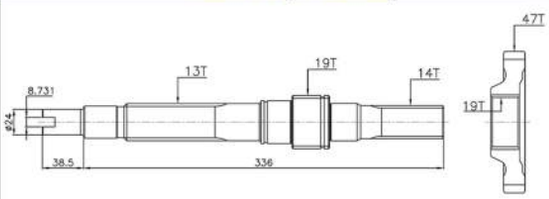

SBS120-L (E SERIES)

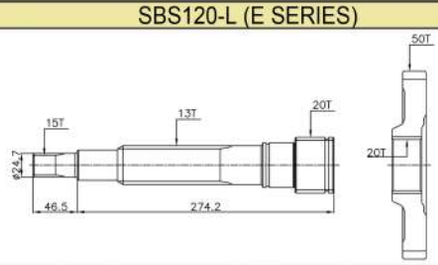

SBS120-R (E SERIES)

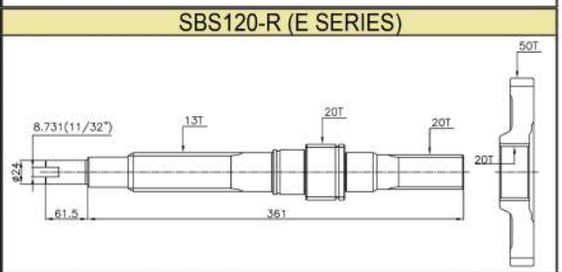

IT IS DIFFERENT SHAPE BETWEEN D/SHAFT(L-11T) AND D/SHAFT(L-15T)

SBS120/140-L (11T)

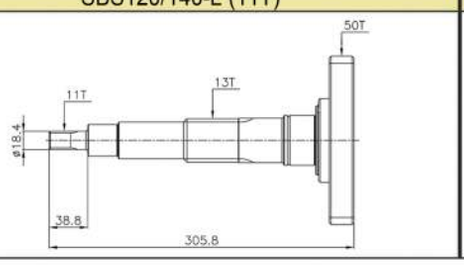

SBS120/140-L (15T)

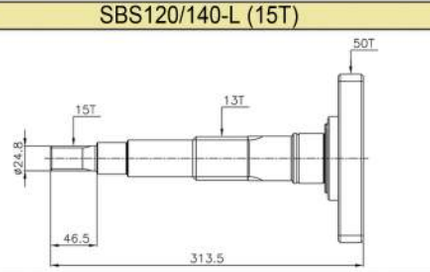

IT IS DIFFERENT SHAPE BETWEEN KEY TYPE AND SPLINE TYPE

SBS120/140-R (KEY TYPE)

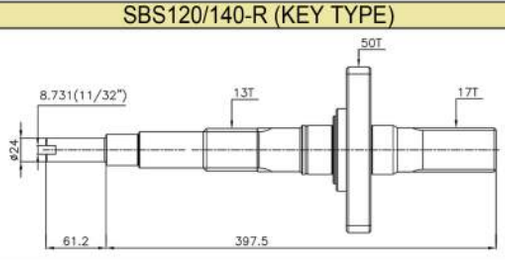

SBS120/140-R (SPLINE TYPE)

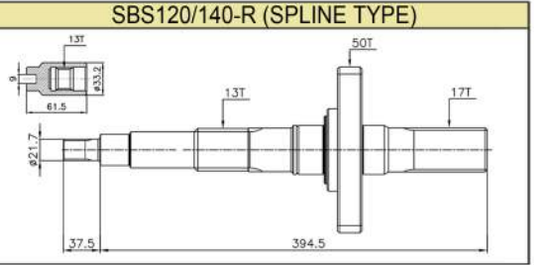

IT IS DIFFERENT SLIDING BEARING

SBS80	
B/C SERIES	D/E SERIES
	

IT IS DIFFERENT SWASH PLATE

SBS80	
B/C SERIES	D/E SERIES
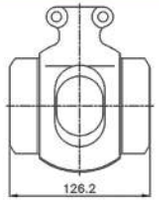	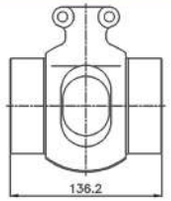

IT IS DIFFERENT SHAPE BEARING PLATE OF SWASH PLATE

SBS120(C/D SERIES)	SBS140(C/D SERIES)
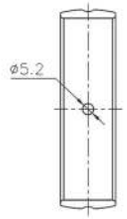	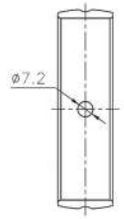

SBS80 FOR 311B/C, 312B/C, 313B/C, 314B/C, 315B/C
SBS80 FOR 311D/E, 312D/E, 313D/E, 314D/E, 315D/E
SBS120/140 FOR 320C/D, 325C/D
SBS120/140 FOR 320E, 329E
SBS180 FOR 336E/F

ITEM	DESCRIPTION	QUANTITY	REMARK
1-A	DRIVE SHAFT (R)	1	KEY TYPE
1-B	DRIVE SHAFT (L)	1	10T
1-C	DRIVE SHAFT (L)	1	11T
1-D	DRIVE SHAFT (L)	1	15T
1-E	DRIVE SHAFT (R)	1	17T
2	SLIDING BEARING OF SUPPORT	1	
3	SLIDING BEARING OF SWASH PALTE	1	
4	SWASH PLATE	1	
5	TILTING PIN	1	
6	SHOE PLATE	1	
7	PISTON	9	
8	SET PLATE	1	
9	BALL GUIDE	1	
10	SPACE	1	
11	COIL SPRING	9	
12	CYLINDER BLOCK	1	
13	VALVE PLATE (SBS120)	1	
14	VALVE PLATE (SBS140)	1	
15	PIN OF SWASH PLATE	2	
16	PIN OF SHOE PLATE	1	
17	COUPLING	1	
18	IDLE GEAR OF DRIVE SHAFT-L&R	1	

HAN DOK HYDRAULIC



IT IS DIFFERENT VALVE PLATE (SG08) OF BACK FACE

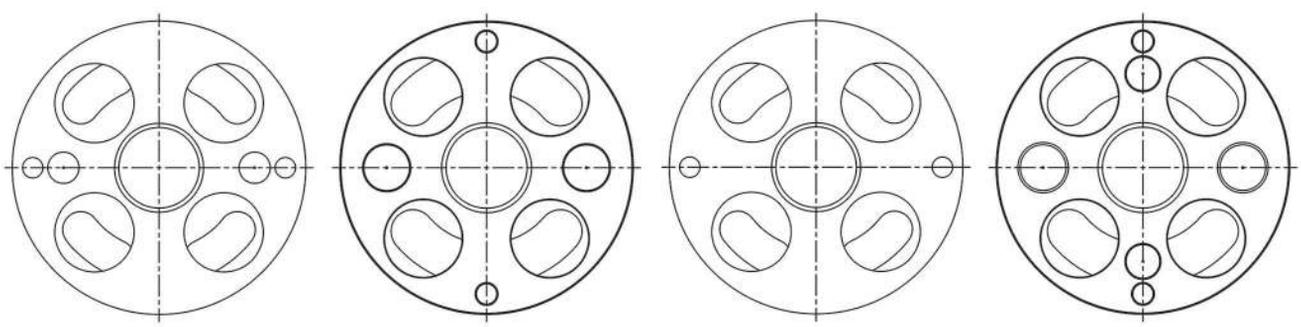

IT IS DIFFERENT VALVE PLATE (SG02) C-TYPE AND N-TYPE

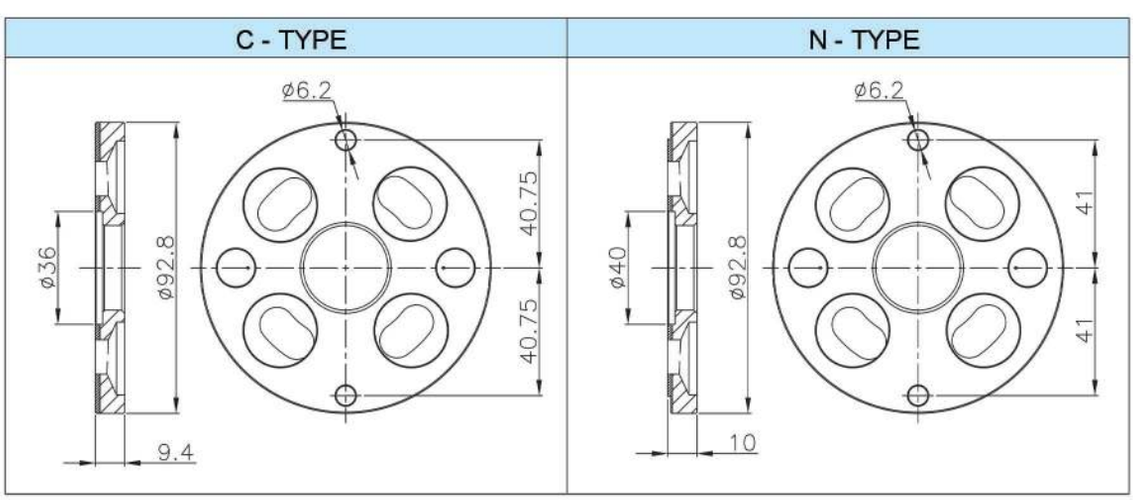

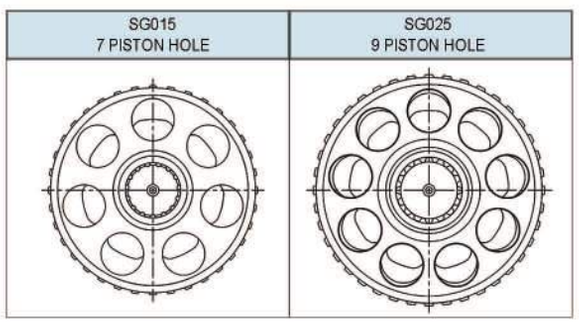

SG015/025/03/04/08/15/20
MFB80/150/160/170/180/190/200/250

ITEM	DESCRIPTION	QUANTITY	REMARK
1	SHOE PLATE	1	
2	PISTON SHOE	9	
3	SET PLATE	1	
4	SPRING OF SET PLATE	1	
5	CYLINDER BLOCK	1	
6-A	VALVE PLATE(NORMAL TYPE)	1	
6-B	VALVE PLATE(4-HOLE TYPE)	1	
6-C	VALVE PLATE(2-HOLE TYPE)	1	Φ13
6-D	VALVE PLATE(2-HOLE TYPE)	1	Φ19
7	SEPARATION PLATE	3	
8	FRICTION PLATE	2	

HAN DOK HYDRAULIC



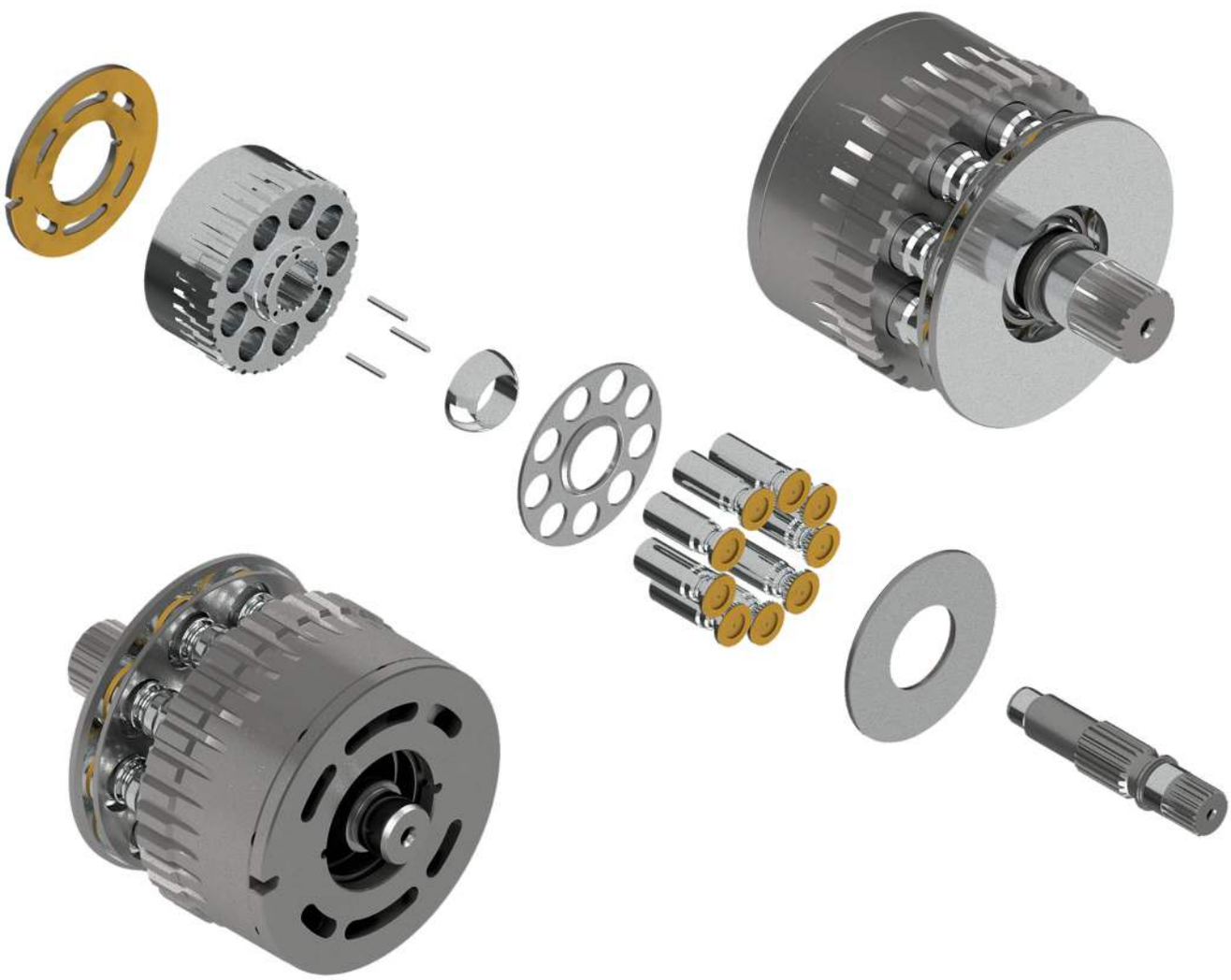

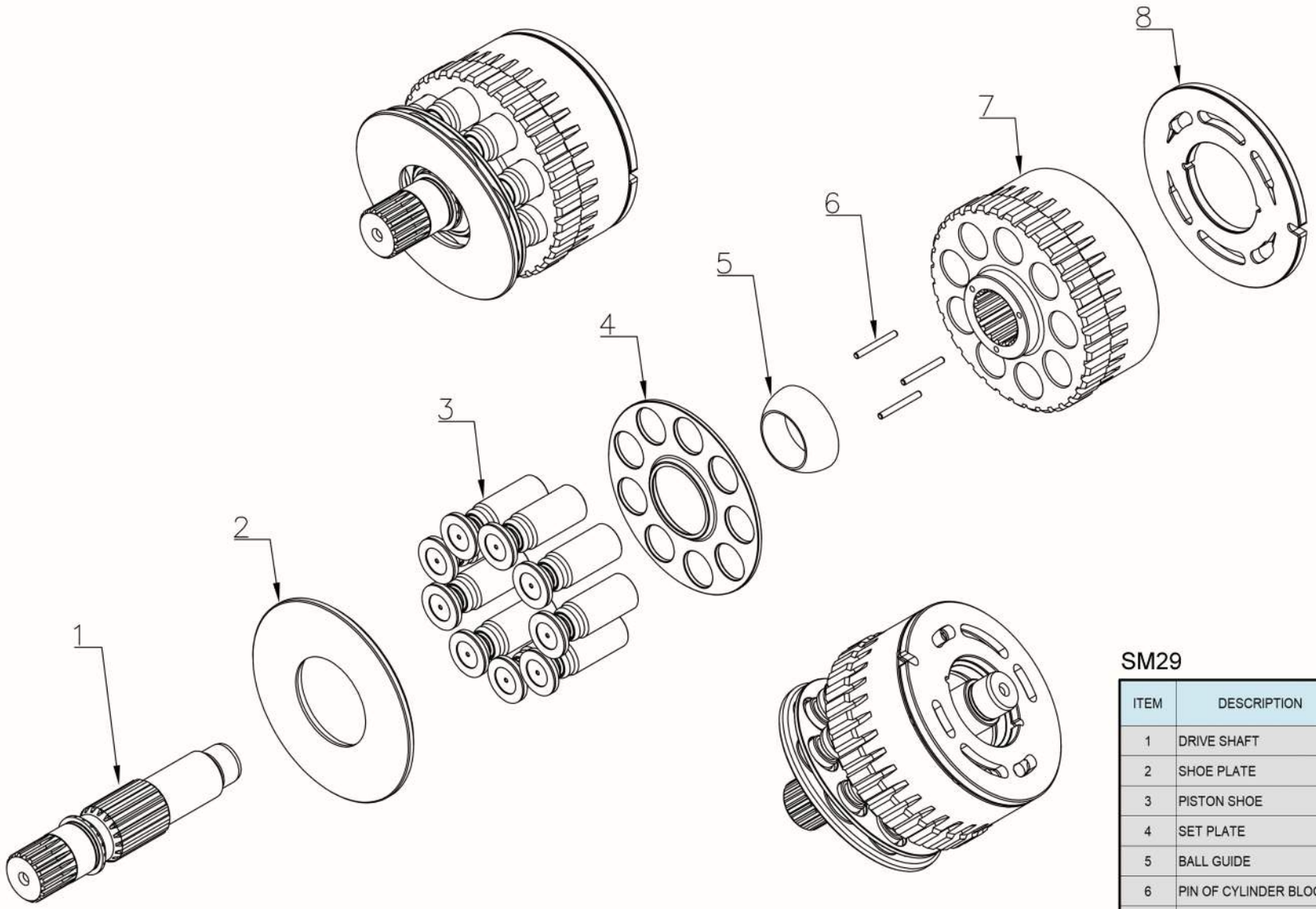

SM29

ITEM	DESCRIPTION	QUANTITY	REMARK
1	DRIVE SHAFT	1	
2	SHOE PLATE	1	
3	PISTON SHOE	9	
4	SET PLATE	1	
5	BALL GUIDE	1	
6	PIN OF CYLINDER BLOCK	3	
7	CYLINDER BLOCK	1	
8	VALVE PLATE	1	

HAN DOK HYDRAULIC

SPK10/10, SPV10/10



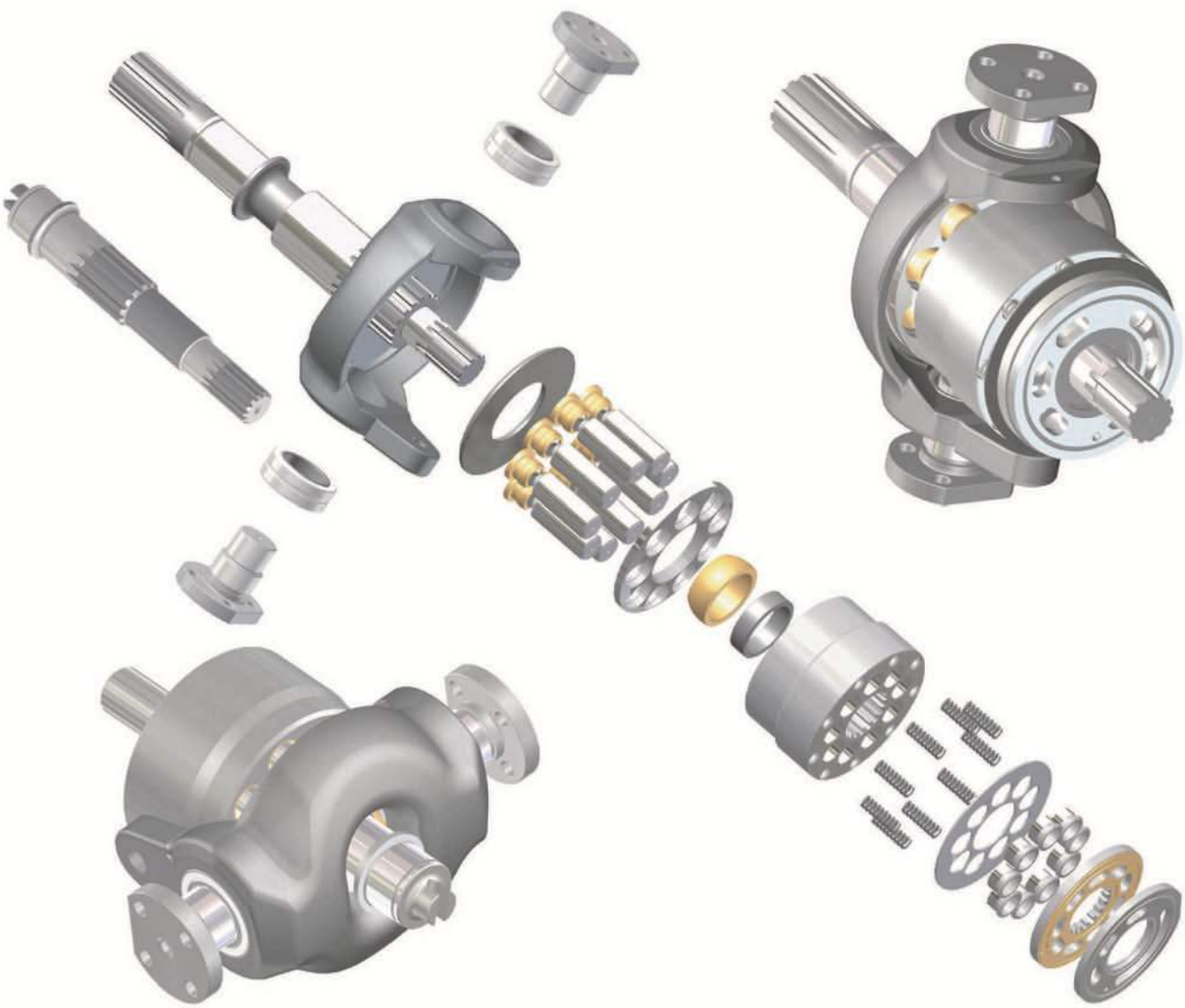

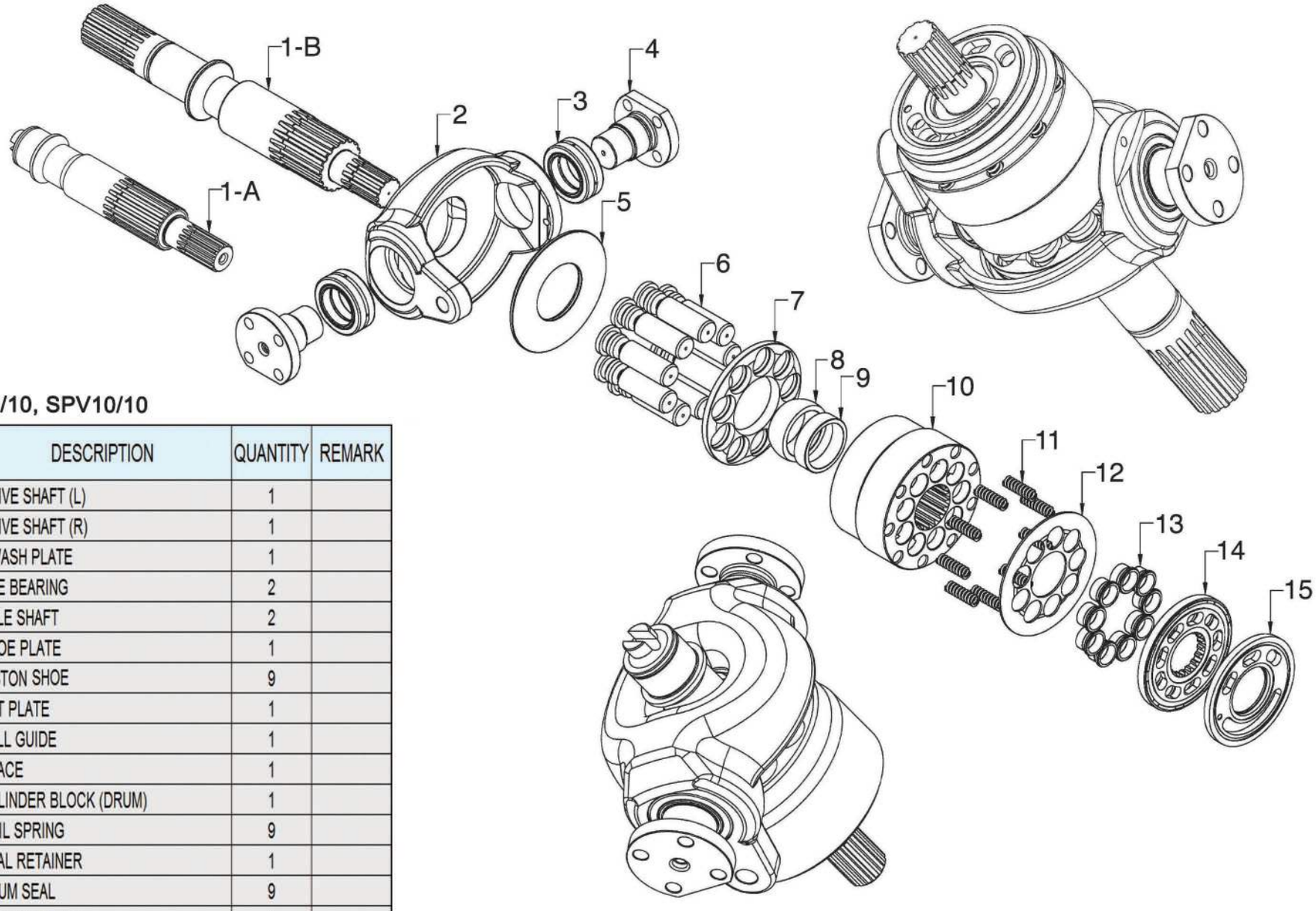

SPK10/10, SPV10/10

ITEM	DESCRIPTION	QUANTITY	REMARK
1-A	DRIVE SHAFT (L)	1	
1-B	DRIVE SHAFT (R)	1	
2	SWASH PLATE	1	
3	EYE BEARING	2	
4	AXLE SHAFT	2	
5	SHOE PLATE	1	
6	PISTON SHOE	9	
7	SET PLATE	1	
8	BALL GUIDE	1	
9	SPACE	1	
10	CYLINDER BLOCK (DRUM)	1	
11	COIL SPRING	9	
12	SEAL RETAINER	1	
13	DRUM SEAL	9	
14	BEARING PLATE	1	
15	PORT PLATE (L/R)	1	

HAN DOK HYDRAULIC



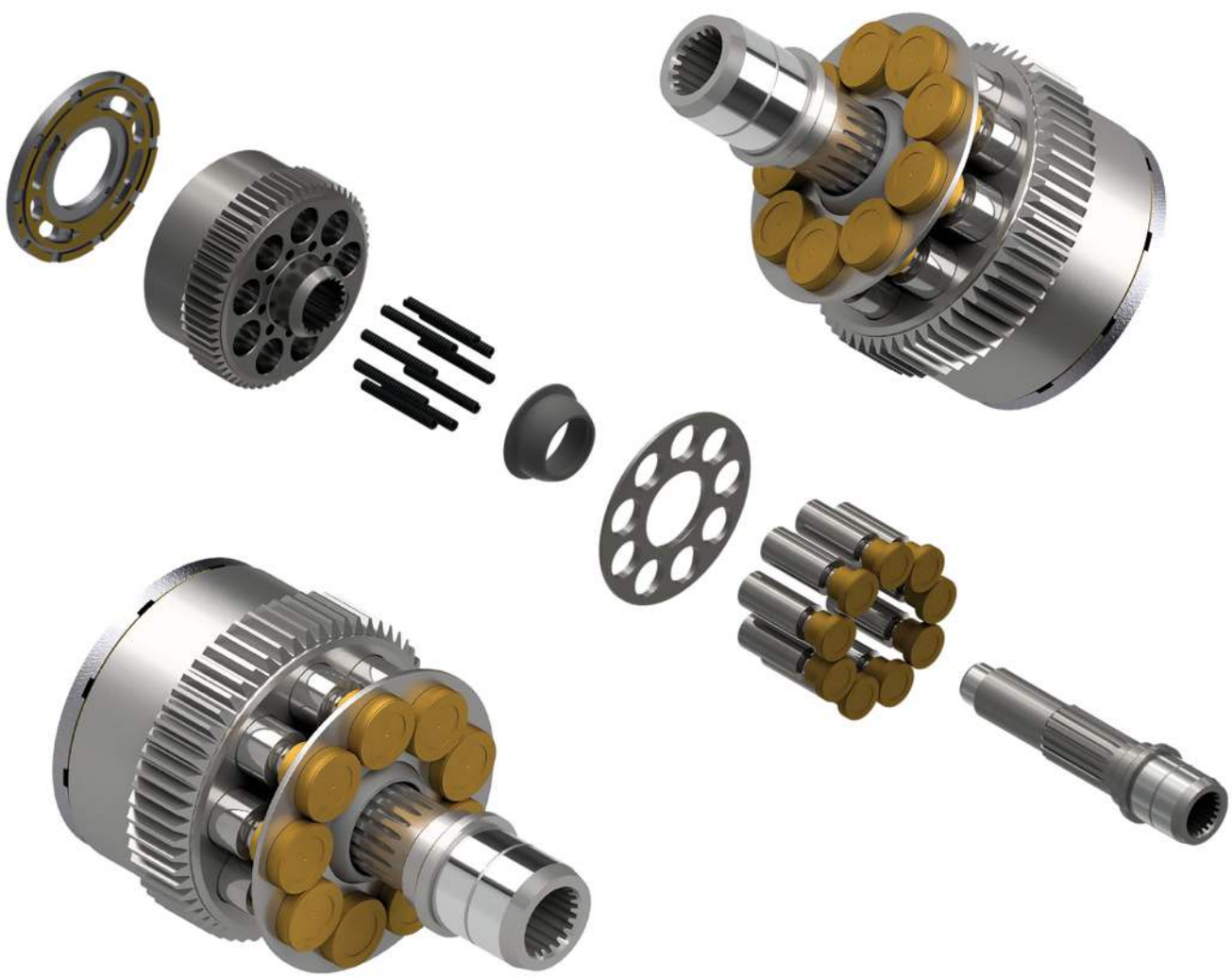

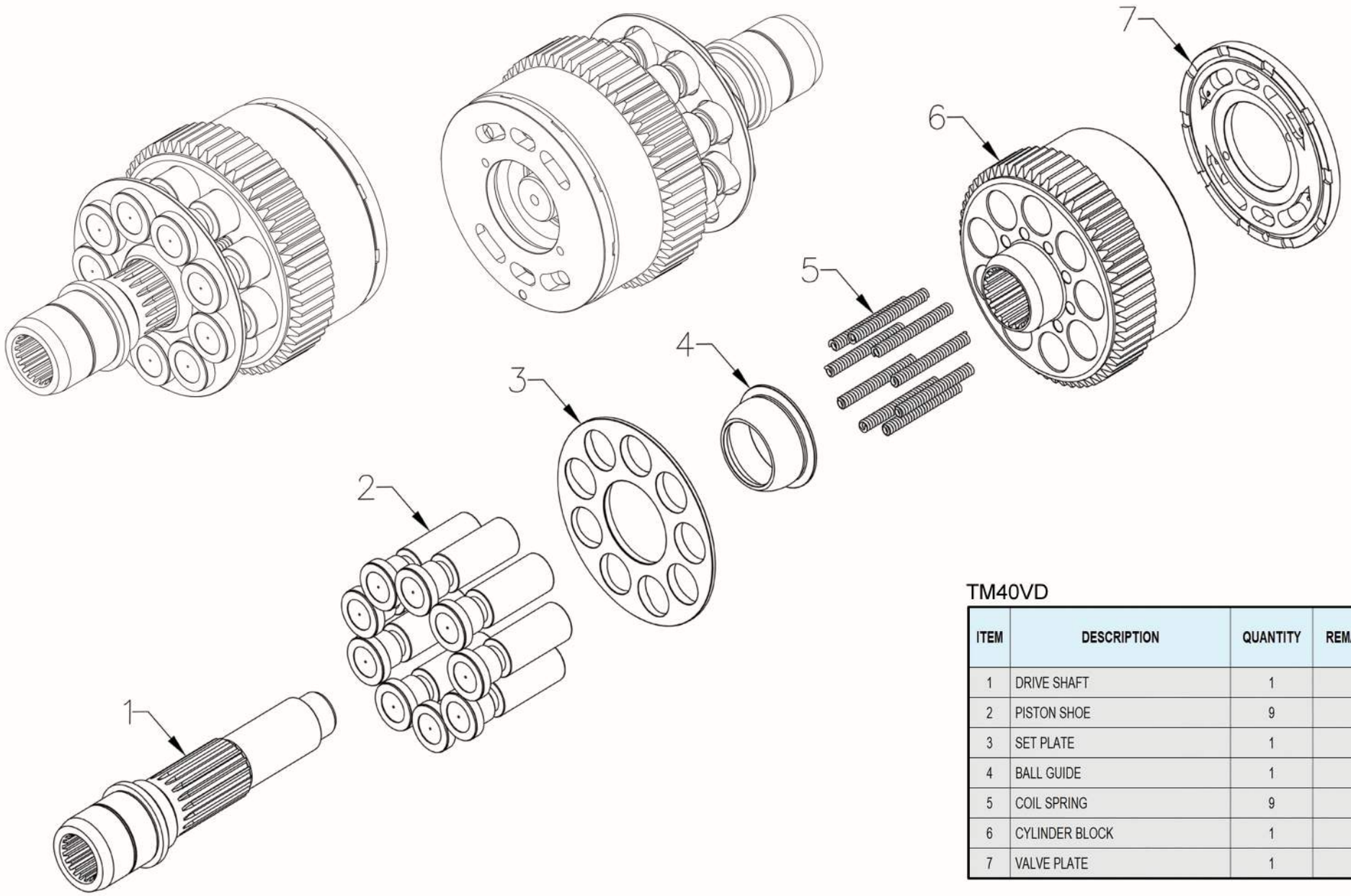

TM40VD

ITEM	DESCRIPTION	QUANTITY	REMARK
1	DRIVE SHAFT	1	
2	PISTON SHOE	9	
3	SET PLATE	1	
4	BALL GUIDE	1	
5	COIL SPRING	9	
6	CYLINDER BLOCK	1	
7	VALVE PLATE	1	

HAN DOK HYDRAULIC



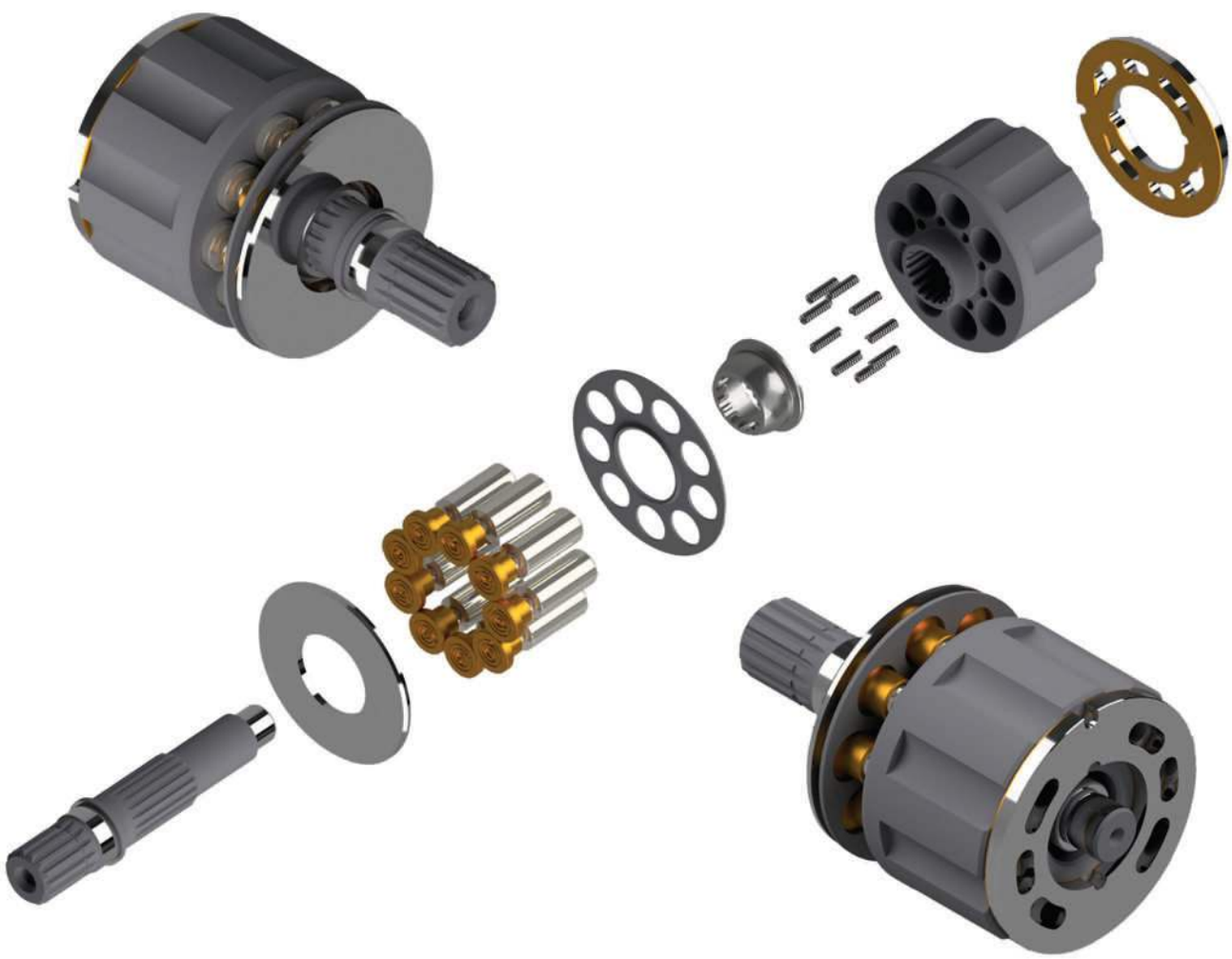

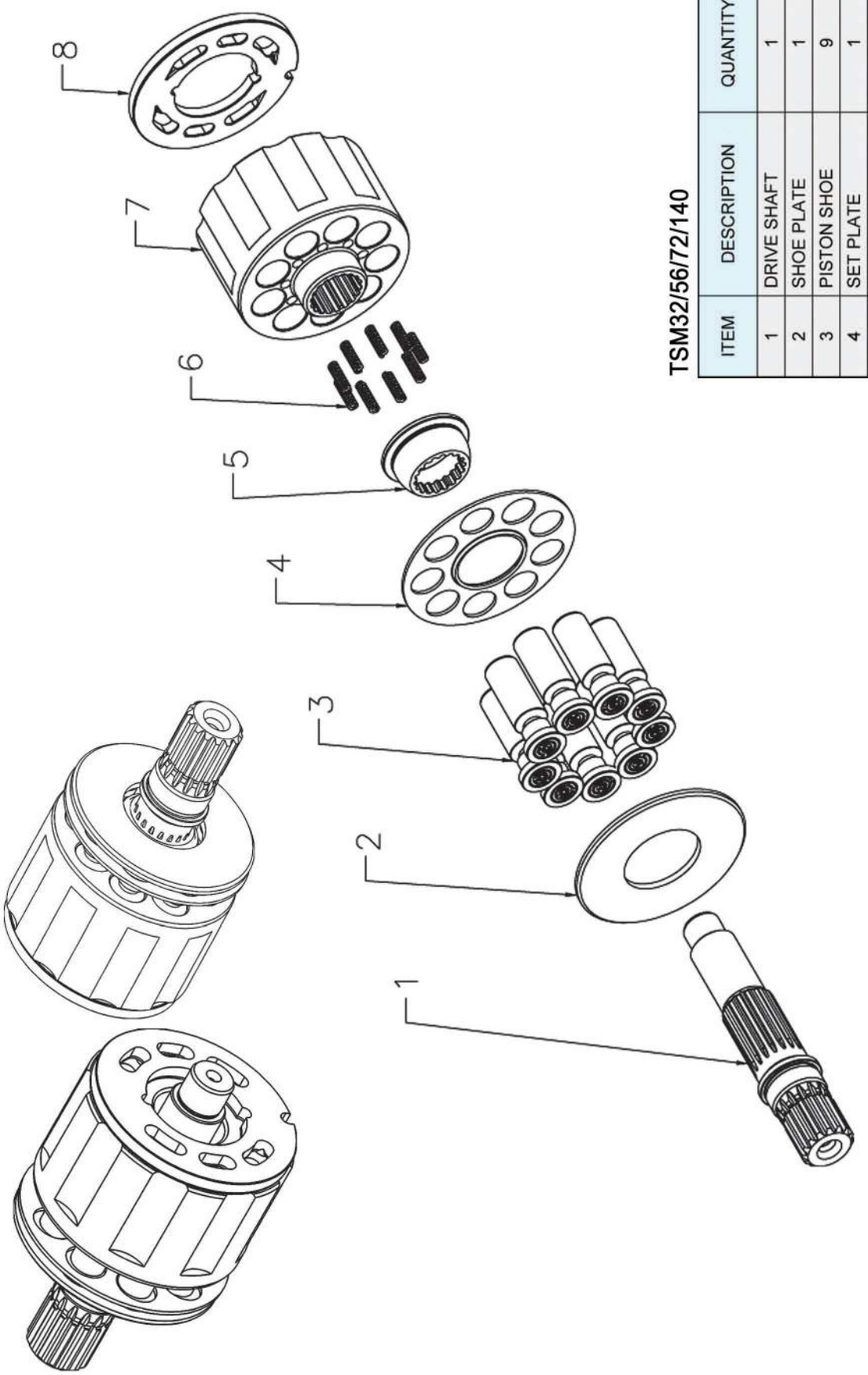

TSM32/56/72/140

ITEM	DESCRIPTION	QUANTITY	REMARK
1	DRIVE SHAFT	1	
2	SHOE PLATE	1	
3	PISTON SHOE	9	
4	SET PLATE	1	
5	BALL GUIDE	1	
6	COIL SPRING	9	
7	CYLINDER BLOCK	1	
8	VALVE PLATE	1	

HAN DOK HYDRAULIC

VRD63



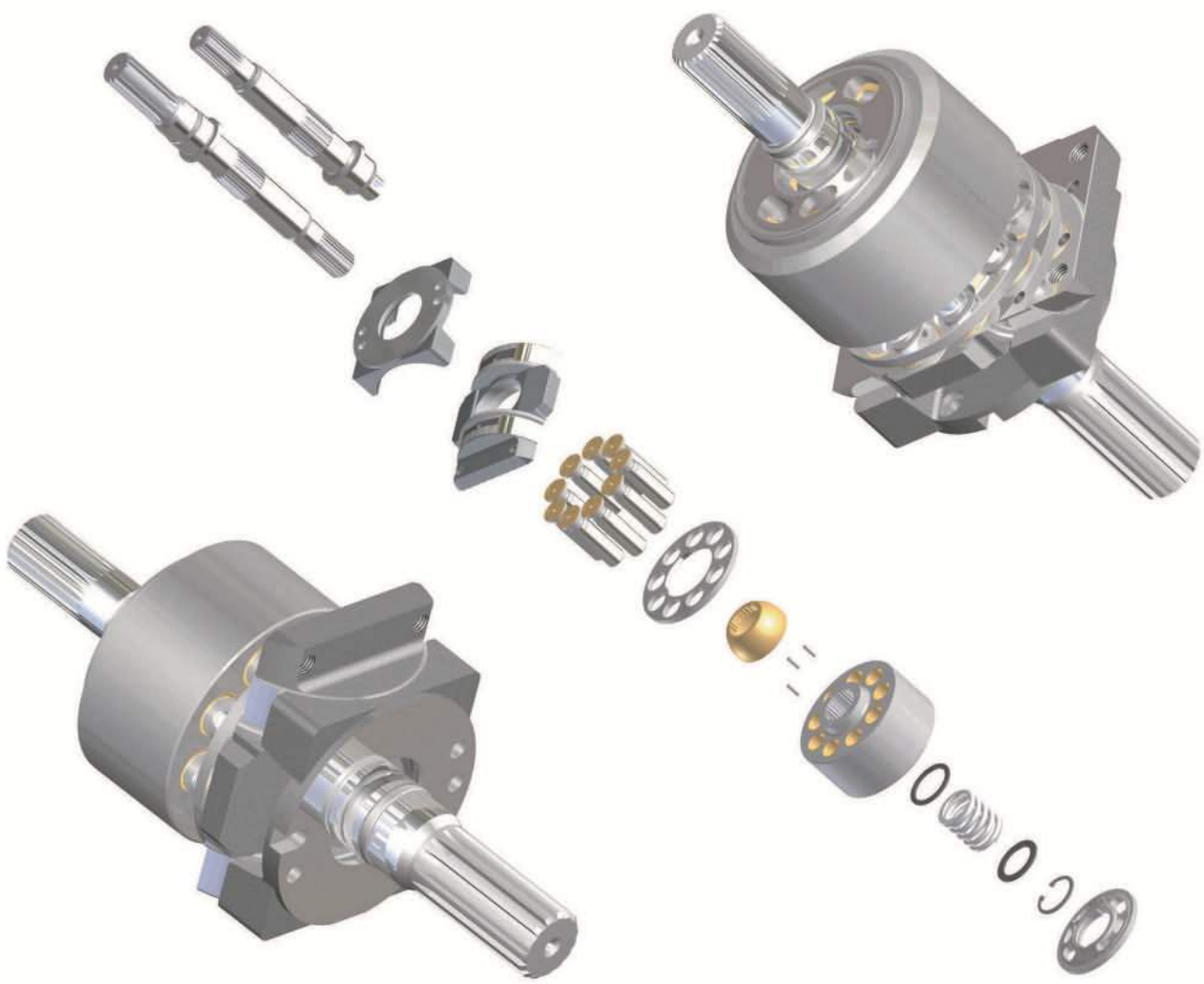

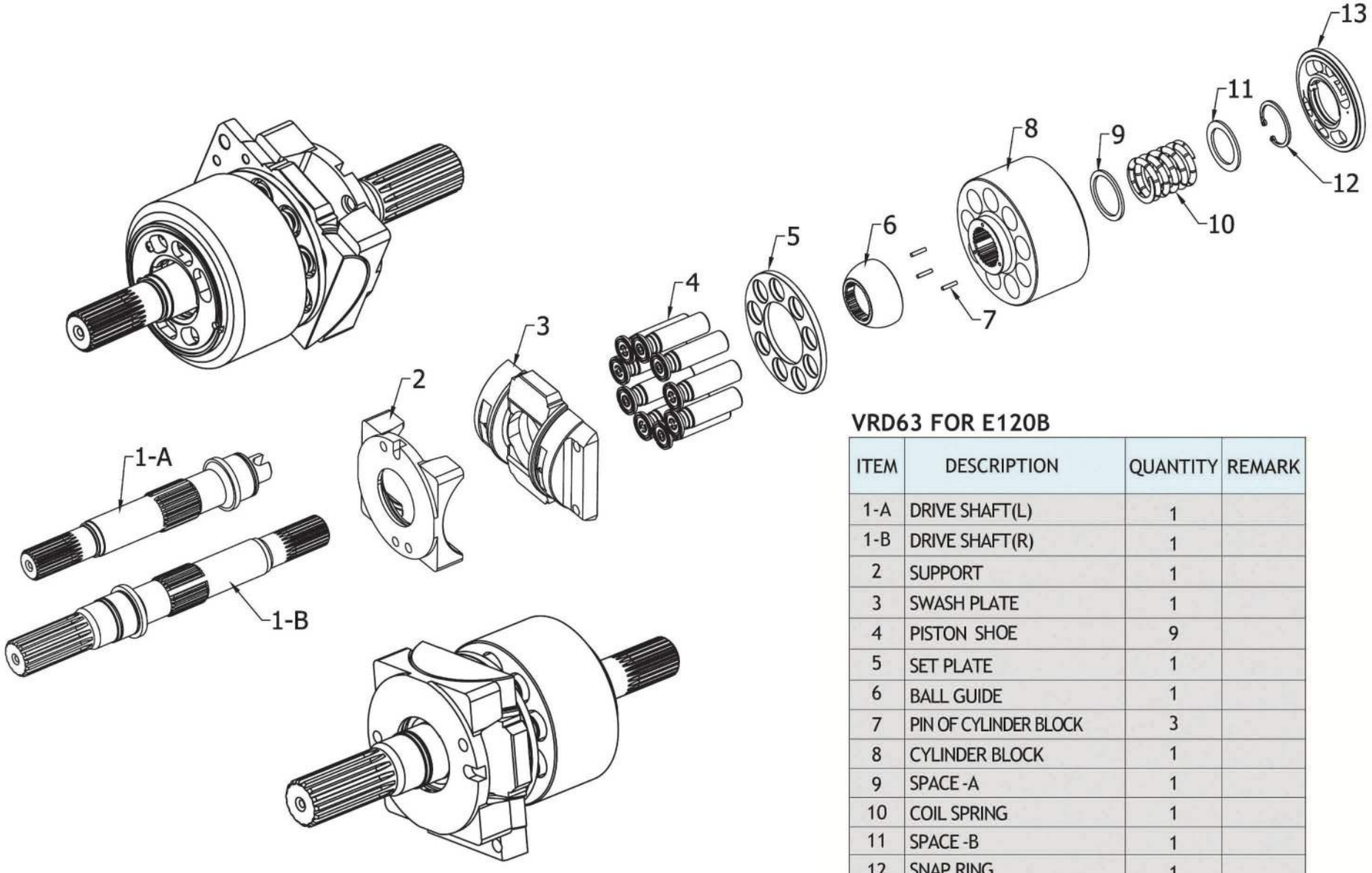

VRD63 FOR E120B

ITEM	DESCRIPTION	QUANTITY	REMARK
1-A	DRIVE SHAFT(L)	1	
1-B	DRIVE SHAFT(R)	1	
2	SUPPORT	1	
3	SWASH PLATE	1	
4	PISTON SHOE	9	
5	SET PLATE	1	
6	BALL GUIDE	1	
7	PIN OF CYLINDER BLOCK	3	
8	CYLINDER BLOCK	1	
9	SPACE -A	1	
10	COIL SPRING	1	
11	SPACE -B	1	
12	SNAP RING	1	
13	VALVE PLATE(L/R)	1	

HAN DOK HYDRAULIC

Kawasaki Series Replacement Parts



Uchida & Hydromatic & Rexroth Series Replacement Parts



Hitachi Series Replacement Parts



Mitsubishi / Caterpillar Series Replacement Parts



Komatsu & Shibaura & Deijin Seiki Series Replacement Parts



Linde & Kayaba & Liebherr Series Replacement Parts

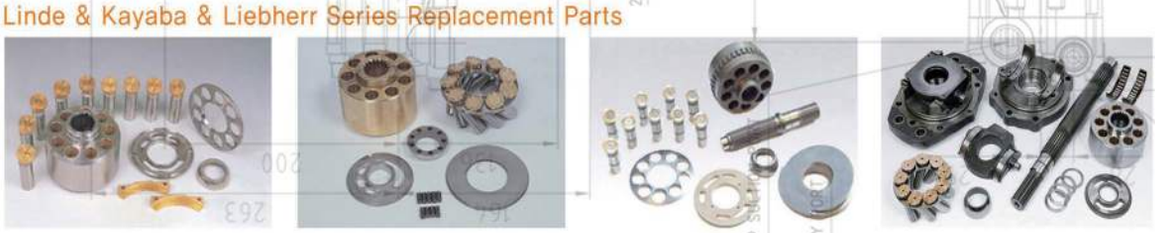

HANDOK HYDRAULIC

13, Golden root-ro 130beon-gil, Juchon-myeon
Gimhae-si, Gyeong-nam, Korea

TEL : 82-55-310-1300

FAX : 82-55-326-2245

E-mail : handok@hydraulic.co.kr

www.hydraulic.co.kr

This publication, or parts thereof, may not be reproduced in any form, By and method for any purpose.
Copyright © 2023 All rights reserved by HANDOK HYDRAULIC.
Printed in Korea.