www.hydraulic.co.kr



ASSEMBLIES
CATALOG

**HYDRAULIC PUMPS & MOTORS
FOR HEAVY CONSTRUCTION EQUIPMENT,
MARINE AND INDUSTRY**

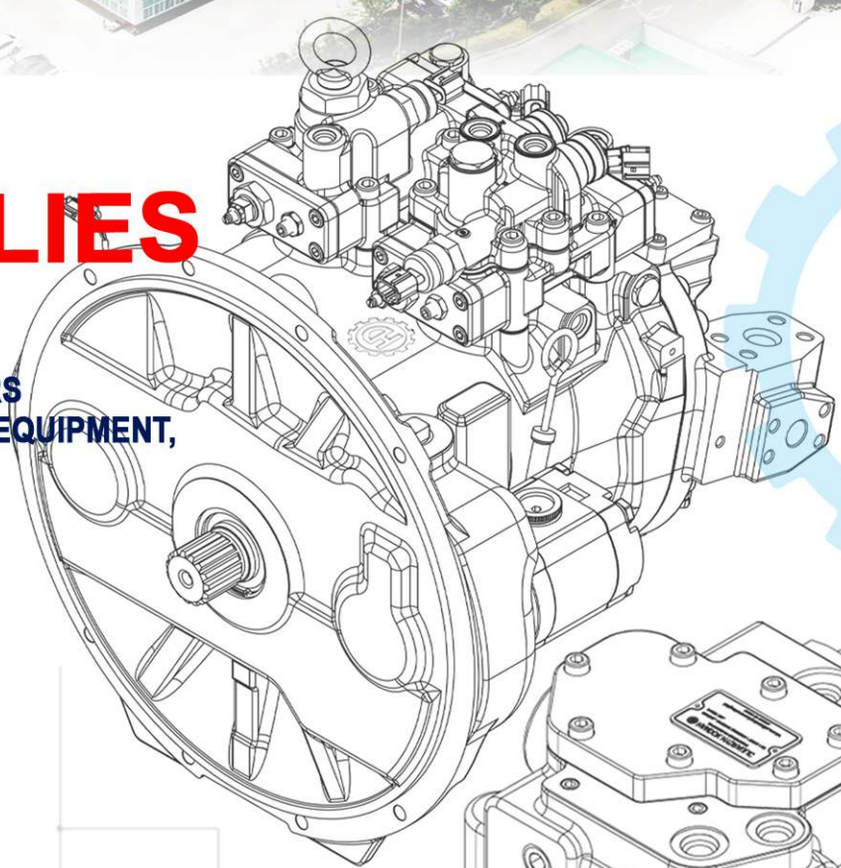

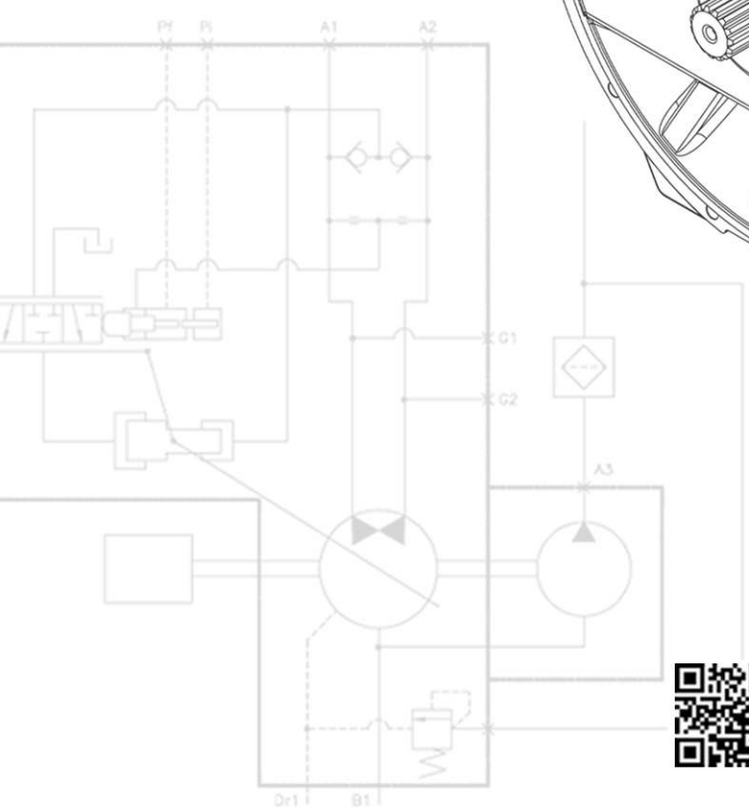

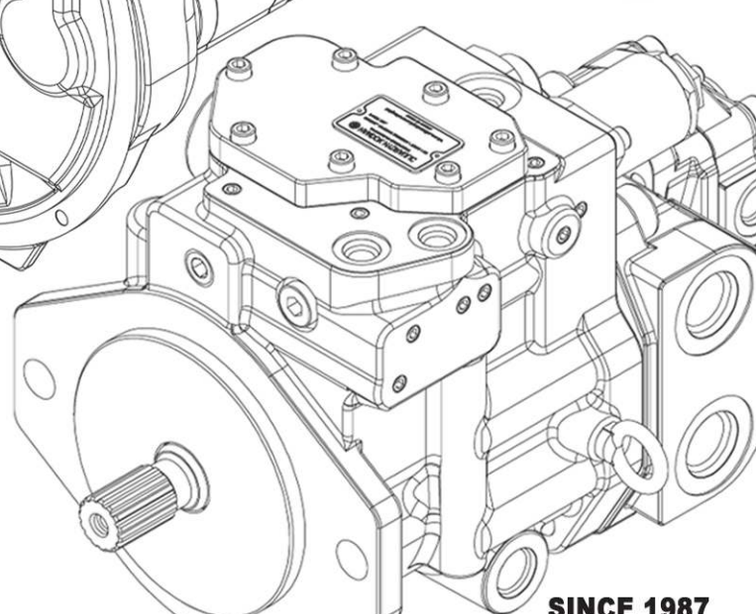

SINCE 1987
HANDOK HYDRAULIC
한독하이드로릭

Production Facilities





Shop Floor and each of Divisions




















HPV0102 MAIN PUMP


H5V200DPH MAIN PUMP


H3V112 MAIN PUMP


HPV116 MAIN PUMP


H3V280SH SINGLE PUMP

Han Dok Hydraulic Company has been known as a leading manufacturer in this field and we are ahead of the competition when it comes to quality, delivery & price.

CEO Message

Firstly we would like to express our sincere thanks for your warm patronage extended to our products so far.Since the company's foundation in 1987 starting repairing business of hydraulic pumps for heavy construction equipments. HanDok Hydraulic has been engaging in producing a wide range of replacements parts for hydraulic pumps and motors for various heavy construction equipments and industry machinery from 1991.

As a leading manufacturer in hydraulic pump&motor components makers in Korea with modernized equipments and machinery backed up with accumulated technology and a lot of experience, we have been supplying our quality products to our valued customers at home and abroad.

We always make every efforts to produce perfect quality products with competitive price.

We are try to do our best in order to obtain a worldwide reputation through our continuous R&D. We sincerely hope this brochure will be helpful for you to understand our scope of products and we will put top priority on the quality assurance to meet your needs at the right time with competitive price and prompt delivery.

We look forward to having a opportunity to serve you in the very near future.

president
Ra Kyung Bae

Company History

The establishment stage

- HANDOK HYDRAULIC Company was estalished in June 1987 at Busan-City, Korea.
- Started not only repairing but also producing in component parts of Hydraulic Pump and Motor.



1987

The pioneering stage

- Moved factory to Gimhae city.
- Beginning to brass brazing process on the surface (Cylinder block & Valve plate).
- Opened a researching department by KIMM "korea institute of machinery and materials" for Swash Plate type Axis piston Pumps & Motors and Bent Axis type piston Pumps & Motors for hydraulic components.
- Beginning to test Hydraulic Pump & motor assembly by test machine.



1988 -2001

The leaping stage

- Opened second factory in Gimhae city in order to increase productions line.
- Appointed the "Clean company" by the environment administration office.
- Acquired the certificate of ISO 14000, ISO9001 system by BSI "British standards institution".
- Acquired the patent for Bent Axial type Hydraulic Pumps and Motors of HSTM, system from Korea, China , etc.
- Registered trademark HD. "Han-Dok Hydraulic" in Korea, China, Vietnam, Malaysia, Indonesian, etc.
- Production the complete units (assembly) not only bent axis type axial piston Pumps but also Swash Plate axis type axial piston Pumps.
- Beginning to produce the gear Pump assembly.
- Appointed "top ranking company" by the small and medium industries administration in korea.
- Acknowledged as one of the best prospective company by KIMM "korea institute of machinery and materials".



2002 -2006

2007 -2017

The rebounding stage

- Opened third factory in Gimhae city in order to increase productions line.
- Acquired the brazing patent for Cylinder Block (Barrel) in the Swash Plate type and Bent Axial type Pumps and Motors from Korea.
- Trade mark application in USA, INDIA, BRAZIL, RUSSIA and EGYPT.
- Development and production of control valve.
- Development and production of RVDT sensor.





2018

We challenge the world with constant innovation



Global brand standing out among other brands in the world.

HANDOK HYDRAULIC

HANDOK HYDRAULIC's excellent brand power attracting international attention all over the world has established the new energy which changes the world.
The indomitable will pioneering the world the advanced core technology, the outstanding global talent are the growth powers of HANDOK HYDRAULIC.

KOREA AEO
Korea Customs Service
Authorized Economic Operator
Certificate No.
KR AEO 3115024

ISO 9001: 2008



Certificate
of Registration

This is to certify that :

HAN DOK HYDRAULIC CO.

#194-8, Jisan-Dong, Gimhae-Si, Gyeongsan, Korea

Has been assessed by International Certification Registrar Ltd., in respect of their Quality Management Systems and found to comply with

ISO 9001:2008

Approval is hereby granted for registration providing the rules and conditions relating to certification are observed at all times.

Certification Scope

Design and Manufacture of
Hydraulic Pump, Hydraulic Valve, Hydraulic Motor and Hydraulic Parts

Certificate Issue Date : 19th November 2015 Initial issued date : 20th November 2009
Expiration Date : 18th November 2018 Certificate No. : Q13138/07

The Seal of ICR Limited was here to affixed in the presence of :

President

ISO 14001: 2004



Certificate
of Registration

This is to certify that :

HAN DOK HYDRAULIC CO.

#194-8, Jisan-Dong, Gimhae-Si, Gyeongsan, Korea

Has been assessed by International Certification Registrar Ltd., in respect of their Environmental Management Systems and found to comply with

ISO 14001:2004

Approval is hereby granted for registration providing the rules and conditions relating to certification are observed at all times.

Certification Scope

Design and Manufacture of
Hydraulic Pump, Hydraulic Valve, Hydraulic Motor and Hydraulic Parts

Certificate Issue Date : 19th November 2015 Initial issued date : 20th November 2009
Expiration Date : 18th November 2018 Certificate No. : EI1200/07

The Seal of ICR Limited was here to affixed in the presence of :

President

Quality assurance is the most important key of successful business.

■ Management policy

We put first priority on keeping top quality through strict quality control testing at each stage of the production process.

QUALITY POLICY

BEST QUALITY
We produce our goods with the best quality.

REASONABLE PRICE
Our products are with the most reasonable price.

VARIOUS ITEMS
Our various inventory can meet our esteemed customer's needs.

BEST SERVICE
We provide our best service for your satisfaction.

■ Vision

We are proceeding to make better future with constant challenge and passion.

QUALITY POLICY

BEST QUALITY
We pursue top quality

VARIOUS ITEMS
Our various inventory can meet our esteemed customer's needs.

COMPETITIVE PRICE
To give competitive price to our customers is our goal

BEST SERVICE
We provide our best service for your satisfaction.


Form Measuring instrument


Coil Spring Test Machine


3D Precision Measuring Equipment


Brinell & Rock Well Hardness Tester


Quality Control for Hardness


Illumination Meter & Metallurgical Microscope


Inspection for Brass Brazing with Ultrasonic Test


Optical Emisson Spectrometer


Tension And Yield Strength Test

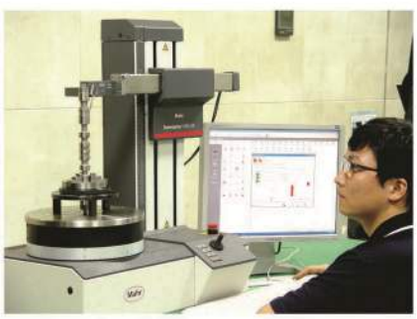
Form Tester


Precision Measuring for Quality Control

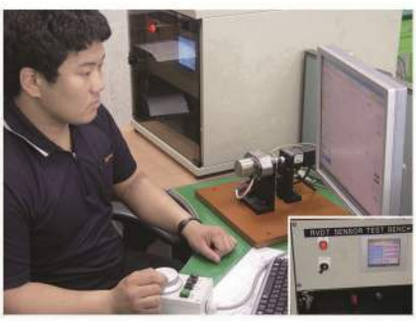
Angle Sensor Tester

VARIOUS TEST MACHINERY

BENCH PUMP TEST



BENCH MOTOR TEST

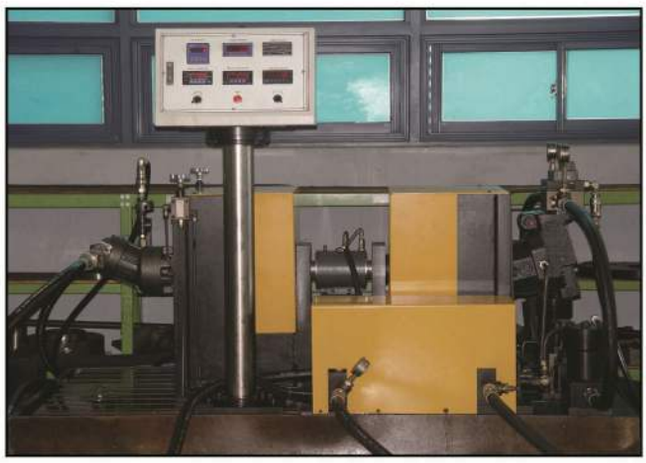

GEAR PUMP TEST



EPR TEST



REGULATOR TEST



PRESSURE ENDURANCE TEST



VARIOUS TEST MACHINERY

MULTI TEST MACHINERY



HPVO50/O102/O118 PUMP

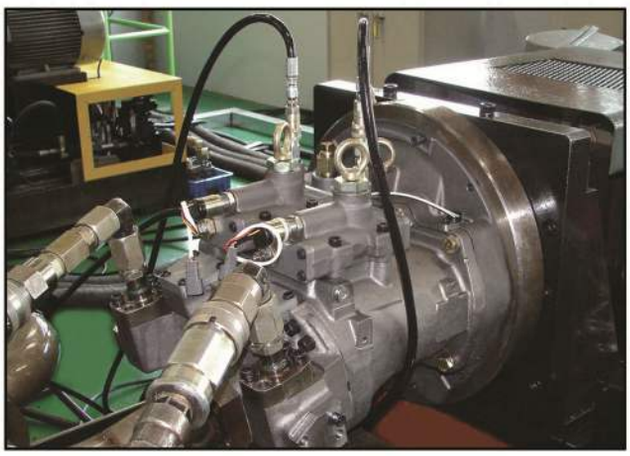

H3V112DTK PUMP

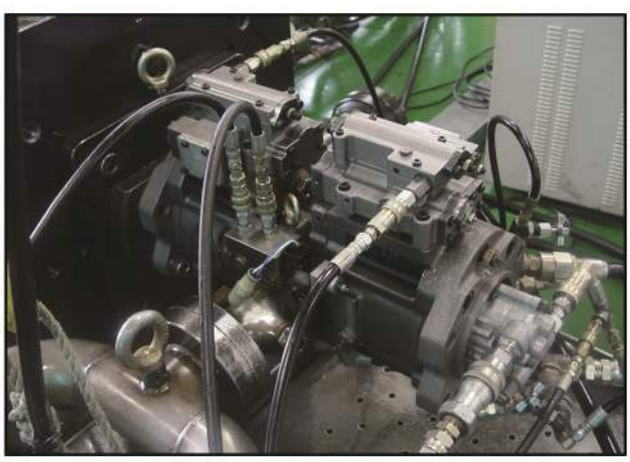

LOAD SENSING CONTROL VALVE

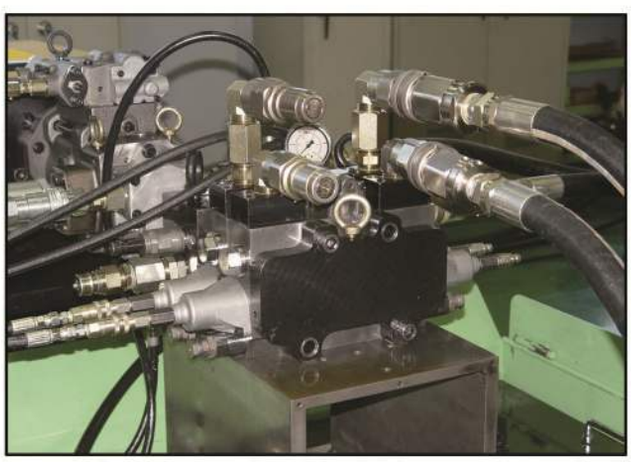

H6VM55/80/107/160/250 MOTOR



DOUBLE GEAR PUMP



PERFORMANCE CURVE FOR SWASH PLATE & BENT AXIS TYPE PISTON PUMPS

H3V63/112

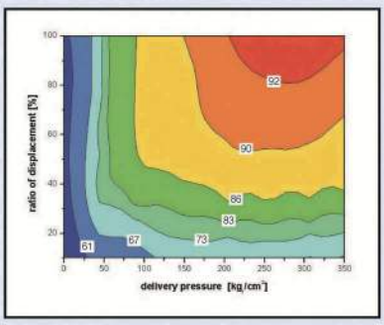

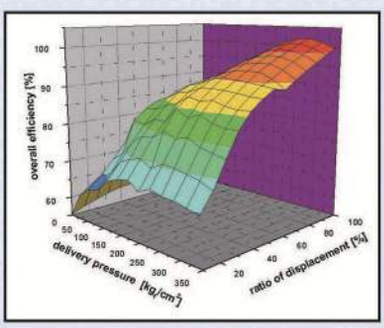

H3V140/180

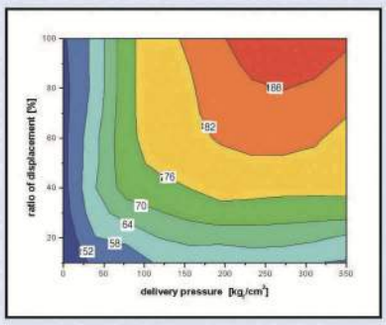

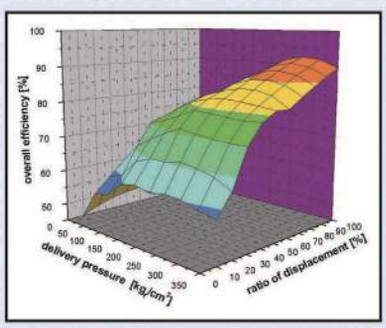

HPV116/145

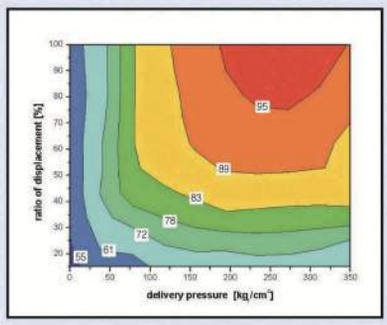

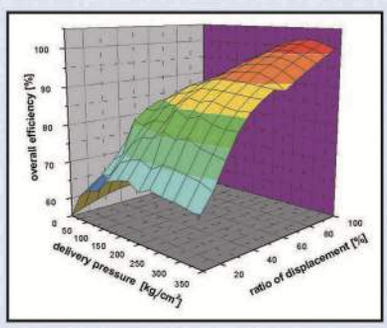

Max. Speed : 2,500rpm
Suction Pressure : 0~1kg/cm²(bar)
Oil Temperature : 50℃ Oil Viscosity : 32mm²/s (cSt)

SWASH PLATE TYPE PISTON PUMPS



H3V PUMP SERIES (63/112/140/180/280)

BENT AXIS TYPE PISTON PUMPS



HPV 116/145 PUMP SERIES

H3V/H5V SERIES SUCTION & DELIVERY PORT

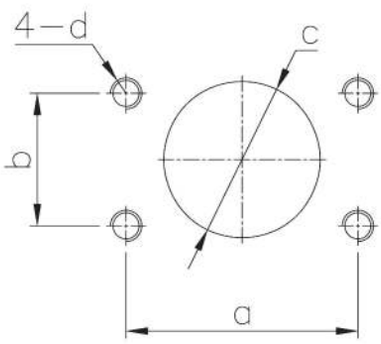

Flange Mounting face for Suction Port

MODEL	a	b	c	d	rule	
H3V63S / H5V80S	69.9	35.7	Φ38	M12X1.75P Dp18	SAE J518C (CODE61)	1-1/2"
H3V112S / H5V140S	88.9	50.8	Φ64	M12X1.75P Dp24		2-1/2"
H3V140(180)S / H5V200S	106.4	61.9	Φ76	M16X2.0P Dp24		3"
H3V140SH / H3V180SH / H5V200SH	106.4	61.9	Φ76	M16X2.0P Dp24		3"
H3V280SH	120.7	69.8	Φ80	M16X2.0P Dp24		3-1/2"
H3V63 / H3V112	88.9	50.8	Φ60	M12X1.75P Dp18		2-1/2"
H3V140 & H3V180	106.4	61.9	Φ76	M16X2.0P Dp24		3"
H3V280	130.2	77.8	Φ102	M16X2.0P Dp26		4"
H3V180DTH / H5V200DTH	106.4	61.9	Φ76	M16X2.0P Dp28		3"
H3V280DTH	120.7	69.8	Φ89	M16X2.0P Dp30		3-1/2"
H3V63DTP / H5V80DTP H3V112DTP/H5V140DTP	88.9	50.8	Φ60	M12X1.75P Dp24		2-1/2"
H3V140DTP / H5V160DTP H3V180DTP	106.4	61.9	Φ76	M16X2.0P Dp25		3"
H3VL28	58.7	30.2	Φ32	M10X1.5P Dp15		1-1/4"
H3VL80	77.8	42.9	Φ50	M12X1.75P Dp18		2"
H3VL112/H3VL140	88.9	50.8	Φ60	M12X1.75P Dp24		2-1/2"
H5V200DPH / H5V212DPH	106.4	61.9	Φ76	M16X2.0P Dp30		3"
H5V212DPH(CAT)	120.7	69.8	Φ78	M16X2.0P Dp24		3-1/2"
H3V112DP	88.9	50.8	Φ60	M12X1.75P Dp21		2-1/2"
H5V160DP	130.2	77.8	Φ102	M16X2.0P Dp26		4"
H5VG200SH	106.4	61.9	Φ76	M16X2.0P Dp30		3"

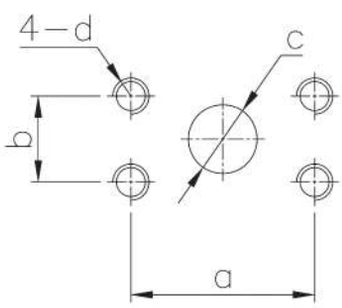

Flange Mounting face for Delivery Port

MODEL	a	b	c	d	rule	
H3V63S / H5V80S	57.2	27.8	Φ25	M10X1.5P Dp18	SAE J518C (CODE62)	1"
H3V112S / H5V140S	66.7	31.8	Φ32	M12X1.75P Dp24		1-1/4"
H3V140(180)S / H5V200S	79.4	36.5	Φ38	M16X2.0P Dp24		1-1/2"
H3V140SH / H3V180SH / H5V200SH	57.2	27.8	Φ25	M12X1.75P Dp24		1"
H3VL28	47.7	22.2	Φ19	M10X1.5P Dp15		3/4"
H3VL80	52.4	26.2	Φ25	M10X1.5P Dp17		1-1/4"
H3VL112/H3VL140	66.7	31.8	Φ32	M12X1.75P Dp24		1-1/4"
H3V280SH	66.7	31.8	Φ32	M12X1.75P Dp25		1-1/4"
H5VG200SH	57.2	27.8	Φ25	M12X1.75P Dp22		1"

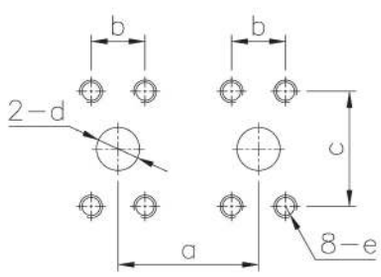

Flange Mounting face for Delivery Port

MODEL	a	b	c	d	e	rule	
H3V63	62	23.8	50.8	Φ19	M10X1.5P Dp16	SAE J518C (CODE62)	3/4"
H3V112					M10X1.5P Dp23		
H3V140 & H3V180	76	27.8	57.2	Φ25	M12X1.75P Dp23		1"
H3V280	98	36.6	79.6	Φ38	M16X2.0P Dp25		1-1/2"
H3V180DTH / H5V200DTH	116	27.8	57.2	Φ25	M12X1.75P Dp22		1"
H3V280DTH	123	31.8	66.7	Φ32	M12X1.75P Dp28		1-1/4"
H3V63DTP / H5V80DTP /H3V112DTP	62	23.8	50.8	Φ19	M10X1.5P Dp20		3/4"
H5V140DTP	70	27.8	57.2	Φ25	M12X1.75P Dp22		1"
H3V140DTP / H5V160DTP H3V180DTP	84	27.8	57.2	Φ25	M12X1.75P Dp24		1"
H5V200DPH	75	27.8	57.2	Φ25	M12X1.75P Dp22		1"
H3V112DP	68	23.8	50.8	Φ19	M10X1.5P Dp20		3/4"
H5V160DP / H5V212DPH/ H5V212DPH(CAT)	83	31.8	66.7	Φ32	M12X1.75P Dp22		1-1/4"

H64-PTO GEAR BOX

SPECIFICATIONS



MODEL	H64-PTO GEAR BOX		
Max. Output torque of transfer case (t max.)	3,200n.m		
Max. Output speed of transfer case (n1 max.)	2,700min-1		
Output power	335kw		
Gear Ratio	0.825 : 1	0.772 : 1	0.659 : 1
Gear oil	7.3 liter CLP220 DIN51517		
Weight	150kg		

FLANGE MOUNTING SIZE

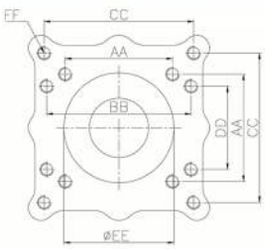

(mm)

MODEL	AA	BB	CC	DD	EE	FF
H64-PTO GEAR BOX	161.6	216.6	224.5	125	165.1 180	M20x2.5P DP46

ADAPTER A & B SIZE

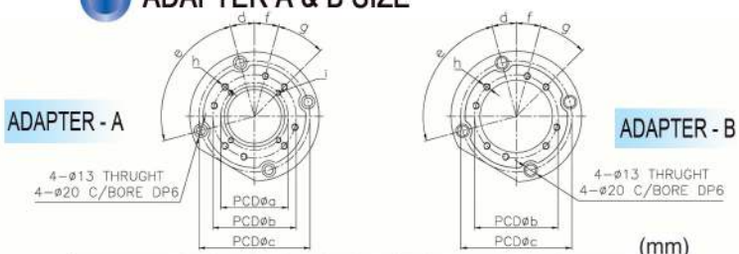

(mm)

MODEL	a	b	c	d	e	f	g	h	i
ADAPTER-A	100	124	165	15	90	15	30	8-M10x1.5P DP27	4-M8x1.25P DP16
ADAPTER-B	-								-

Dimension of Shaft End(Spline type)



(mm)

MODEL	No.of teeth	Pitch circle dia (mm)	Module	Pressure angle	STANDRAD
2-SPLINE (BOOM PUMP)	13	41.275	8/16DP	30°	SAE
	17	42.5	2.5	20°	JIS
	24	48	2.0	30°	DIN 5480

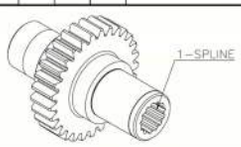

(mm)

MODEL	No.of teeth	Pitch circle dia (mm)	Module	Pressure angle	STANDRAD
1-SPLINE (MAIN PUMP)	13	41.275	8/16DP	30°	SAE
	17	42.5	2.5	20°	JIS
	24	48	2.0	30°	DIN 5480
	28	56	3.0	30°	DIN 5480

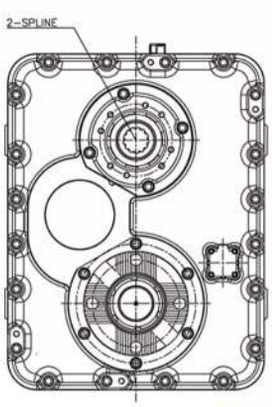

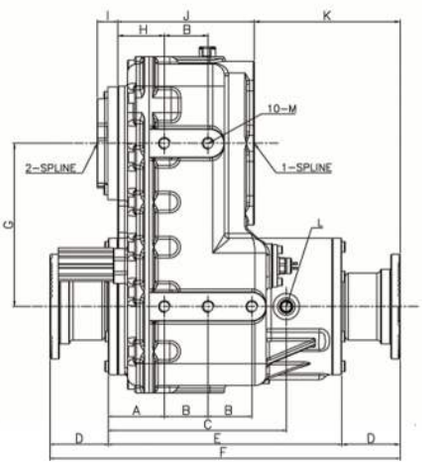

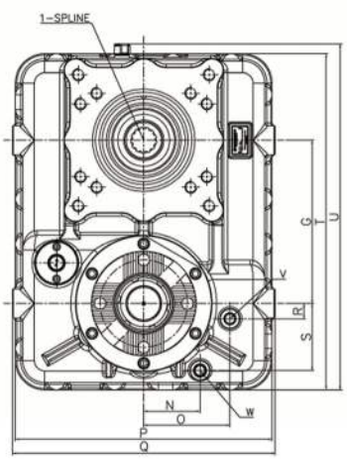

DIMENSIONS

(mm)

MODEL	A	B	C	D	E	F	G	H	I	J	K	L	M	N	O	P	Q	R	S	T	U	V	W
H64-PTO GEAR BOX	96	75	305	100	400	600	280	80	35	234	250	M18x1.5P	M20x2.5P DP53	96	148	440	450	26	115	576	663	PF1/2	PF1/2

H10VO28/45/71/74(DR TYPE)
CUT-OFF CONTROL
SWASH PLATE TYPE PISTON PUMP

SPECIFICATIONS

MODEL	H10VO28	H10VO45	H10VO71 H10VO74
	DR TYPE		
Discharge Rate(cc/rev)	28	45	71 74
Max. Pressure (kg/cm²)	280		
Max. Speed (rpm)	3,000		



Dimensions of Shaft End(Spline Type)

MODEL		No. of teeth	Pitch circle dia(mm)	Module	Pressure angle	Standard
H10VO28	DR TYPE	13	20.64	16/32	30°	SAE J498B
H10VO45		15	23.813			SAE J498B
H10VO71/74		14	28	2		DIN 5480

Dimensions of Shaft End(Key Type)

MODEL	a	b	c	d	e	Standard
H10VO28 DR TYPE	22.225	25	28.6	6.35	40.5	DIN6885

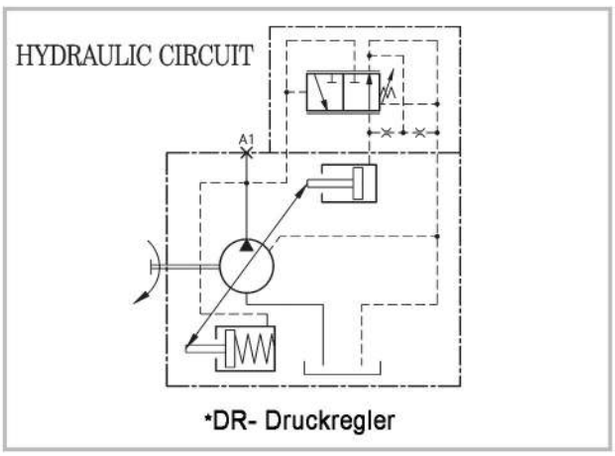

Flange Mounting face for Suction Port

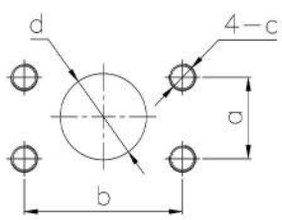

(mm)

	H10VO28	H10VO45	H10VO71 H10VO74
	DR TYPE		
a	30.2	35.7	42.9
b	58.7	69.9	77.8
c	7/16-14UNC DP24	M12X1.75P DP29	
d	Ø32	Ø40	Ø50

Flange Mounting face for Delivery Port

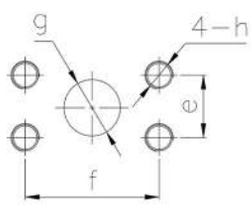

(mm)

	H10VO28	H10VO45	H10VO71 H10VO74
	DR TYPE		
e	22.2	26.2	
f	47.6	52.4	
g	Ø20	Ø25	
h	3/8-16UNC DP18	M10X1.5P DP23	

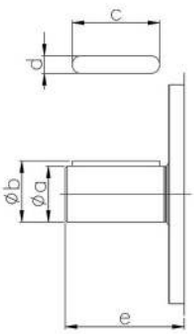

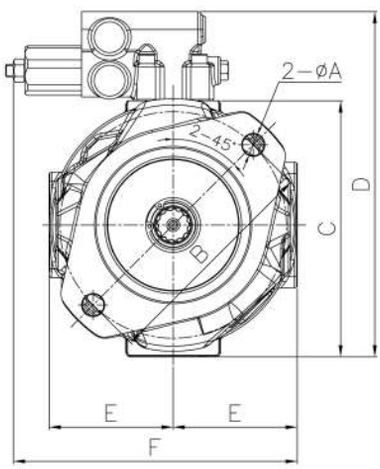

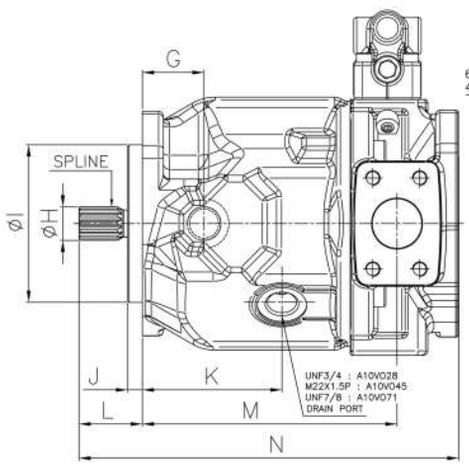

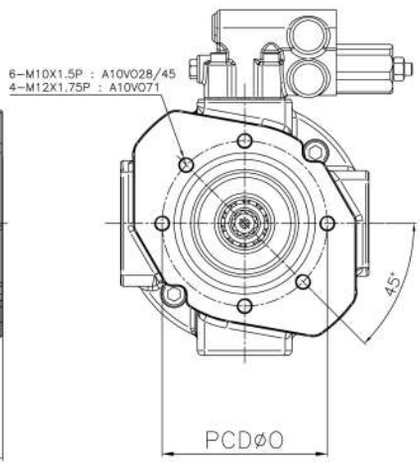

DIMENSIONS

(mm)

MODEL		A	B	C	D	E	F	G	H	I	J	K	L	M	N	O
H10VO28	DR TYPE	14	146	165	222.5	80	183	40	21.7	101.6	9.5	90	41	164	245	106.5
H10VO45				185	241.5	90	193	45.5	25		8.5	96.5	46	183.5	266.5	
H10VO71/74		18	181	213	269	104	207	62	31.2	127	12.7	114.8	55.5	217	312	-

H10VO28/45/71/74(DFLR TYPE)
LOAD SENSING & CUT-OFF & HORSE POWER CONTROL
SWASH PLATE TYPE PISTON PUMP

SPECIFICATIONS

MODEL	H10VO28	H10VO45	H10VO71 H10VO74
	DFLR TYPE		
Discharge Rate(cc/rev)	28	45	71 74
Max. Pressure (kg/cm²)	280		
Max. Speed (rpm)	3,000		

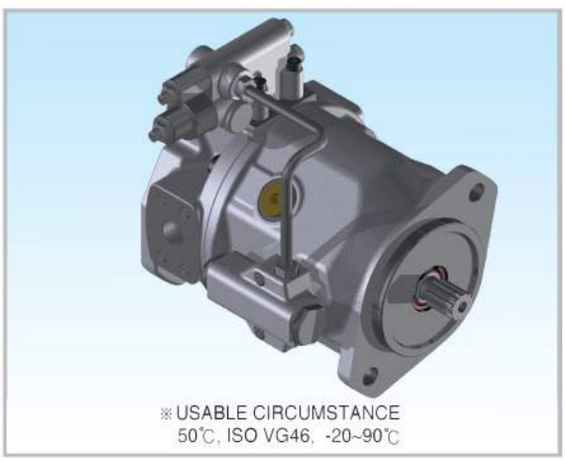

Dimensions of Shaft End(Spline Type)

MODEL		No. of teeth	Pitch circle dia(mm)	Module	Pressure angle	Standard
H10VO28	DFLR TYPE	13	20.64	16/32	30°	SAE J498B
H10VO45		15	23.813			SAE J498B
H10VO71/74		14	28	2		DIN 5480

Dimensions of Shaft End(Key Type)

MODEL	a	b	c	d	e	Standard
H10VO28 DFLR TYPE	22.225	25	28.6	6.35	40.5	DIN6885

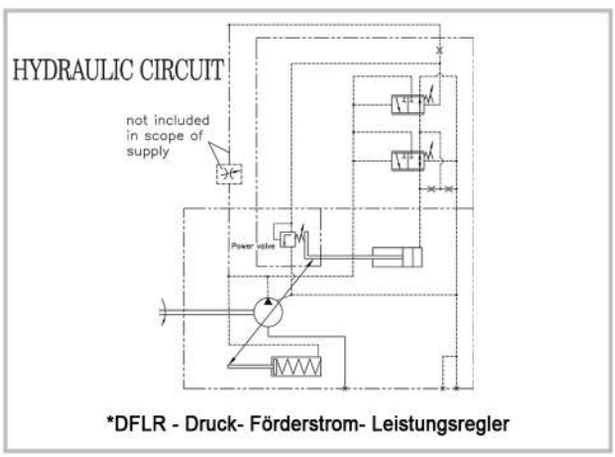

*DFLR - Druck- Förderstrom- Leistungsregler

Flange Mounting face for Suction Port

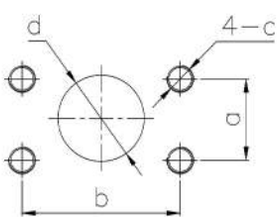

(mm)

	H10VO28	H10VO45	H10VO71 H10VO74
	DFLR TYPE		
a	30.2	35.7	42.9
b	58.7	69.9	77.8
c	7/16-14UNC DP24	M12X1.75P DP29	
d	Ø32	Ø40	Ø50

Flange Mounting face for Delivery Port

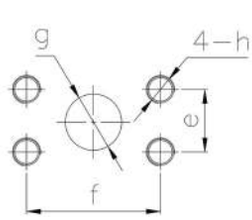

(mm)

	H10VO28	H10VO45	H10VO71 H10VO74
	DFLR TYPE		
e	22.2	26.2	
f	47.6	52.4	
g	Ø20	Ø25	
h	3/8-16UNC DP18	M10X1.5P DP23	

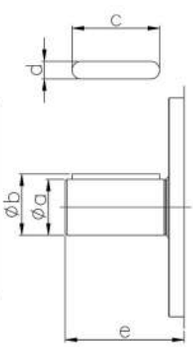

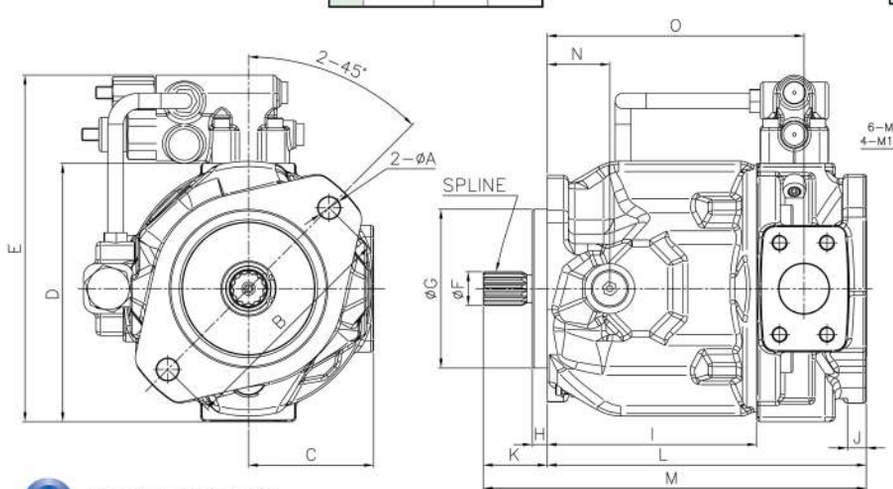

DIMENSIONS

(mm)

MODEL		A	B	C	D	E	F	G	H	I	J	K	L	M	N	O	P	Q
H10VO28	DFLR TYPE	14	146	80	165	222.5	21.7	101.6	9.5	134	12	41	204	245	40	164	106.5	185.5
H10VO45				90	185	241.5	25		8.5	149.5	22	46	220.5	266.5	45.5	183.5		205.5
H10VO71/74		18	181	104	213	269	31.2	127	12.7	177	-	55.5	257	312	62	217	-	233.5

H10VO28/45/71/74(DFR/DFR1 TYPE)
LOAD SENSING & CUT-OFF CONTROL
SWASH PLATE TYPE PISTON PUMP

SPECIFICATIONS

MODEL	H10VO28	H10VO45	H10VO71 H10VO74
	DFR/DFR1 TYPE		
Discharge Rate(cc/rev)	28	45	71 74
Max. Pressure (kg/cm²)	280		
Max. Speed (rpm)	3,000		

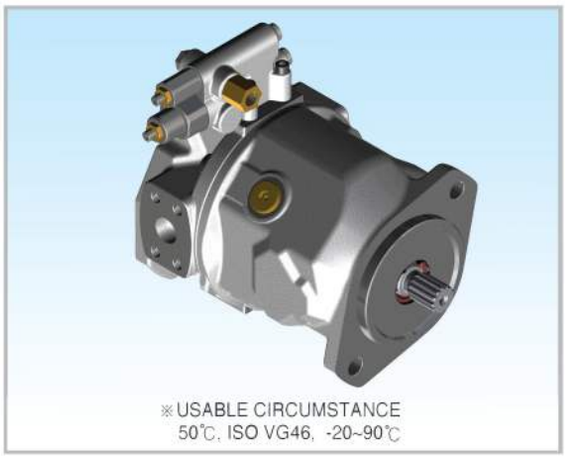

Dimensions of Shaft End(Spline Type)

MODEL		No. of teeth	Pitch circle dia(mm)	Module	Pressure angle	Standard
H10VO28	DFR DFR1 TYPE	13	20.64	16/32	30°	SAE J498B
H10VO45		15	23.813			SAE J498B
H10VO71/74		14	28	2		DIN 5480

Dimensions of Shaft End(Key Type)

MODEL	a	b	c	d	e	Standard
H10VO28 DFR/DFR1 TYPE	22.225	25	28.6	6.35	40.5	DIN6885

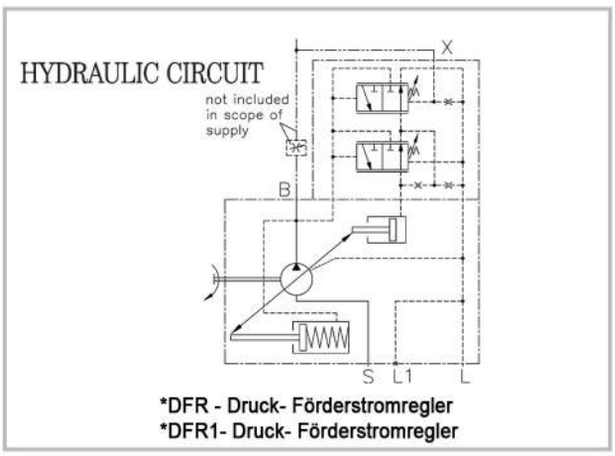

Flange Mounting face for Suction Port

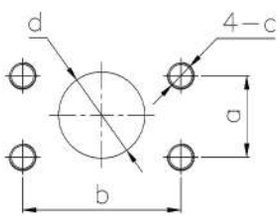

(mm)

	H10VO28	H10VO45	H10VO71 H10VO74
	DFR/DFR1 TYPE		
a	30.2	35.7	42.9
b	58.7	69.9	77.8
c	7/16-14UNC DP24	M12X1.75P DP29	
d	Ø32	Ø40	Ø50

Flange Mounting face for Delivery Port

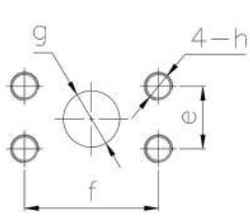

(mm)

	H10VO28	H10VO45	H10VO71 H10VO74
	DFR/DFR1 TYPE		
e	22.2	26.2	
f	47.6	52.4	
g	Ø20	Ø25	
h	3/8-16UNC DP18	M10X1.5P DP23	

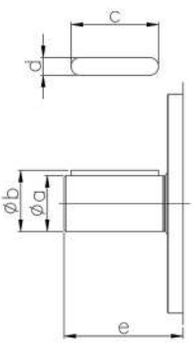

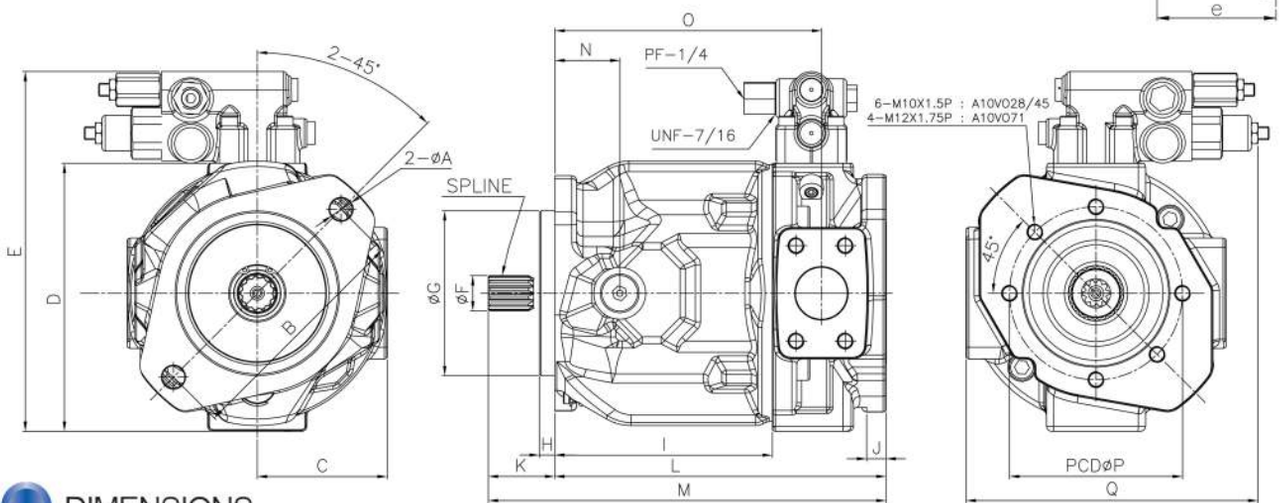

DIMENSIONS

(mm)

MODEL		A	B	C	D	E	F	G	H	I	J	K	L	M	N	O	P	Q
H10VO28	DFR DFR1 TYPE	14	146	80	165	222.5	21.7	101.6	9.5	134	12	41	204	245	40	164	106.5	180
H10VO45				90	185	241.5	25		8.5	149.5	22	46	220.5	266.5	45.5	183.5		190
H10VO71/74		18	181	104	213	269	31.2	127	12.7	177	-	55.5	257	312	62	217	-	206

H10VO28/45/71/74(ED TYPE)
LOAD SENSING & CUT-OFF CONTROL
SWASH PLATE TYPE PISTON PUMP

SPECIFICATIONS

MODEL	H10VO28	H10VO45	H10VO71 H10VO74
	ED TYPE		
Discharge Rate(cc/rev)	28	45	71 74
Max. Pressure (kg/cm²)	280		
Max. Speed (rpm)	3,000		



Dimensions of Shaft End(Spline Type)

MODEL		No. of teeth	Pitch circle dia(mm)	Module	Pressure angle	Standard
H10VO28	ED TYPE	13	20.64	16/32	30°	SAE J498B
H10VO45		15	23.813			SAE J498B
H10VO71/74		14	28	2		DIN 5480

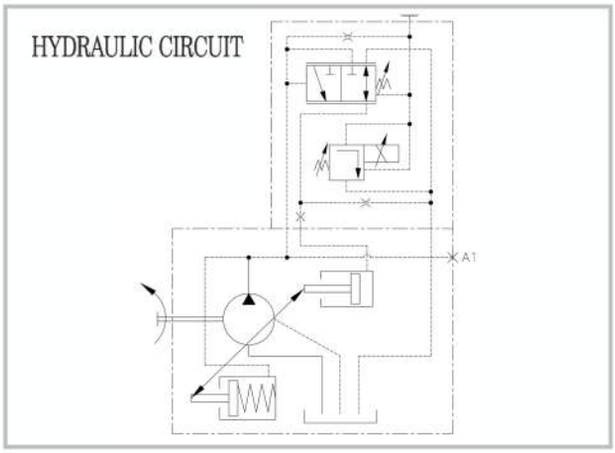

Flange Mounting face for Suction Port

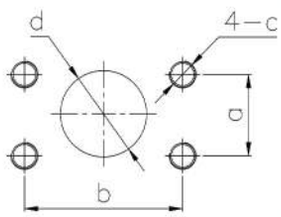

(mm)

	H10VO28	H10VO45	H10VO71 H10VO74
	ED TYPE		
a	30.2	35.7	42.9
b	58.7	69.9	77.8
c	7/16-14UNC DP24	M12X1.75P DP29	
d	Ø32	Ø40	Ø50

Flange Mounting face for Delivery Port

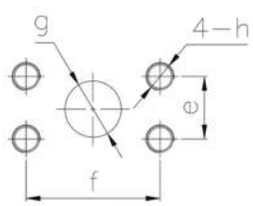

(mm)

	H10VO28	H10VO45	H10VO71 H10VO74
	ED TYPE		
e	22.2	26.2	
f	47.6	52.4	
g	Ø20	Ø25	
h	3/8-16UNC DP18	M10X1.5P DP23	

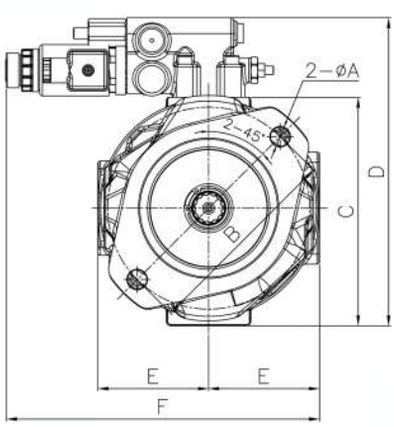

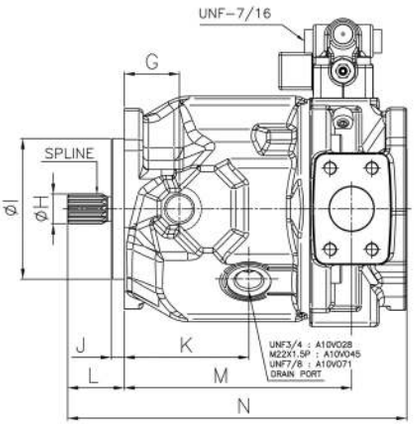

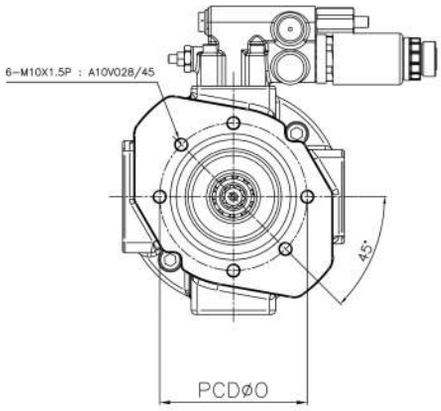

DIMENSIONS

(mm)

MODEL		A	B	C	D	E	F	G	H	I	J	K	L	M	N	O
H10VO28	ED TYPE	14	146	165	222.5	80	226	40	21.7	101.6	9.5	90	41	164	245	106.5
H10VO45				185	241.5	90	236	45.5	25		8.5	96.5	46	183.5	266.5	
H10VO71/74		18	181	213	269	104	250	62	31.2	127	12.7	114.8	55.5	217	312	-

H10VO28LR FOR ZAXIS70
HORSE POWER CONTROL
SWASH PLATE TYPE PISTON PUMP

SPECIFICATIONS

MODEL	H10VO28LR
Discharge rate(cc/rev)	28
Max. pressure (kg/cm²)	260
Max.speed(rpm)	2300

Dimensions of Shaft End(Spline Type)

MODEL	No. of teeth	Pitch circle dia(mm)	Module	Pressure angle	Standard
H10VO28LR	13	20.64	16/32	30°	SAE J498B

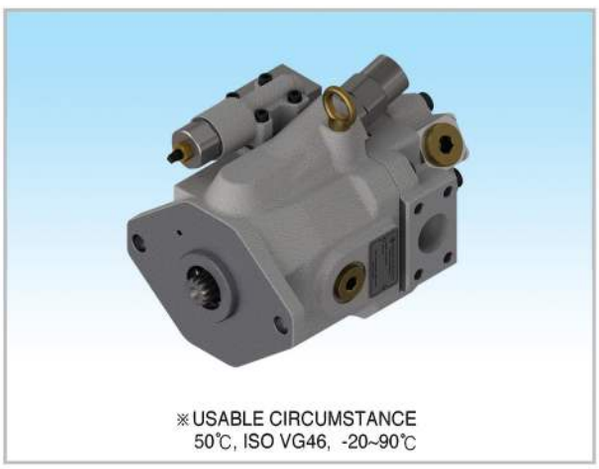

※USABLE CIRCUMSTANCE
50℃, ISO VG46, -20~90℃

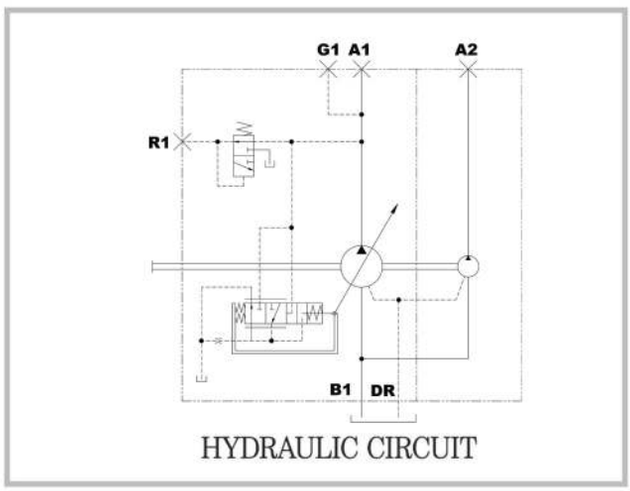

HYDRAULIC CIRCUIT

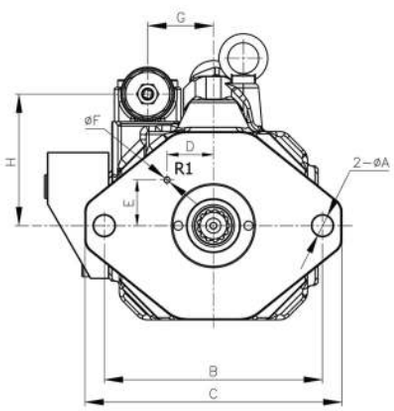

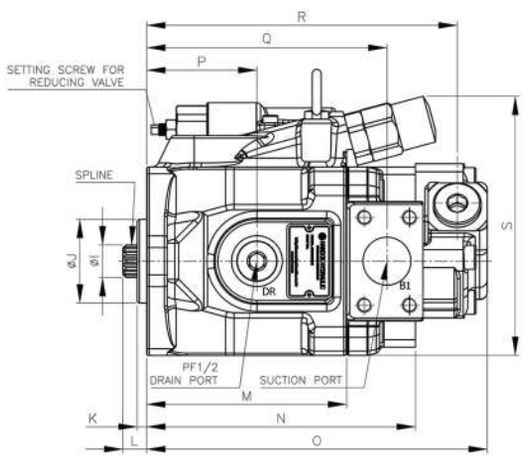

Flange Mounting face for Suction Port

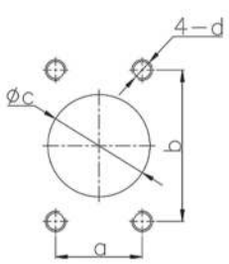

(mm)

a	30.2
b	58.7
c	32
d	M10x1.5P DP17

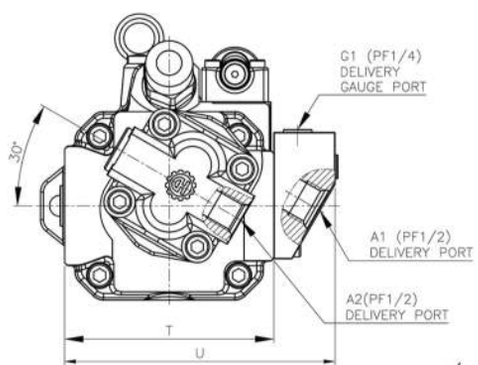

DIMENSIONS

(mm)

MODEL	A	B	C	D	E	F	G	H	I	J	K	L	M	N	O	P	Q	R	S	T	U
H10VO28LR	14	146	172	31	30.6	4	44	88	21.8	56	6.3	16	134	180	228	74	161	208	173	140	181

H10VD43 FOR SUMITOMO
SWASH PLATE TYPE PISTON PUMP

SPECIFICATIONS

MODEL	H10VD43 (For SUMITOMO)
Discharge Rate(cc/rev)	36 x 2
Max. Pressure (kg/cm²)	260
Max. Speed (rpm)	2,200

Dimensions of Shaft End(Spline Type)

MODEL	No. of teeth	Pitch circle dia(mm)	Module	Pressure angle	Standard
H10VD43 (For SUMITOMO)	15	23.813	16/32	30°	SAE J498B

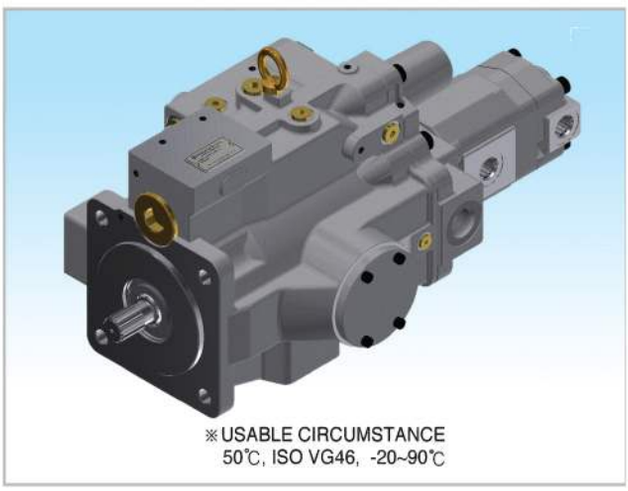

※USABLE CIRCUMSTANCE
50℃, ISO VG46, -20~90℃

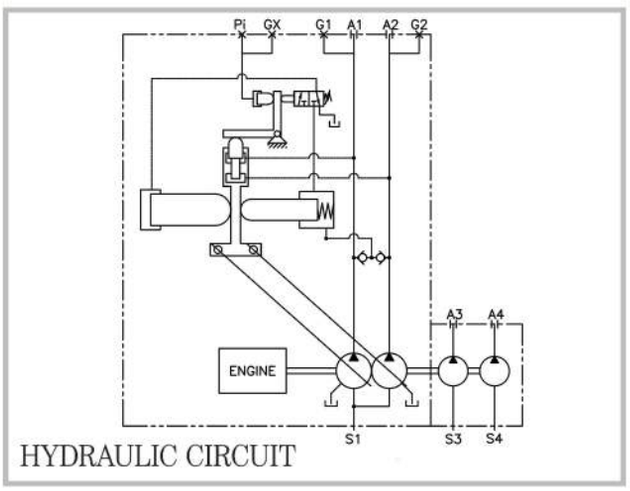

HYDRAULIC CIRCUIT

Flange Mounting face for Suction Port

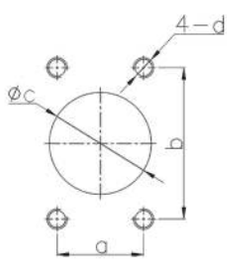

(mm)

a	42.9
b	77.8
c	51
d	M12x1.75P Dp18

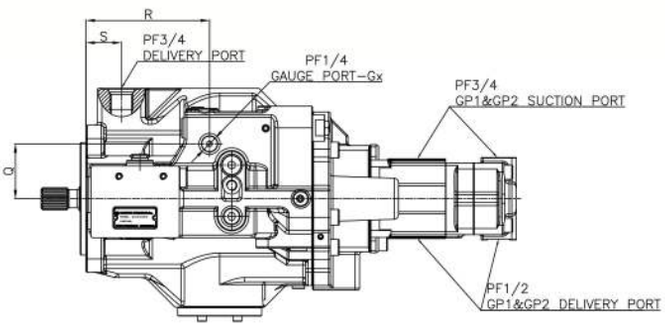

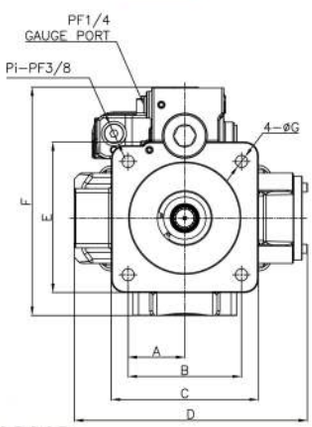

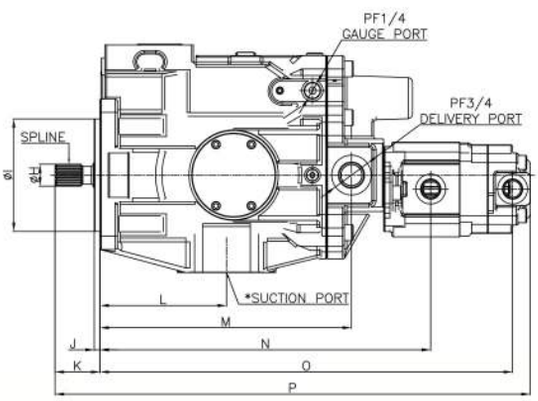

DIMENSIONS

(mm)

MODEL	A	B	C	D	E	F	G	H	I	J	K	L	M	N	O	P	Q	R	S
H10VD43 (For SUMITOMO)	64	128	166	263	170	258	14	24.8	127	6.5	50.7	143	284	373.5	466	537	62	139.5	40

H10VD43 FOR HITACHI
SWASH PLATE TYPE PISTON PUMP

SPECIFICATIONS

MODEL	H10VD43 (For HITACHI)
Discharge Rate(cc/rev)	36 x 2
Max. Pressure (kg/cm²)	260
Max. Speed (rpm)	2,200

Dimensions of Shaft End(Spline Type)

MODEL	No. of teeth	Pitch circle dia(mm)	Module	Pressure angle	Standard
H10VD43 (For HITACHI)	15	23.813	16/32	30°	SAE J498B

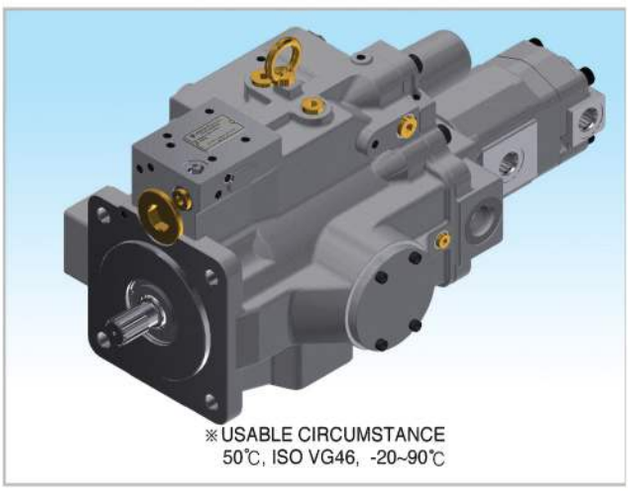

※USABLE CIRCUMSTANCE
50℃, ISO VG46, -20~90℃

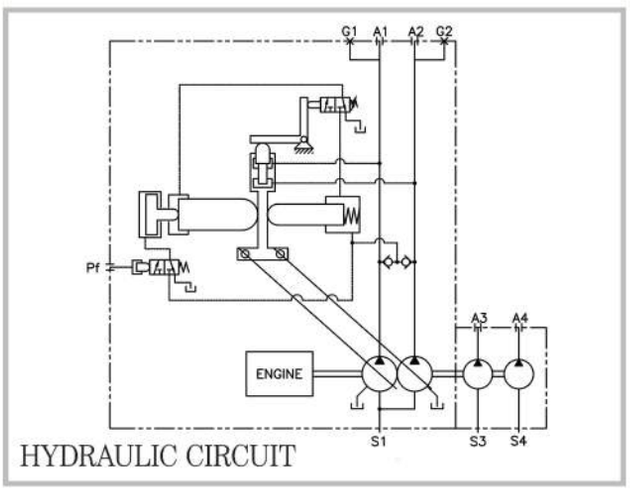

HYDRAULIC CIRCUIT

Flange Mounting face for Suction Port

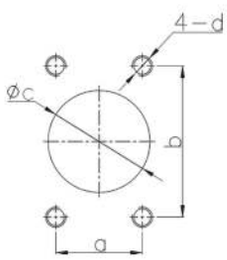

(mm)

a	42.9
b	77.8
c	51
d	M12x1.75P Dp18

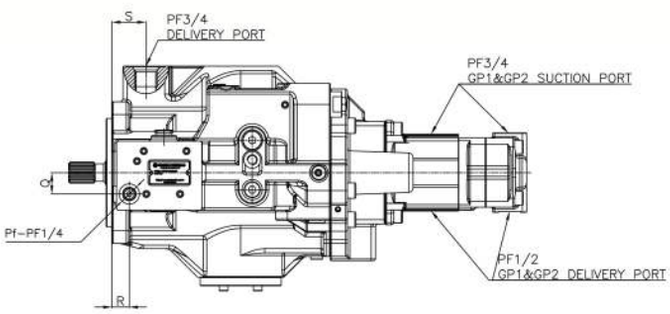

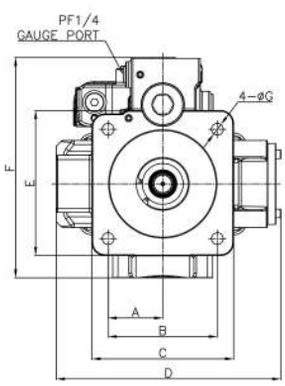

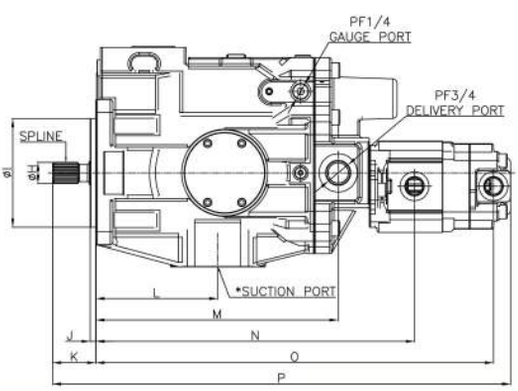

DIMENSIONS

(mm)

MODEL	A	B	C	D	E	F	G	H	I	J	K	L	M	N	O	P	Q	R	S
H10VD43 (For HITACHI)	64	128	166	263	170	258	14	24.8	127	6.5	50.7	143	284	373.5	466	537	25	20.5	40

H10VD43 FOR CATERPILLAR
SWASH PLATE TYPE PISTON PUMP

SPECIFICATIONS

MODEL	H10VD43 (For CATERPILLAR)
Discharge Rate(cc/rev)	36 x 2
Max. Pressure (kg/cm²)	260(320)
Max. Speed (rpm)	2,200

Dimensions of Shaft End(Spline Type)

MODEL	No. of teeth	Pitch circle dia(mm)	Module	Pressure angle	Standard
H10VD43 (For CATERPILLAR)	15	23.813	16/32	30°	SAE J498B

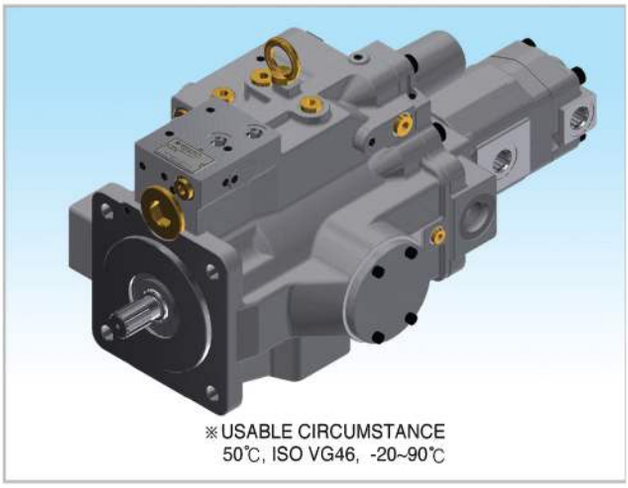

※USABLE CIRCUMSTANCE
50℃, ISO VG46, -20~90℃

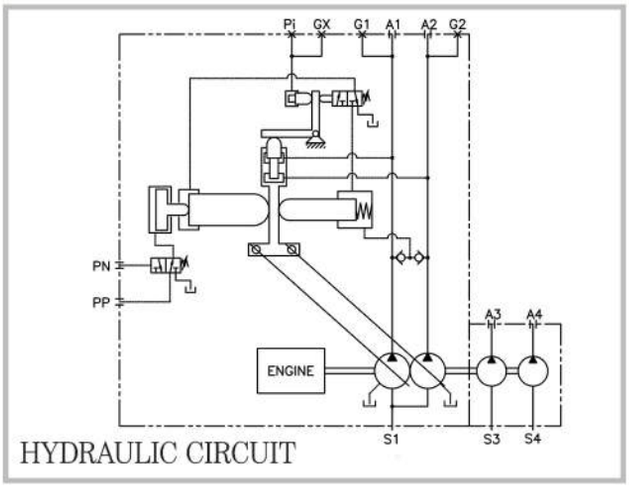

HYDRAULIC CIRCUIT

Flange Mounting face for Suction Port

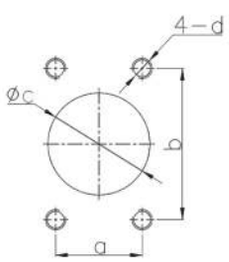

(mm)

a	42.9
b	77.8
c	51
d	M12x1.75P Dp18

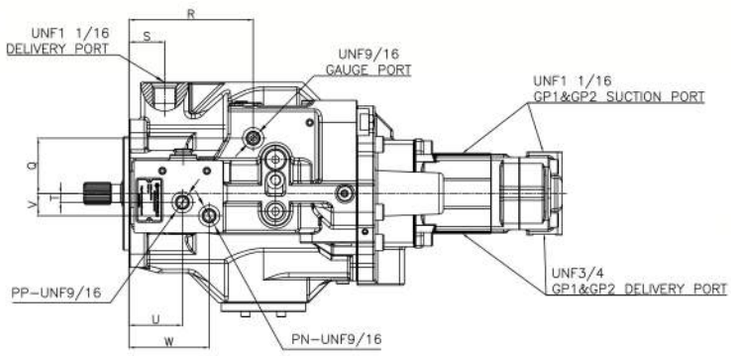

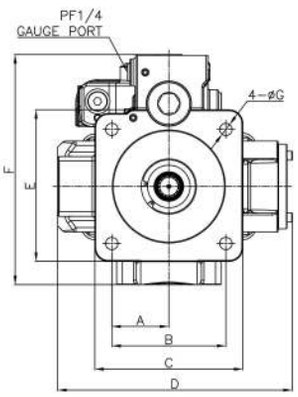

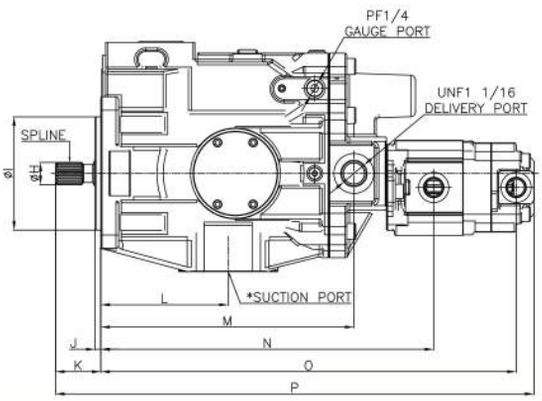

DIMENSIONS

(mm)

MODEL	A	B	C	D	E	F	G	H	I	J	K	L	M	N	O	P	Q	R	S	T	U	V	W
H10VD43 (For CATERPILLAR)	64	128	166	263	170	258	14	24.8	127	6.5	50.7	143	284	373.5	466	537	62	139.5	40	10	60	25	90

SPECIFICATIONS

MODEL	H3VL28
Discharge Rate(cc/rev)	28
Max. Pressure (kg/cm²)	340
Max. Speed (rpm)	3000



※USABLE CIRCUMSTANCE
50℃, ISO VG46, -20~90℃

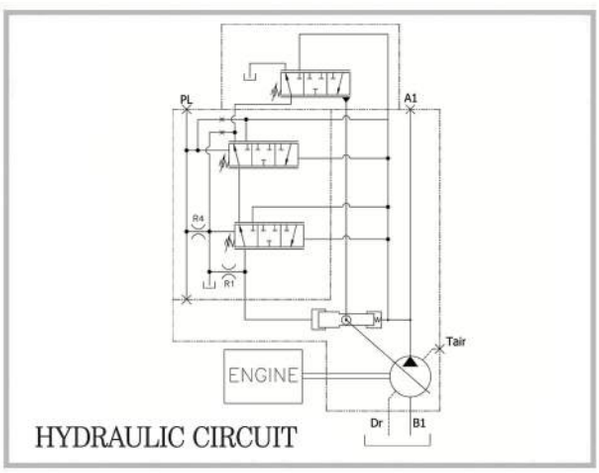

HYDRAULIC CIRCUIT

Dimensions of Shaft End(Spline Type)

MODEL	No. of teeth	Pitch Circle Dia(mm)	Moudle	Pressure Angle	Standard
H3VL28	13	20.64	16/32	30	SAE J498B

Dimensions of Shaft End(Key Type)

MODEL	a	b	c	d	e	f	Standard
H3VL28	22.2	24.9	28	6.3	9	41	SAE J744-22-1

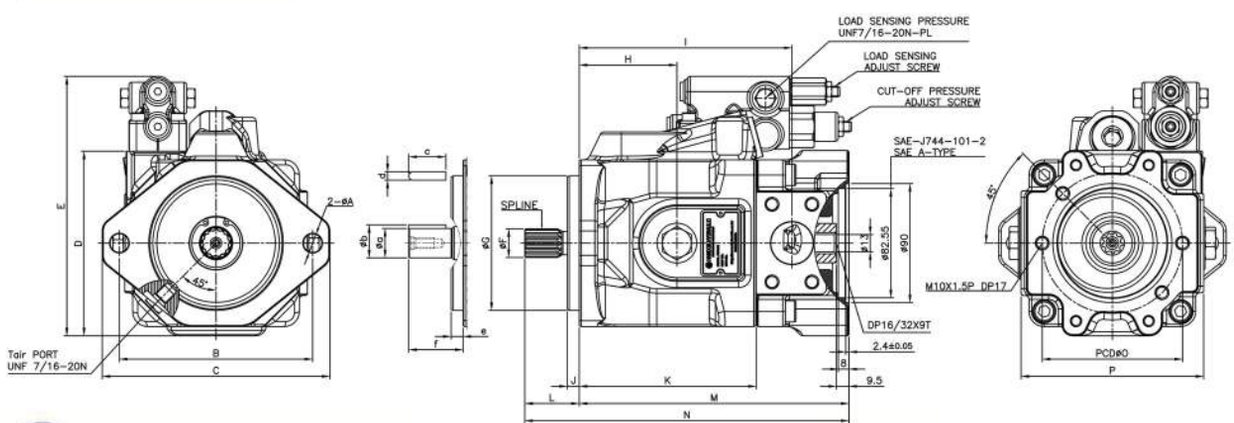

DIMENSIONS

(mm)

MODEL	A	B	C	D	E	F	G	H	I	J	K	L	M	N	O	P
H3VL28	14	146	172	139.5	196	21.7	101.6	74	161	9	134	41	204	245	106	138

SPECIFICATIONS (FOR LC00 TYPE)

MODEL	H3VL63	H3VL80
Discharge Rate(cc/rev)	63	80
Max. Pressure (kg/cm²)	280	350
Max. Speed (rpm)	2400	



※USABLE CIRCUMSTANCE
50℃, ISO VG46, -20~90℃

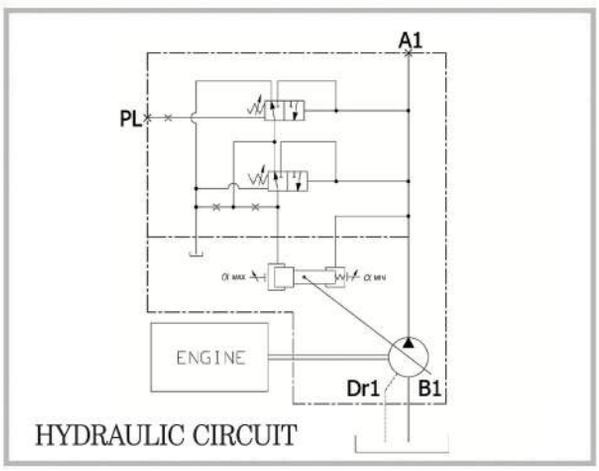

HYDRAULIC CIRCUIT

Dimensions of Shaft End(Key Type)

MODEL	a	b	c	d	e	f	Standard
H3VL63/80 (SAE KEY)	31.75	35.2	44	7.94	12.7	56	SAE J744-32-1
H3VL63/80 (ISO KEY)	32	35	50	10	9	68	ISO 3019/2-G32N

Dimensions of Shaft End(Spline Type)

MODEL	No. of teeth	Pitch Circle Dia(mm)	Module	Pressure Angle	Standard
H3VL63/80	14	29.63	12/24	30°	SAE J744-32-4
H3VL63/80	12	30	2.5	20°	JIS B 1603 : 1995

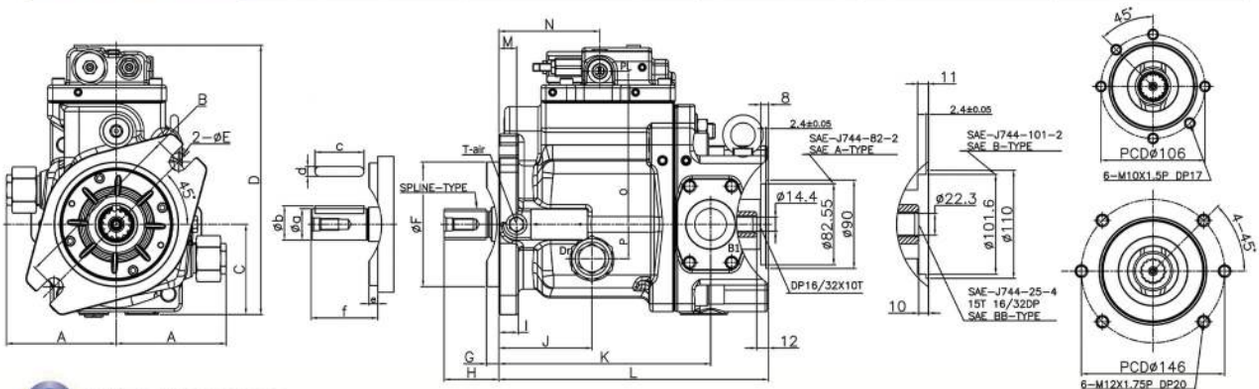

DIMENSIONS

(mm)

MODEL	A	B	C	D	E	F	G	H	I	J	K	L	M	N	O	P
H3VL63/80	112	180	92	275	18.5	127	12.7	56	20	95	216	275	18	103	156	35

SPECIFICATIONS (FOR 3E00 TYPE)

MODEL	H3VL63	H3VL80
Discharge Rate(cc/rev)	63	80
Max. Pressure (kg/cm²)	280	350
Max. Speed (rpm)	2400	

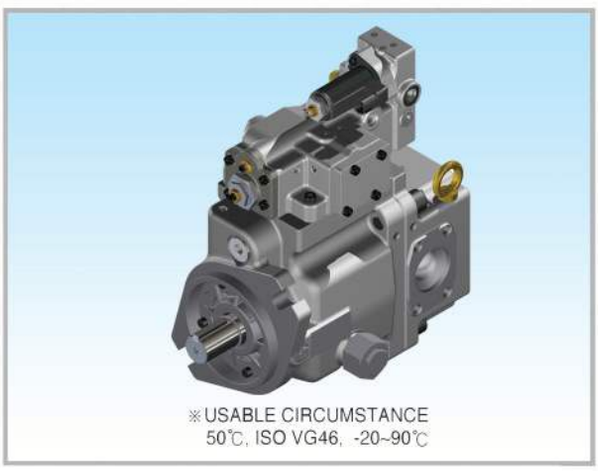

※USABLE CIRCUMSTANCE
50℃, ISO VG46, -20~90℃

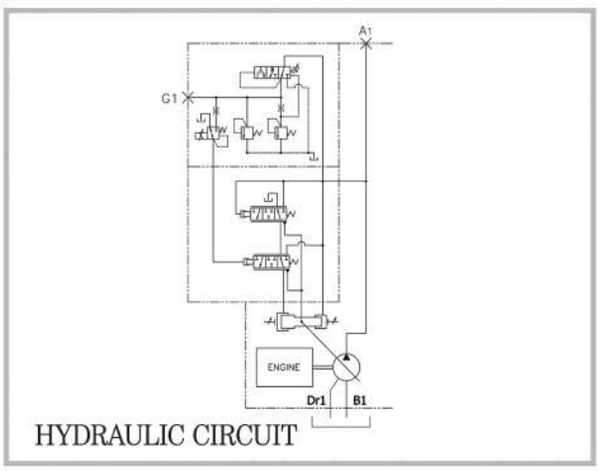

HYDRAULIC CIRCUIT

Dimensions of Shaft End(Key Type)

MODEL	a	b	c	d	e	f	Standard
H3VL63/80 (SAE KEY)	31.75	35.2	44	7.94	12.7	56	SAE J744-32-1
H3VL63/80 (ISO KEY)	32	35	50	10	9	68	ISO 3019/2-G32N

Dimensions of Shaft End(Spline Type)

MODEL	No. of teeth	Pitch Circle Dia(mm)	Module	Pressure Angle	Standard
H3VL63/80	14	29.63	12/24	30°	SAE J744-32-4
H3VL63/80	12	30	2.5	20°	JIS B 1603 : 1995

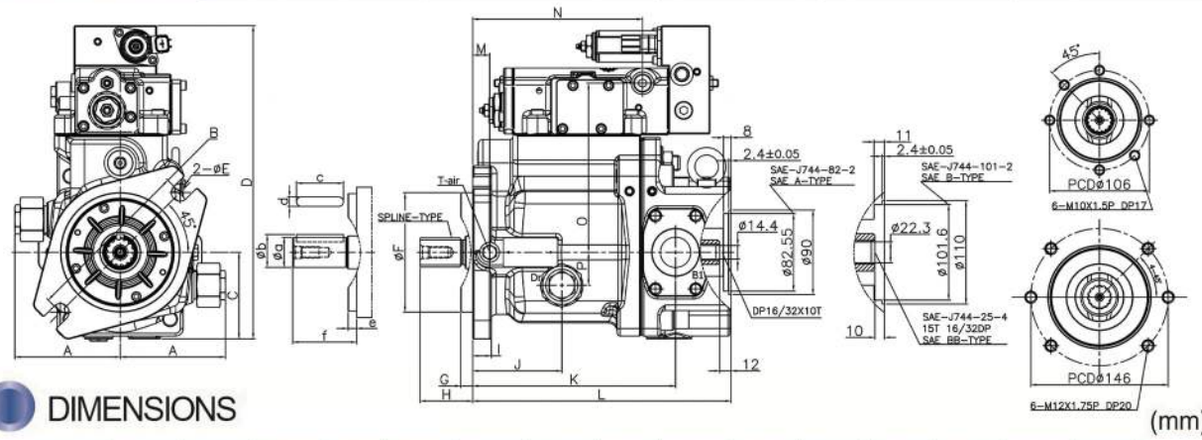

DIMENSIONS

(mm)

MODEL	A	B	C	D	E	F	G	H	I	J	K	L	M	N	O	P
H3VL63/80	112	180	92	275	18.5	127	12.7	56	20	95	216	275	18	103	156	35

SPECIFICATIONS (FOR 5N00 / 6N00 TYPE)

MODEL	H3VL63	H3VL80
Discharge Rate(cc/rev)	63	80
Max. Pressure (kg/cm²)	280	350
Max. Speed (rpm)	2400	



※USABLE CIRCUMSTANCE
50℃, ISO VG46, -20~90℃

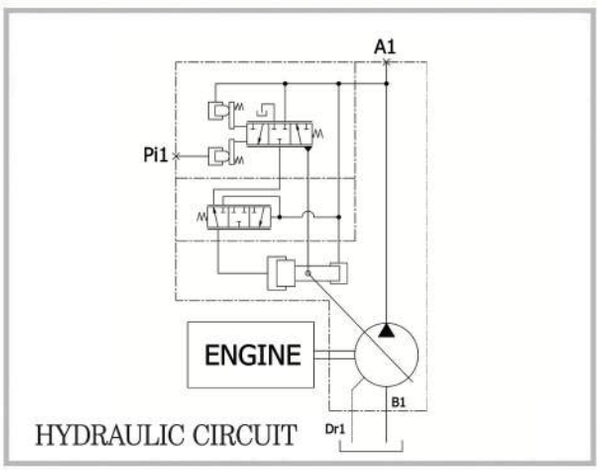

Dimensions of Shaft End(Key Type)

MODEL	a	b	c	d	e	f	Standard
H3VL63/80 (SAE KEY)	31.75	35.2	44	7.94	12.7	56	SAE J744-32-1
H3VL63/80 (ISO KEY)	32	35	50	10	9	68	ISO 3019/2-G32N

Dimensions of Shaft End(Spline Type)

MODEL	No. of teeth	Pitch Circle Dia(mm)	Module	Pressure Angle	Standard
H3VL63/80	14	29.63	12/24	30°	SAE J744-32-4
H3VL63/80	12	30	2.5	20°	JIS B 1603 : 1995

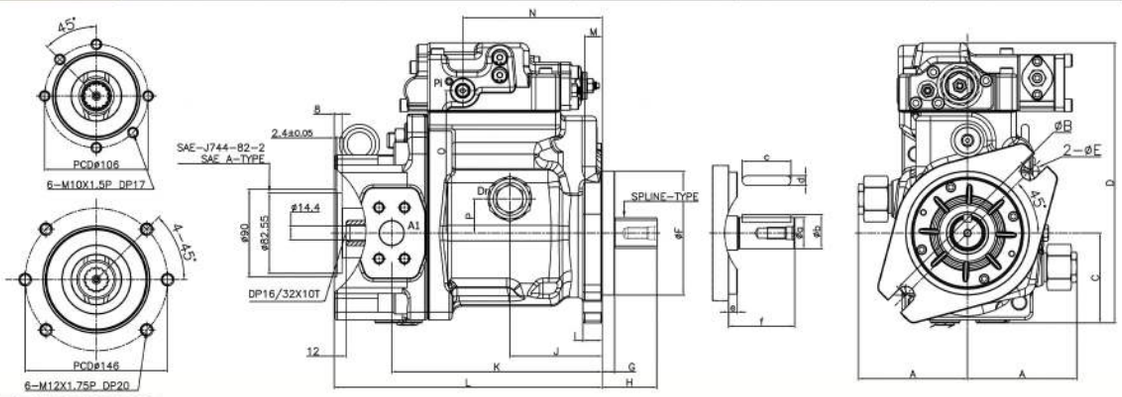

DIMENSIONS

(mm)

MODEL	A	B	C	D	E	F	G	H	I	J	K	L	M	N	O	P
H3VL63/80	112	180	92	275	18.5	127	12.7	56	20	95	216	275	18	103	156	35

SPECIFICATIONS (FOR 5L00 TYPE)

MODEL	H3VL63	H3VL80
Discharge Rate(cc/rev)	63	80
Max. Pressure (kg/cm²)	280	350
Max. Speed (rpm)	2400	

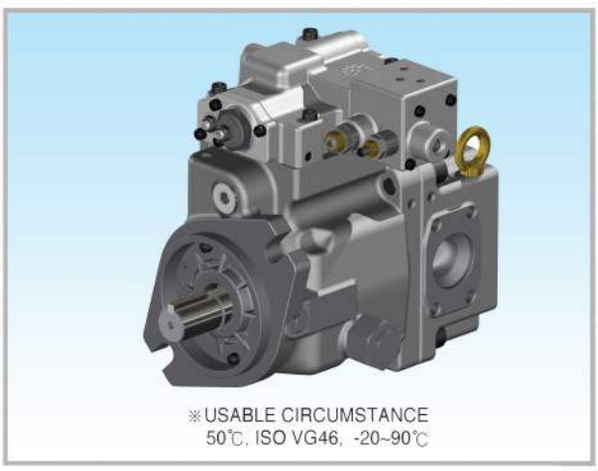

※USABLE CIRCUMSTANCE
50℃, ISO VG46, -20~90℃

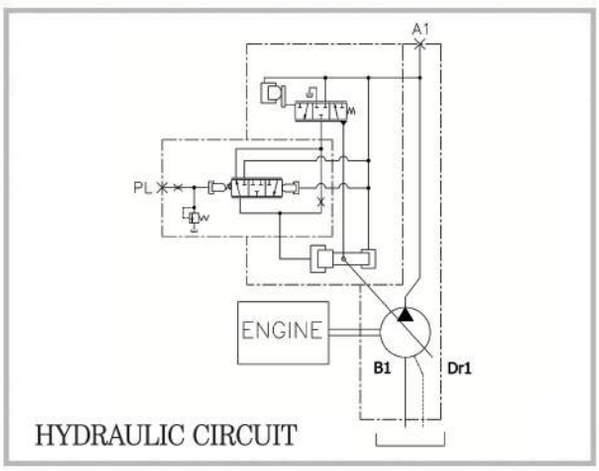

HYDRAULIC CIRCUIT

Dimensions of Shaft End(Key Type)

MODEL	a	b	c	d	e	f	Standard
H3VL63/80 (SAE KEY)	31.75	35.2	44	7.94	12.7	56	SAE J744-32-1
H3VL63/80 (ISO KEY)	32	35	50	10	9	68	ISO 3019/2-G32N

Dimensions of Shaft End(Spline Type)

MODEL	No. of teeth	Pitch Circle Dia(mm)	Module	Pressure Angle	Standard
H3VL63/80	14	29.63	12/24	30°	SAE J744-32-4
H3VL63/80	12	30	2.5	20°	JIS B 1603 : 1995

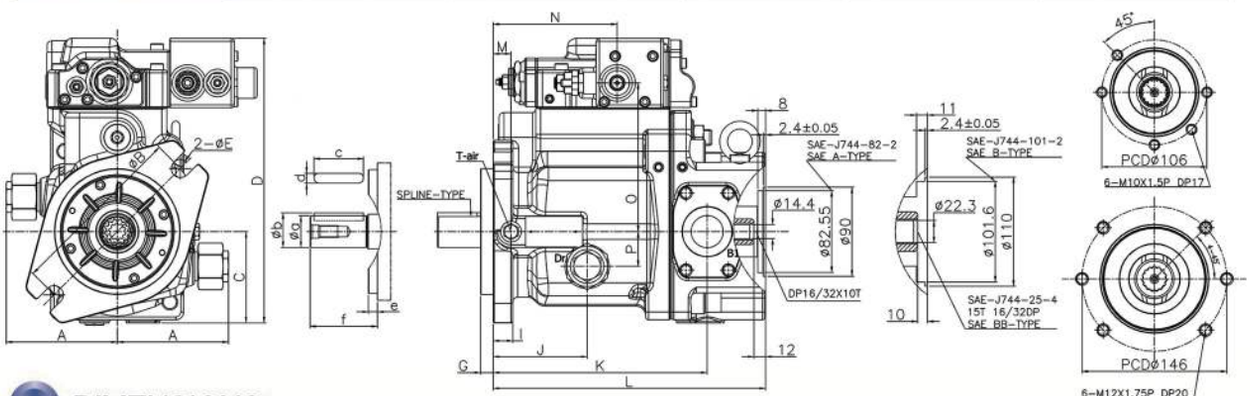

DIMENSIONS

(mm)

MODEL	A	B	C	D	E	F	G	H	I	J	K	L	M	N	O	P
H3VL63/80	112	180	92	275	18.5	127	12.7	56	20	95	216	275	18	103	156	35

H3VL80 FOR SANY
SWASH PLATE TYPE PISTON PUMP

SPECIFICATIONS

MODEL	H3VL80 (FOR SANY)
Discharge Rate(cc/rev)	80
Max. Pressure (kg/cm²)	350
Max. Speed (rpm)	2400



※USABLE CIRCUMSTANCE
50℃, ISO VG46, -20~90℃

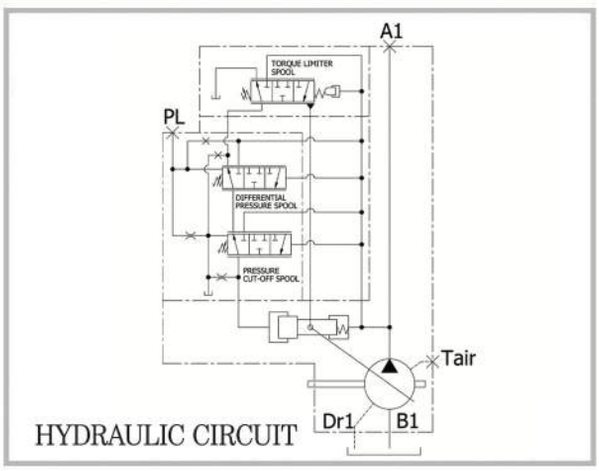

HYDRAULIC CIRCUIT

Dimensions of Shaft End(Key Type)

MODEL	a	b	c	d	e	f	Standard
H3VL80	31.75	35.2	44	7.94	12.7	56	SAE J744-32-1
	32	35	50	10	9	68	ISO 3019/2-G32N

Dimensions of Shaft End(Spline Type)

MODEL	No. of teeth	Pitch circle dia(mm)	Module	Pressure angle	Standard
H3VL80	14	29.63	12/24	30°	SAE J744-32-4
	12	30	2.5	20°	JIS B 1603 : 1995

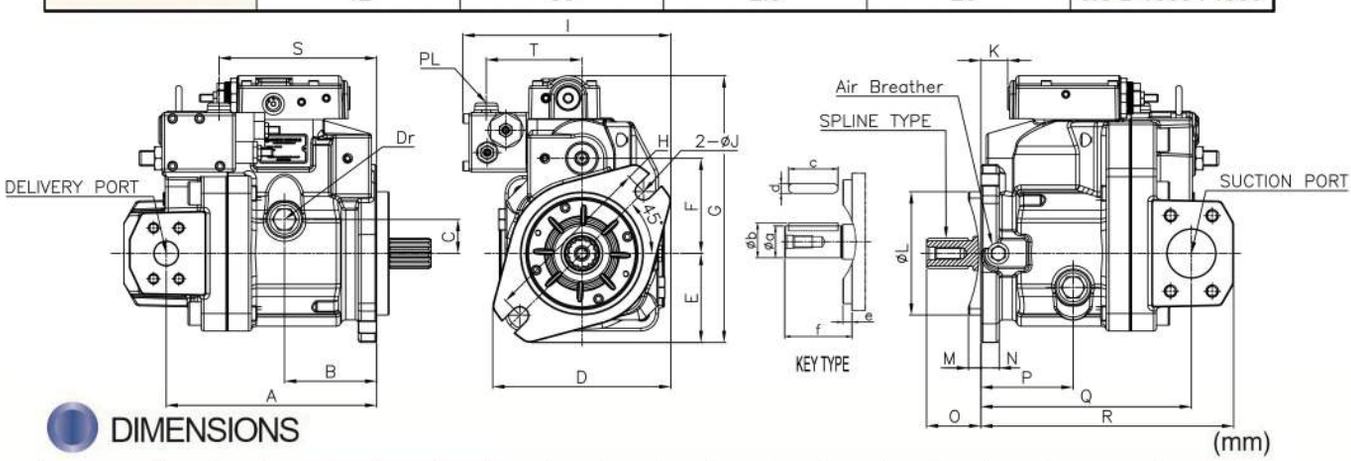

DIMENSIONS

(mm)

MODEL	A	B	C	D	E	F	G	H	I	J	K	L	M	N	O	P	Q	R	S	T
H3VL80 (FOR SANY)	217	95	35	184	92	98	275	180	214	17.5	27.7	127	12.7	19	56	95	217	260.5	162.5	98.5

H3VL45/80
SWASH PLATE TYPE PISTON PUMP

SPECIFICATIONS

MODEL	H3VL45	H3VL80
Discharge Rate(cc/rev)	45	
Max. Pressure (kg/cm²)	350	
Max. Speed (rpm)	2400	



※USABLE CIRCUMSTANCE
50℃, ISO VG46, -20~90℃

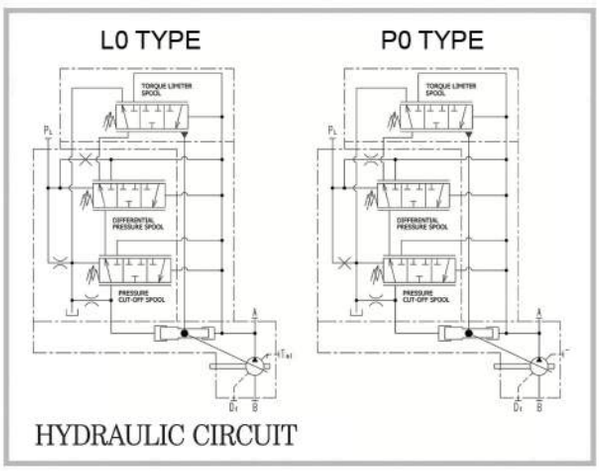

HYDRAULIC CIRCUIT

Dimensions of Shaft End(Key Type)

MODEL	a	b	c	d	e	f	Standard
H3VL45	25	28	36	8	9.7	53	SAE J744-25-1
H3VL80	31.75	35.2	44	7.94	12.7	56	SAE J744-32-1
	32	35	50	10	9	68	ISO 3019/2-G32N

Dimensions of Shaft End(Spline Type)

MODEL	No. of teeth	Pitch circle dia(mm)	Module	Pressure angle	Standard
H3VL45	15	24.981	16/32	30°	SAE J744-25-4
H3VL80	14	29.63	12/24	30°	SAE J744-32-4
	12	30	2.5	20°	JIS B 1603 : 1995

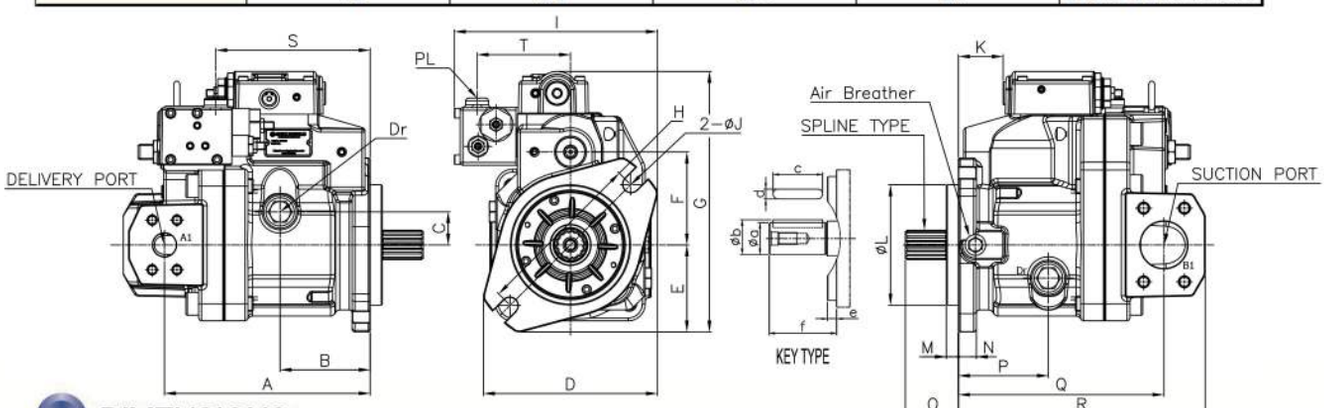

DIMENSIONS

(mm)

MODEL	A	B	C	D	E	F	G	H	I	J	K	L	M	N	O	P	Q	R	S	T
H3VL45	184	91	33	146	87	73	217	146	196	14.3	44.7	100	9	13	46	91	184	250	154.0	93
H3VL80	217	95	35	184	92	98	275	180	214	17.5	47.2	127	12.7	19	56	95	217	260.5	162.5	98.5

H3V112/140
SWASH PLATE TYPE PISTON PUMPS

SPECIFICATIONS(FOR 5L00 TYPE)

MODEL	H3VL112	H3VL140
Discharge Rate (cc/rev)	112	140
Max. Pressure (kg/cm²)	350	
Max. Speed (rpm)	2700	2500

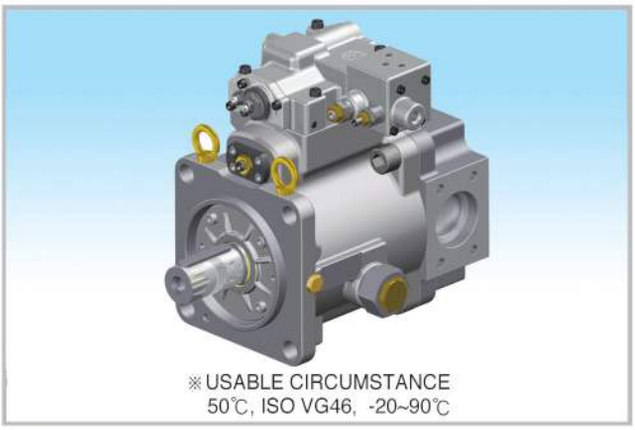

※USABLE CIRCUMSTANCE
50℃, ISO VG46, -20~90℃

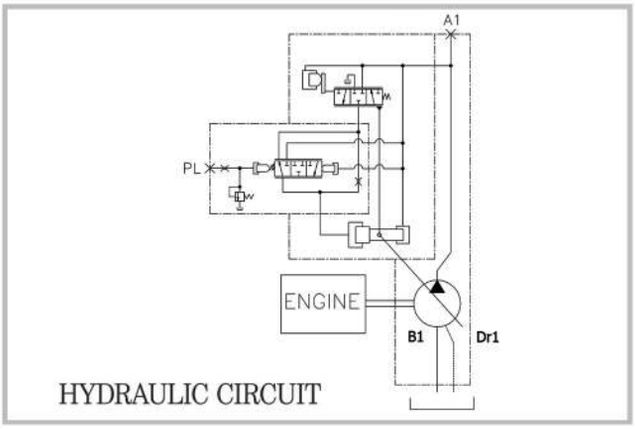

HYDRAULIC CIRCUIT

Dimensions of Shaft End(Spline Type)

MODEL	No. of teeth	Pitch Circle Dia(mm)	Module	Pressure Angle	Standard
H3VL112 / 140	13	41.275	8/16	30°	SAE J744-44-4

Dimensions of Shaft End(Key Type)

MODEL	a	b	c	d	e	f	Standard
H3VL112 / 140	45	48.5	80	14	12.5	92	ISO 3019/2
H3VL112 / 140	44.45	49.3	63	11.11		75	SAE J744-44-1

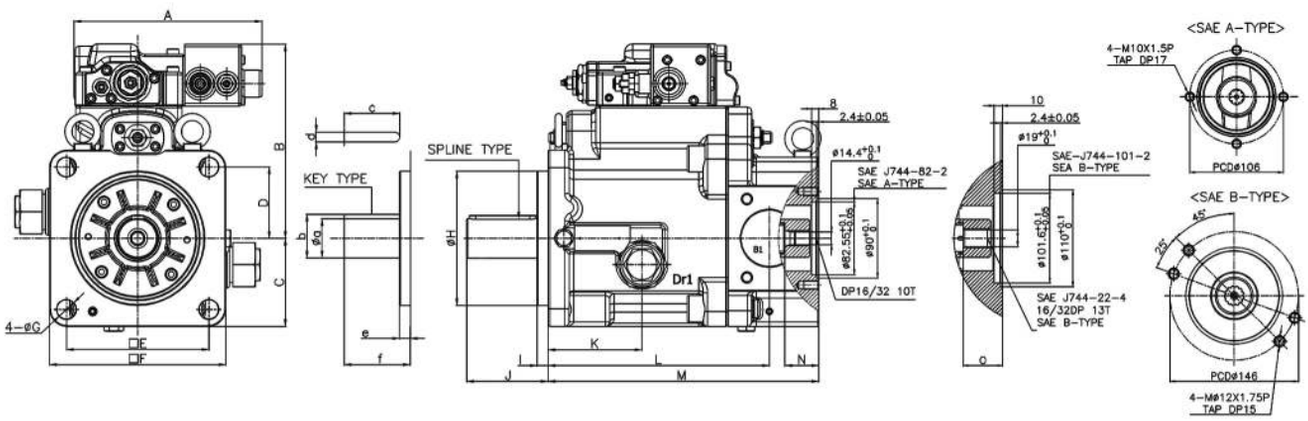

DIMENSIONS

(mm)

MODEL	A	B	C	D	E	F	G	H	I	J	K	L	M	N	O
H3VL112 / 140	213	220	100	114	161.6	200	22	152.4	12.5	92	106.5	251	307	38	45

H3VL112/140
SWASH PLATE TYPE PISTON PUMPS

SPECIFICATIONS(FOR 3L09 TYPE)

MODEL	H3VL112	H3VL140
Discharge Rate (cc/rev)	112	140
Max. Pressure (kg/cm²)	350	
Max. Speed (rpm)	2700	2500

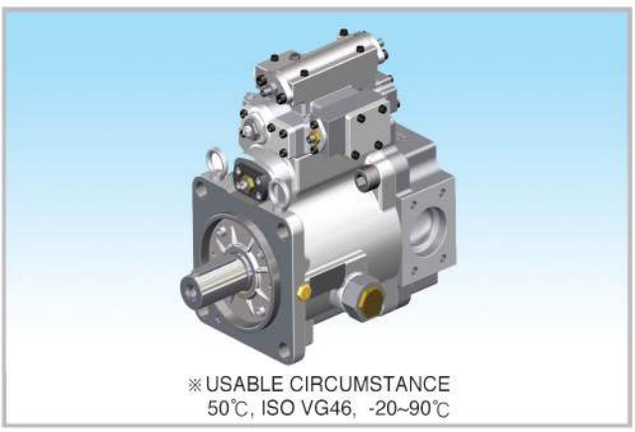

※USABLE CIRCUMSTANCE
50℃, ISO VG46, -20~90℃

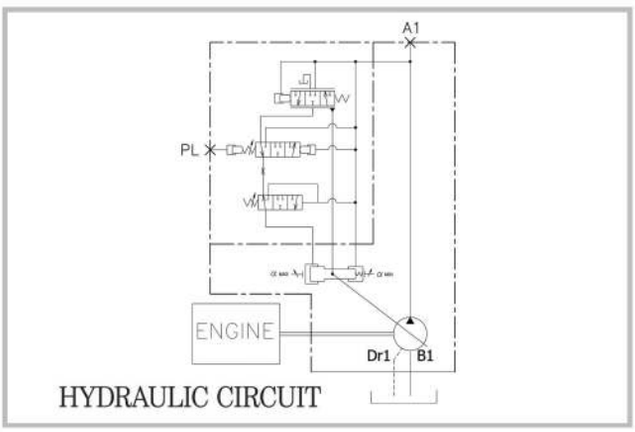

HYDRAULIC CIRCUIT

Dimensions of Shaft End(Spline Type)

MODEL	No. of teeth	Pitch Circle Dia(mm)	Module	Pressure Angle	Standard
H3VL112 / 140	13	41.275	8/16	30°	SAE J744-44-4

Dimensions of Shaft End(Key Type)

MODEL	a	b	c	d	e	f	Standard
H3VL112 / 140	45	48.5	80	14	12.5	92	ISO 3019/2
H3VL112 / 140	44.45	49.3	63	11.11		75	SAE J744-44-1

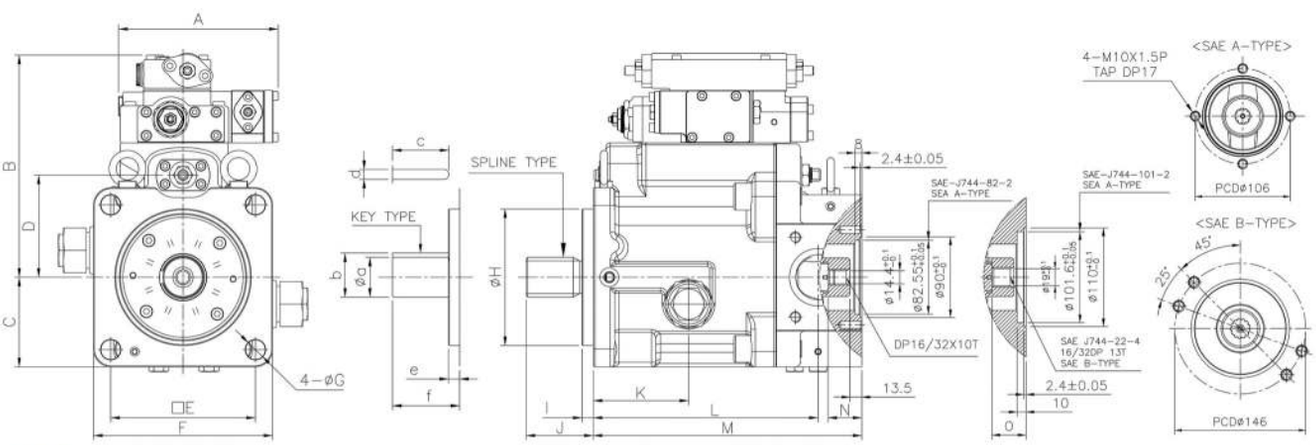

DIMENSIONS

(mm)

MODEL	A	B	C	D	E	F	G	H	I	J	K	L	M	N	O
H3VL112 / 140	178	247.5	100	114	161.6	200	22	152.4	12.5	75	106.5	251	307	38	45

H3VL112/140
SWASH PLATE TYPE PISTON PUMPS

SPECIFICATIONS(FOR 5N00 / 6N00 TYPE)

MODEL	H3VL112	H3VL140
Discharge Rate (cc/rev)	112	140
Max. Pressure (kg/cm²)	350	
Max. Speed (rpm)	2700	2500

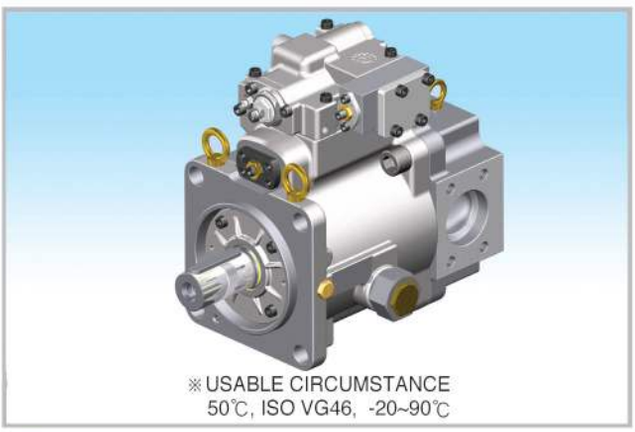

※USABLE CIRCUMSTANCE
50℃, ISO VG46, -20~90℃

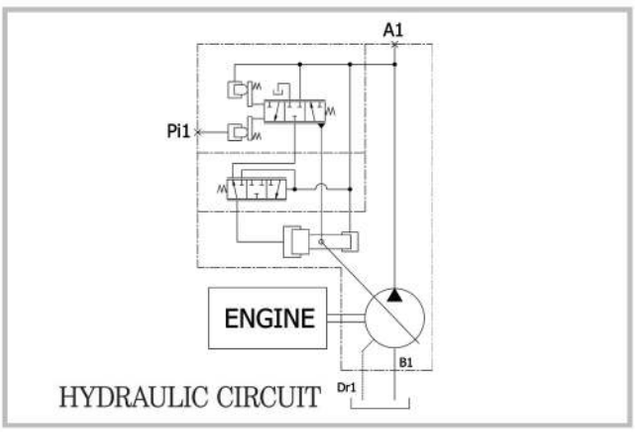

HYDRAULIC CIRCUIT

Dimensions of Shaft End(Spline Type)

MODEL	No. of teeth	Pitch Circle Dia(mm)	Module	Pressure Angle	Standard
H3VL112 / 140	13	41.275	8/16	30°	SAE J744-44-4

Dimensions of Shaft End(Key Type)

MODEL	a	b	c	d	e	f	Standard
H3VL112 / 140	45	48.5	80	14	12.5	92	ISO 3019/2
H3VL112 / 140	44.45	49.3	63	11.11		75	SAE J744-44-1

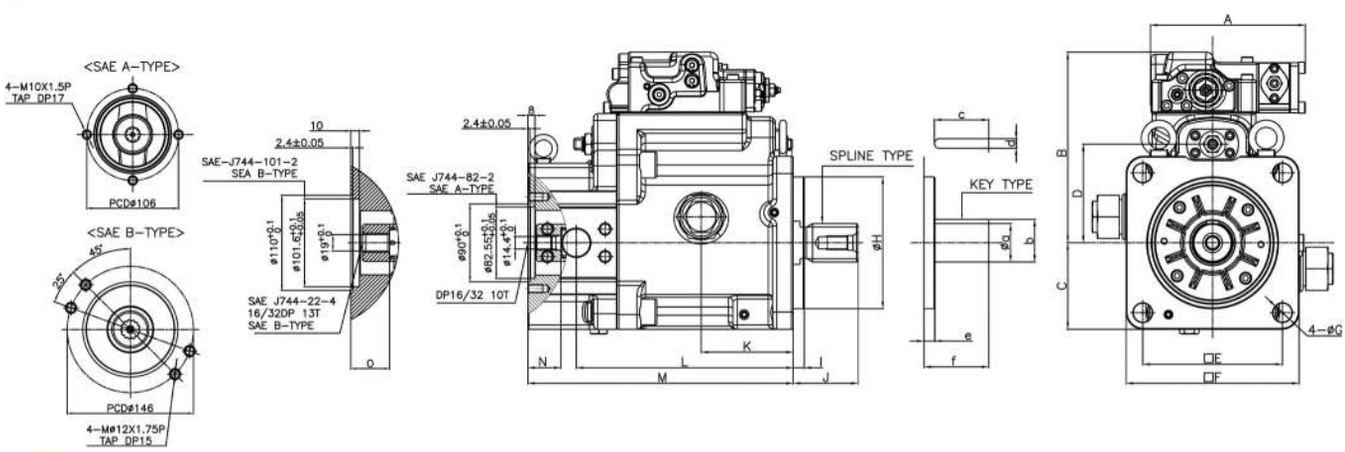

DIMENSIONS

(mm)

MODEL	A	B	C	D	E	F	G	H	I	J	K	L	M	N	O
H3VL112 / 140	178	220	100	114	161.6	200	22	152.4	12.5	75	106.5	251	307	38	45

H3V63S/H5V80S FOR HITACHI
SWASH PLATE TYPE PISTON PUMPS

SPECIFICATIONS (FOR 1F29 TYPE)

MODEL	H3V63S	H5V80S
Discharge Rate(cc/rev)	63	80
Max. Pressure (kg/cm²)	350	
Max. Speed (rpm)	2150	

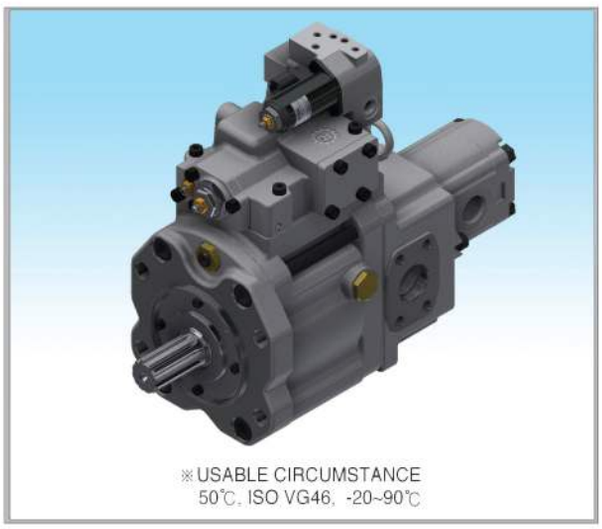

※USABLE CIRCUMSTANCE
50℃, ISO VG46, -20~90℃

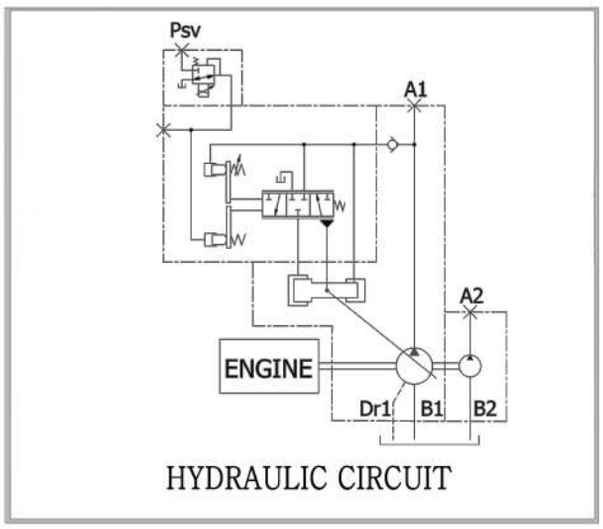

HYDRAULIC CIRCUIT

Dimensions of Shaft End(Spline Type)

MODEL	No. of teeth	Pitch circle dia(mm)	Module	Pressure angle	Standard
H3V63S/H5V80S (For 1F29)	14	29.6	12 / 24	30°	SAE J744

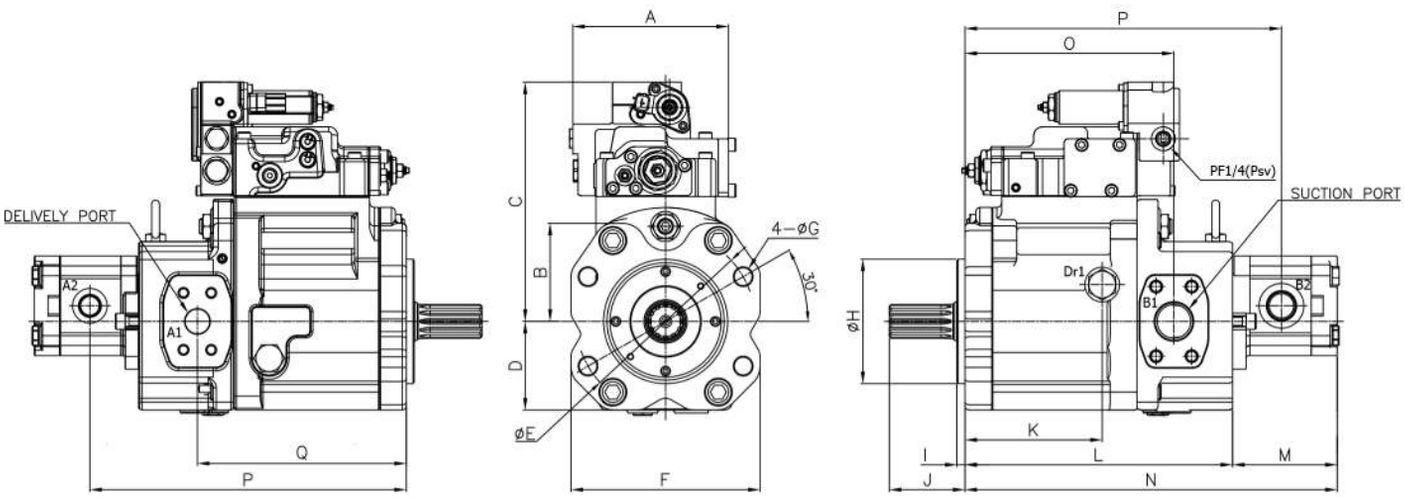

DIMENSIONS

(mm)

MODEL	A	B	C	D	E	F	G	H	I	J	K	L	M	N	O	P	Q
H3V63S/ H5V80S (For 1F29)	156	95	240	89	180	190	18	125	8	76	138	269	105	374	82.5	318	210

H3V/H5VSHR SERIES
SWASH PLATE TYPE PISTON PUMPS

SPECIFICATIONS (FOR 2N00 / 2P00 TYPE)

MODEL	H3V140SHR	H3V180SHR	H5V200SHR	H3V280SHR
Discharge Rate(cc/rev)	140	180	200	280
Max. Pressure (kg/cm²)	350			
Max. Speed (rpm)	2150	2150	1900	1600
DIRECTION	CW(R)			



※USABLE CIRCUMSTANCE
50℃, ISO VG46, -20~90℃

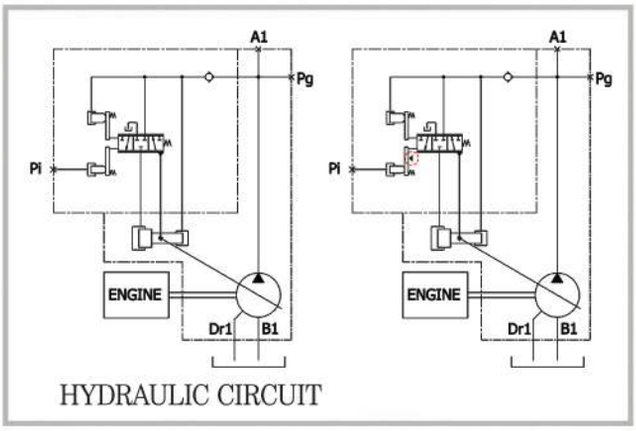

HYDRAULIC CIRCUIT

Dimensions of Shaft End(Spline Type)

MODEL	No. of teeth	Pitch circle dia(mm)	Module	Pressure angle	Standard
H3V140/180SHR H5V200SHR	17	42.5	2.5	20°	JIS B 1603:1995
H3V280SHR	18	54	3	20°	JIS B 1603:1995

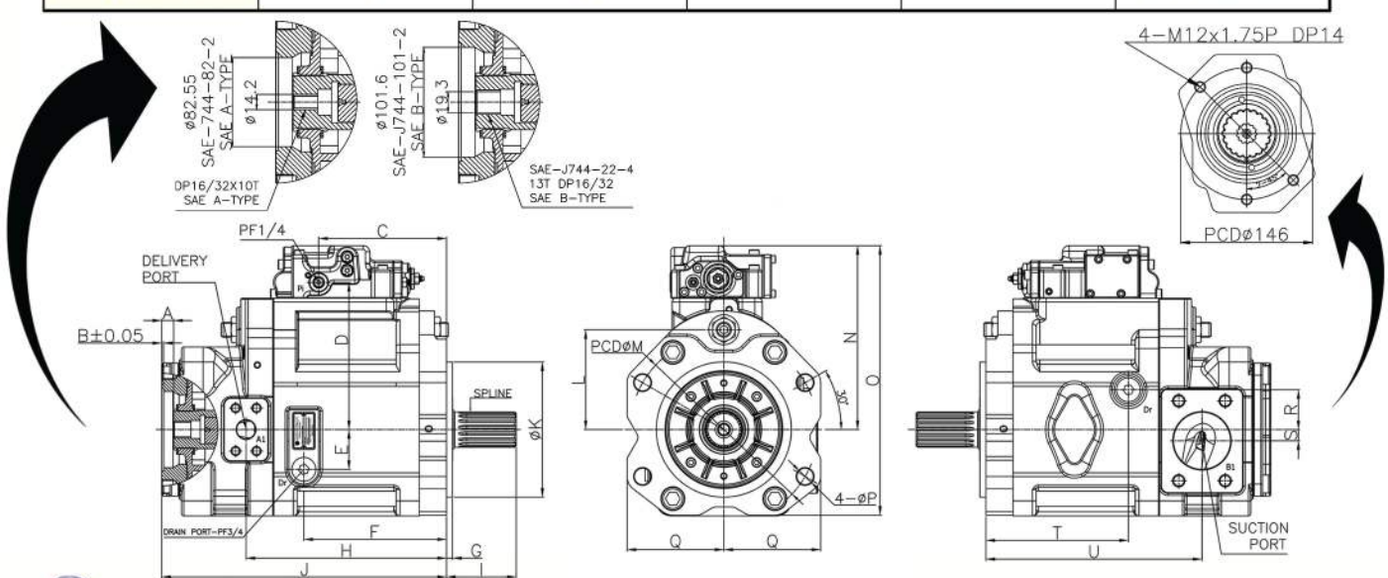

DIMENSIONS

(mm)

MODEL	A	B	C	D	E	F	G	H	I	J	K	L	M	N	O	P	Q	R	S	T	U
H3V140/180SHR H5V200SHR	16	2.4	170	196	53	190	8	267	93	379.5	180	133	250	245	359	22	129	53	15	190	288
H3V280SHR			199	236	68	166	9	330	115.2	450.5	200	158	300.2	285	415	26	151	68		203	356

H3V/H5VSHL SERIES
SWASH PLATE TYPE PISTON PUMP

SPECIFICATIONS (FOR 2N00 / 2P00 TYPE)

MODEL	H3V140SHL	H3V180SHL	H5V200SHL	H3V280SHL
Discharge Rate(cc/rev)	140	180	200	280
Max. Pressure (kg/cm²)	350			
Max. Speed (rpm)	2150	2150	1900	1600
DIRECTION	CCW(L)			



※USABLE CIRCUMSTANCE
50℃, ISO VG46, -20~90℃

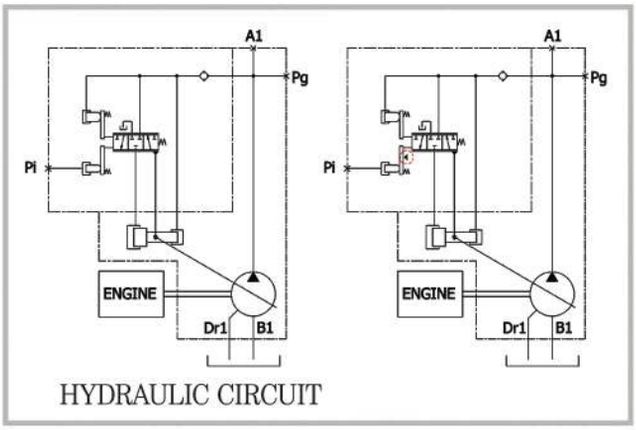

HYDRAULIC CIRCUIT

Dimensions of Shaft End(Spline Type)

MODEL	No. of teeth	Pitch circle dia(mm)	Module	Pressure angle	Standard
H3V140/180SHL H5V200SHL	17	42.5	2.5	20°	JIS B 1603:1995
H3V280SHL	18	54	3	20°	JIS B 1603:1995

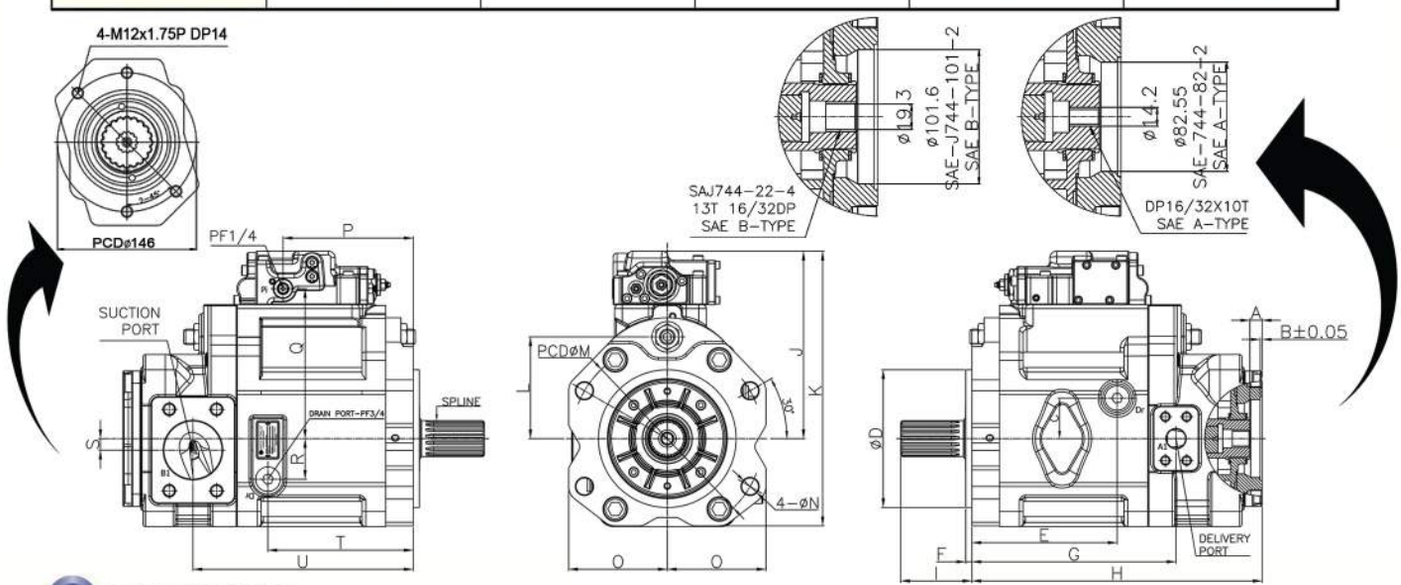

DIMENSIONS

(mm)

MODEL	A	B	C	D	E	F	G	H	I	J	K	L	M	N	O	P	Q	R	S	T	U
H3V140/180SHL H5V200SHL	16	2.4	53	180	190	8	267	379.5	93	245	359	133	250	22	129	170	196	53	15	190	288
H3V280SHL			68	200	203	9	330	450.5	115.2	285	415	158	300.2	26	151	199	236	68		166	356

H3V280SH FOR HITACHI SENSOR TYPE SWASH PLATE TYPE PISTON PUMPS

SPECIFICATIONS (FOR OE01-HITACHI TYPE)

MODEL	H3V280SH(OE01 – HITACHI TYPE)
Discharge Rate (cc/rev)	280
Max. Pressure (kg/cm²)	350
Max. Speed (rpm)	1500

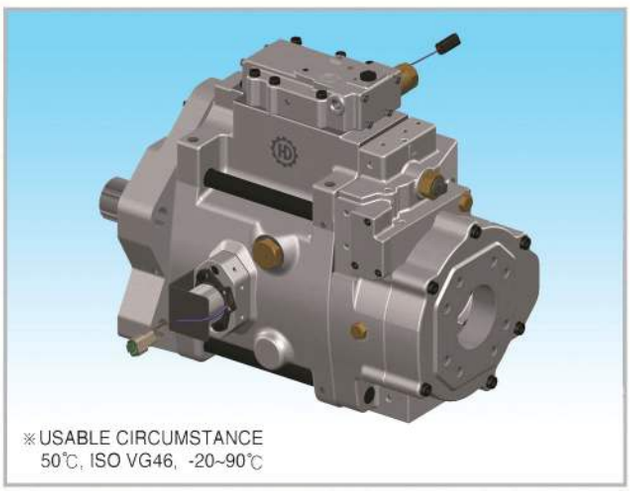

※USABLE CIRCUMSTANCE
50℃, ISO VG46, -20~90℃

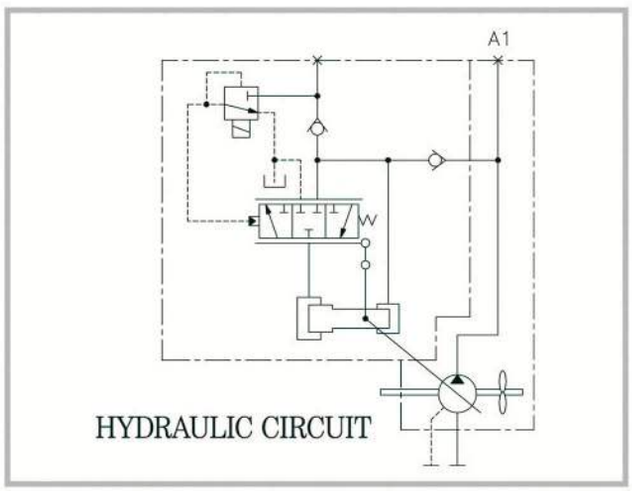

Dimensions of Shaft End(Spline Type)

MODEL	No. of teeth	Pitch Circle Dia(mm)	Module	Pressure Angle	Standard
H3V280SH (OE01– HITACHI TYPE)	16	48	3.0	20°	JIS B 1603 : 1995

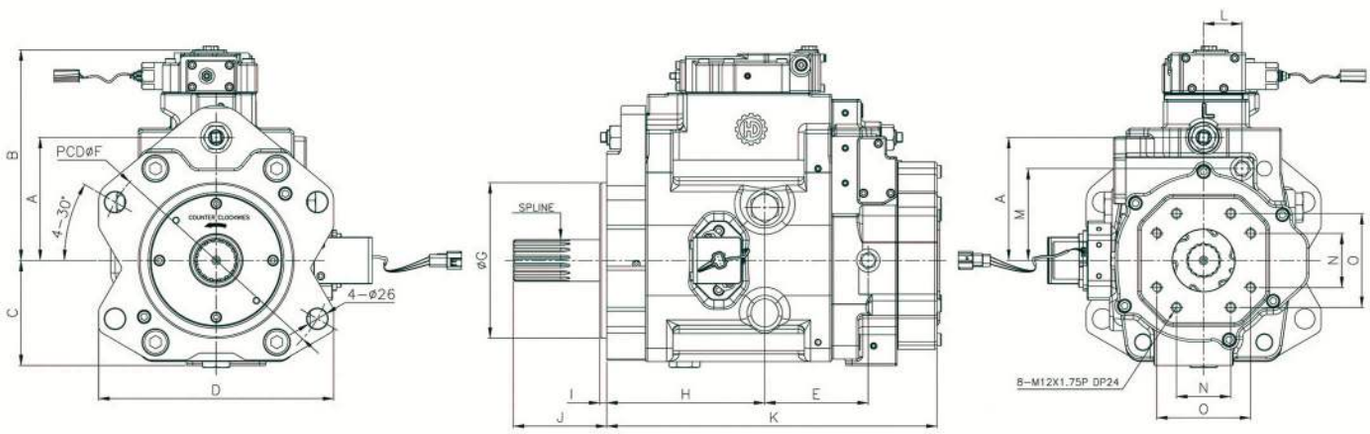

DIMENSIONS

(mm)

MODEL	A	B	C	D	E	F	G	H	I	J	K	L	M	N	O
H3V280SH (OE01– HITACHI TYPE)	158	270	135	302	133	300	200	203	9	120	424.5	49.5	118	69.8	120.7

H3V280SH FOR HITACHI NORMAL TYPE SWASH PLATE TYPE PISTON PUMP

SPECIFICATIONS (FOR OE02-NORMAL TYPE)

MODEL	H3V280SH(OE02 – NORMAL TYPE)
Discharge Rate (cc/rev)	280
Max. Pressure (kg/cm²)	350
Max. Speed (rpm)	1500

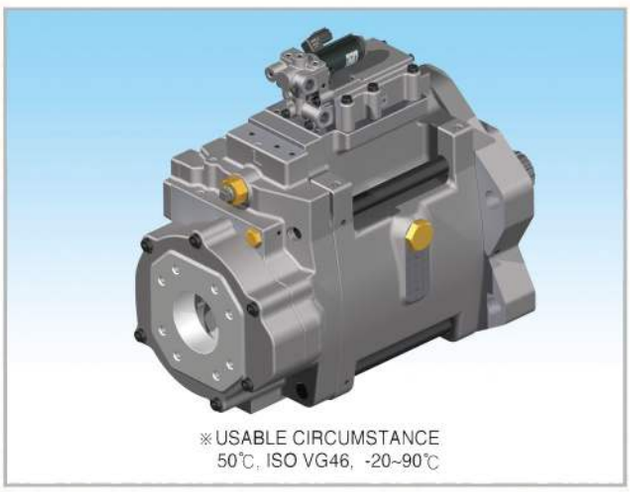

※USABLE CIRCUMSTANCE
50℃, ISO VG46, -20~90℃

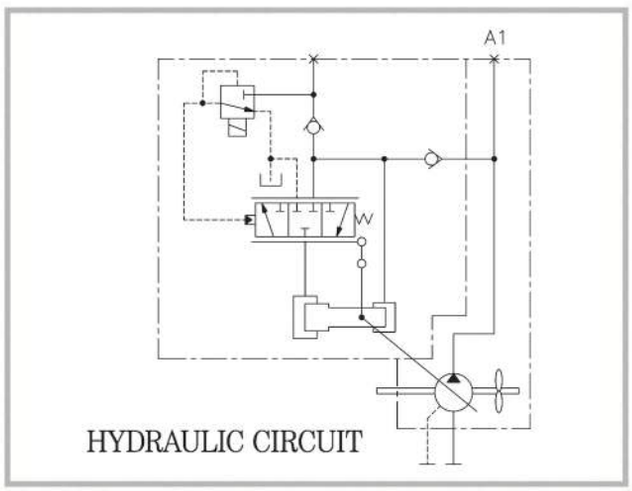

HYDRAULIC CIRCUIT

Dimensions of Shaft End(Spline Type)

MODEL	No. of teeth	Pitch Circle Dia(mm)	Module	Pressure Angle	Standard
H3V280SH (OE02 – NORMAL TYPE)	16	48	3.0	20°	JIS B 1603 : 1995

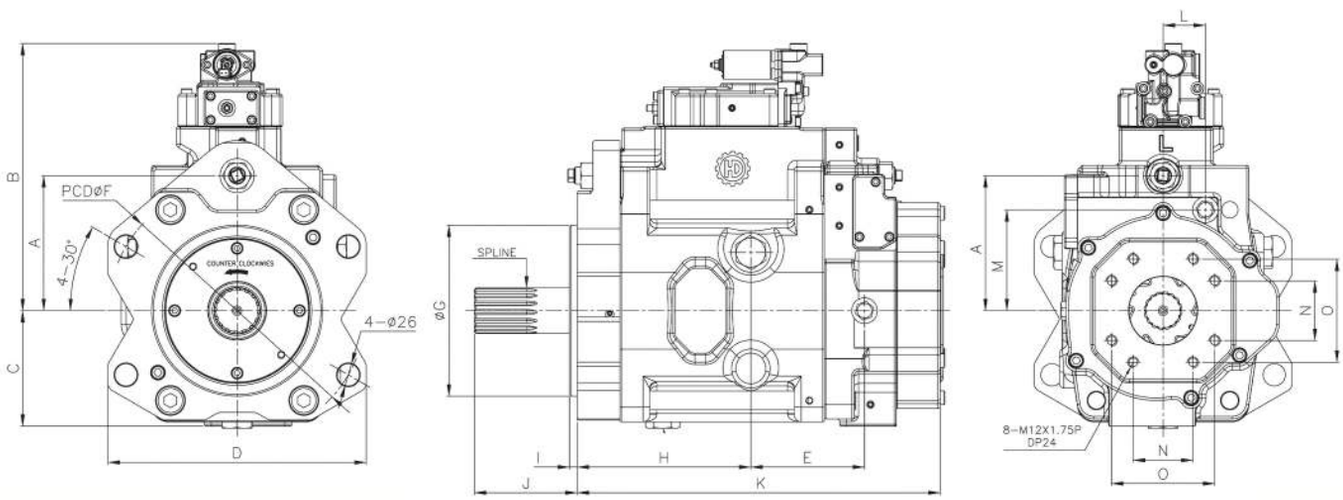

DIMENSIONS

(mm)

MODEL	A	B	C	D	E	F	G	H	I	J	K	L	M	N	O
H3V280SH (OE02 – NORMAL TYPE)	158	313	135	302	133	300	200	203	9	120	424.5	49.5	118	69.8	120.7

H3VG/H5VG SH SERIES
SWASH PLATE TYPE PISTON PUMPS

SPECIFICATIONS(FOR 3E00 TYPE)

MODEL	H3VG140SH	H3VG180SH	H5VG160SH	H5VG200SH
Discharge Rate(cc/rev)	140	180	160	200
Max. Pressure (kg/cm²)	350			
Max. Speed (rpm)	2150	2150	1900	1900

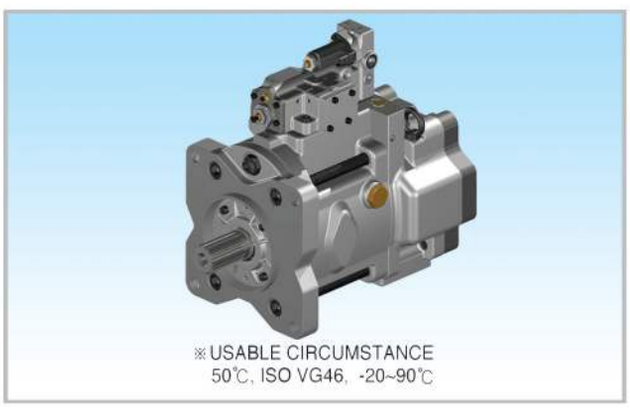

※USABLE CIRCUMSTANCE
50℃, ISO VG46, -20~90℃

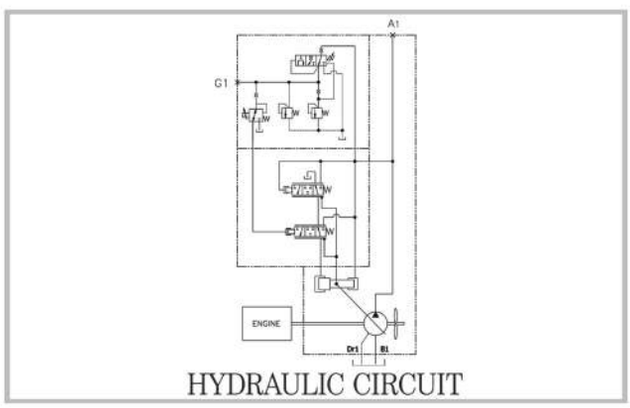

HYDRAULIC CIRCUIT

Dimensions of Shaft End(Spline Type)

MODEL	No. of teeth	Pitch Circle Dia(mm)	Module	Pressure Angle	Standard
H3VG140/180SH H5VG160/200SH	17	42.5	2.5	20°	JIS

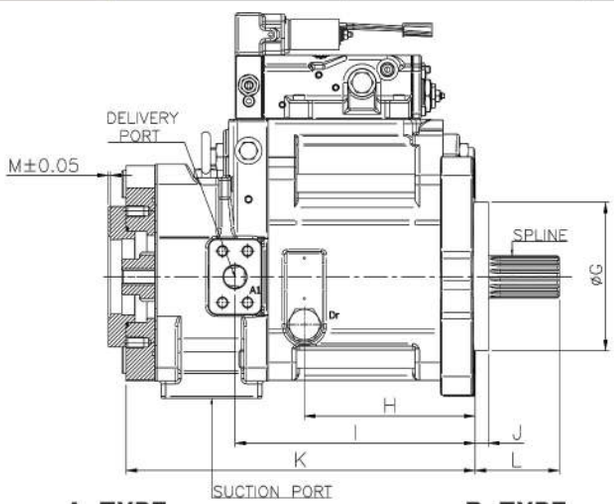

A-TYPE

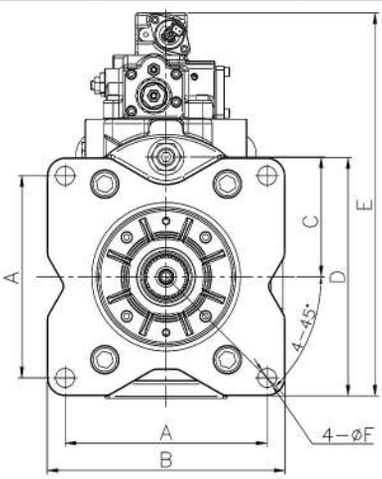

B-TYPE

C-TYPE

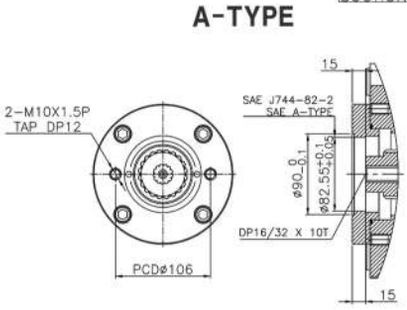

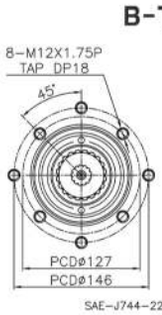

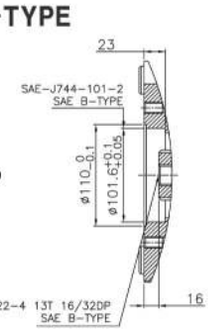

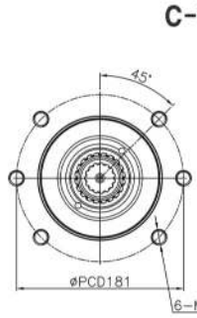

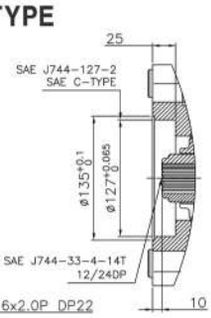

DIMENSIONS

(mm)

MODEL	A	B	C	D	E	F	G	H	I	J	K	L	M
H3VG140/180SH H5VG160/200SH	224.5	264.5	133	264	425.3	21	165	190	267	16	386	95	2.4

SPECIFICATIONS(FOR 2N00 / 2P00 TYPE)

MODEL	H3V63SR H3V63SL	H5V80SR H5V80SL	H3V112SR/H3V112SL H5V140SR/H5V140SL	H3V140SR H3V140SL
Discharge Rate(cc/rev)	63	80	112/140	140
Max. Pressure (kg/cm²)	350			
Max. Speed (rpm)	2650	2460	2360	2150
DIRECTION	CW(R) / CCW(L)			

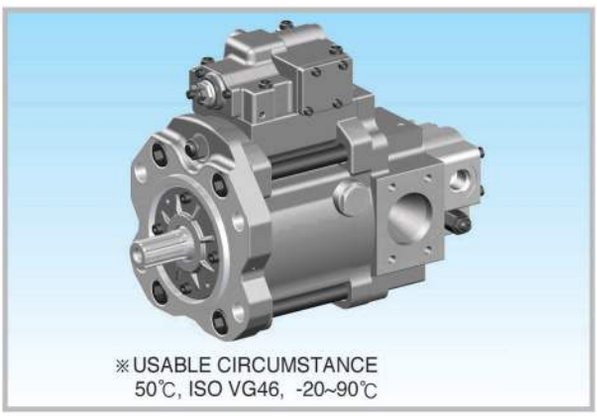

※USABLE CIRCUMSTANCE
50℃, ISO VG46, -20~90℃

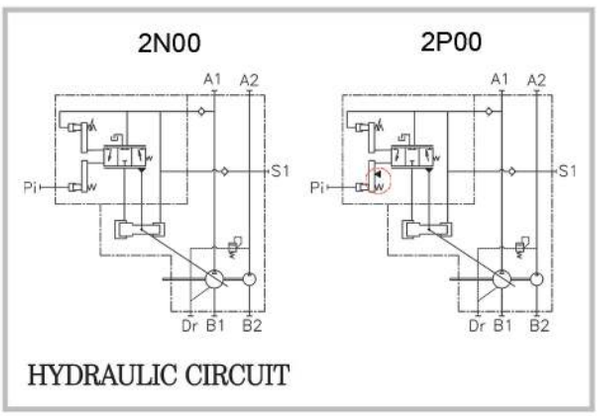

HYDRAULIC CIRCUIT

Dimensions of Shaft End(Spline Type)

MODEL	No. of teeth	Pitch circle dia(mm)	Module	Pressure angle	Standard
H3V63SR/H3V63SL H5V80SR/H5V80SL	14	29.6	12/24	30°	SAE J744
H3V112SR/H3V112SL H5V140SR/H5V140SL	12	30	2.5	20°	JIS B 1603 :1995
H3V140SR/H3V140SL	17	42.5	2.5	20°	JIS B 1603 :1995

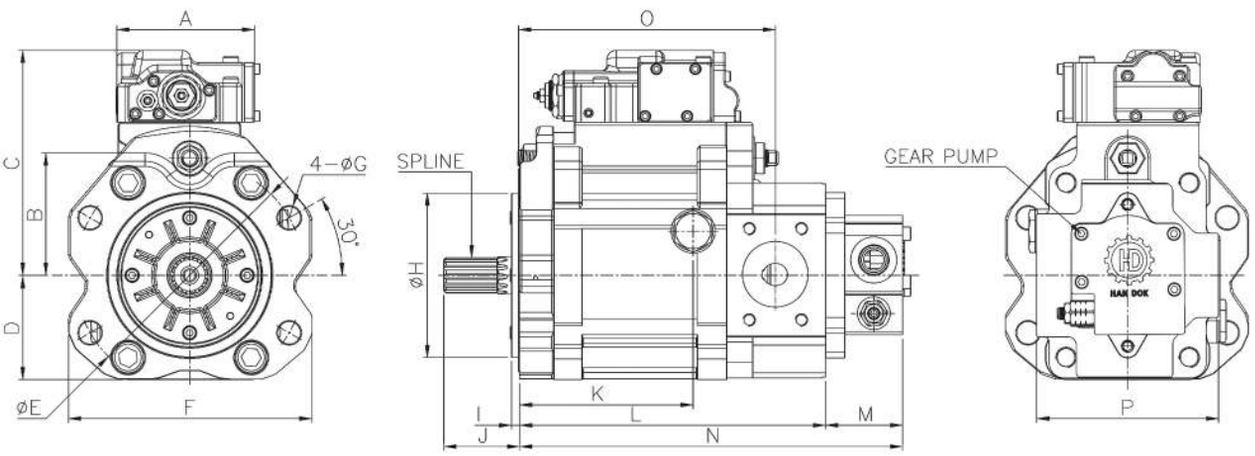

DIMENSIONS

(mm)

MODEL	A	B	C	D	E	F	G	H	I	J	K	L	M	N	O	P
H3V63SR/H3V63SL H5V80SR/H5V80SL	140	98	195	89	180	190	18	125	8	76	138	255	93	330	210	140
H3V112SR/H3V112SL H5V140SR/H5V140SL		114	220	100	224	234	22	160		78	167	300		375	249	160
H3V140SR/H3V140SL		124	245	114	250	258		180		93	190	343	96	418	287	175

SPECIFICATIONS(FOR 2N00 / 2P00 TYPE)

MODEL	H3V63SR H3V63SL	H5V80SR H5V80SL	H3V112SR/H3V112SL H5V140SR/H5V140SL	H3V140SR H3V140SL
Discharge Rate(cc/rev)	63	80	112/140	140
Max. Pressure (kg/cm²)	350			
Max. Speed (rpm)	2650	2460	2360	2150
DIRECTION	CW(R) / CCW(L)			

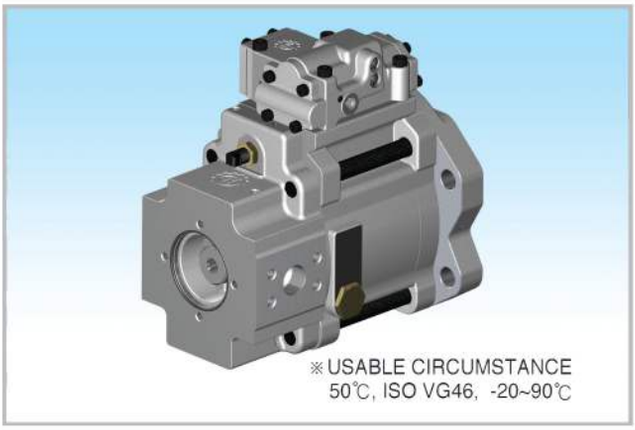

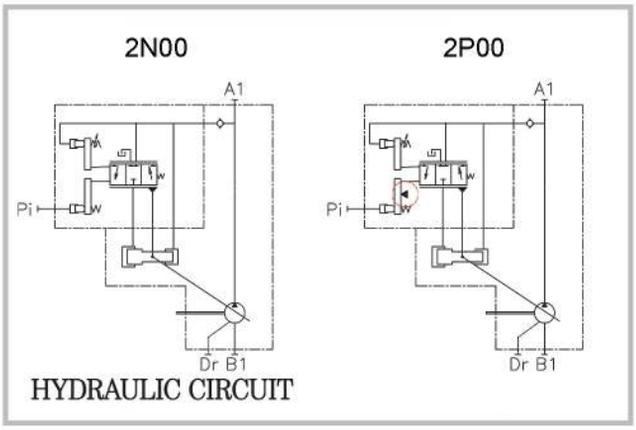

Dimensions of Shaft End(Spline Type)

MODEL	No. of teeth	Pitch circle dia(mm)	Module	Pressure angle	Standard
H3V63SR/H3V63SL H5V80SR/H5V80SL H3V112SR/H3V112SL H5V140SR/H5V140SL	14	29.6	12/24	30°	SAE J744
	12	30	2.5	20°	JIS B 1603 :1995
H3V140SR/H3V140SL	17	42.5	2.5	20°	JIS B 1603 :1995

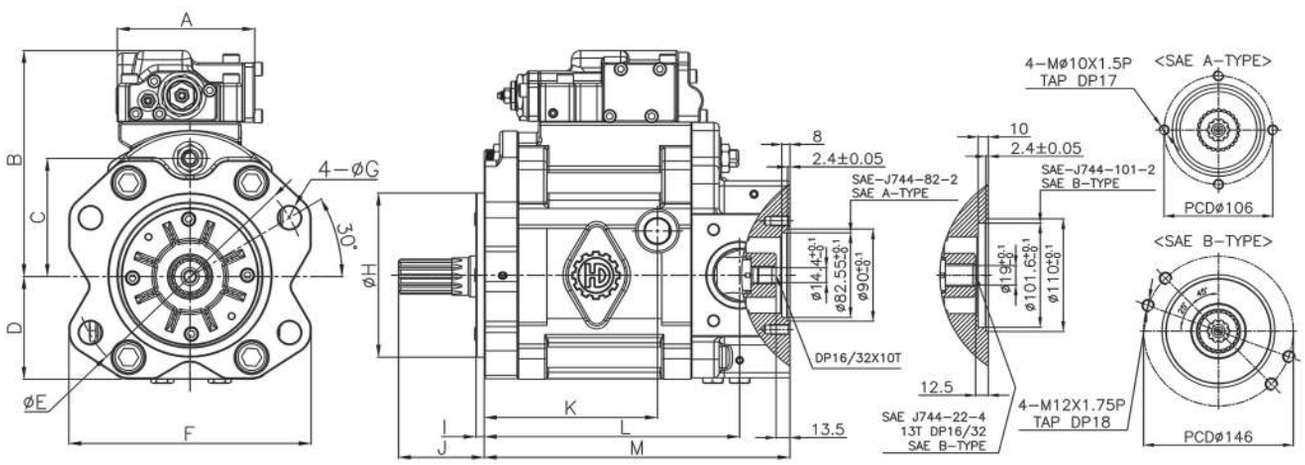

DIMENSIONS

(mm)

MODEL	A	B	C	D	E	F	G	H	I	J	K	L	M
H3V63SR/H3V63SL H5V80SR/H5V80SL	140	195	98	89	180	190	18	125	8	76	138	210	286
H3V112SR/H3V112SL H5V140SR/H5V140SL		220	110	100	224	234	22	160		78	167	249	326
H3V140SR/H3V140SL		245	133	114	250	258		180		93	190	287	379

SPECIFICATIONS (FOR 3N09 TYPE)

MODEL	H3V140SP	H3V180SP	H5V160SP	H5V200SP
Discharge Rate(cc/rev)	140	180	160	200
Max. Pressure (kg/cm²)	350			
Max. Speed (rpm)	2500		2200	

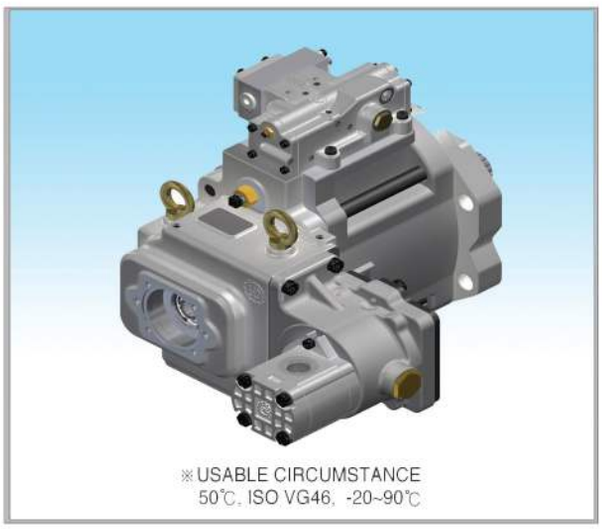

※USABLE CIRCUMSTANCE
50℃, ISO VG46, -20~90℃

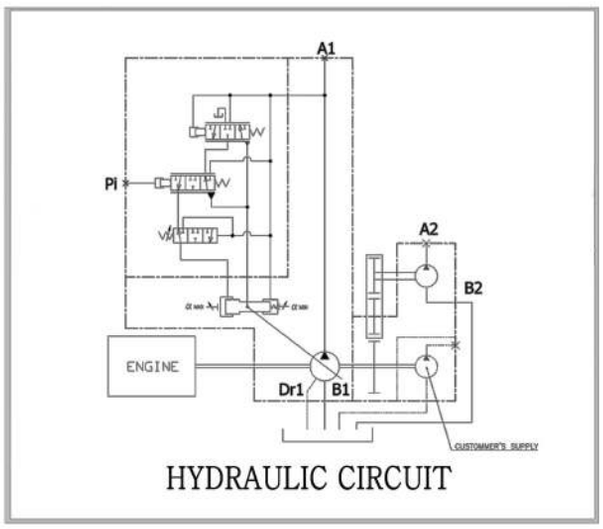

HYDRAULIC CIRCUIT

Dimensions of Shaft End(Spline Type)

MODEL	No.of teeth	Pitch circle dia(mm)	Module	Pressure angle	Standard
H3V140/180SP H5V160/200SP	17	42.5	2.5	20°	JIS B 1603:1995

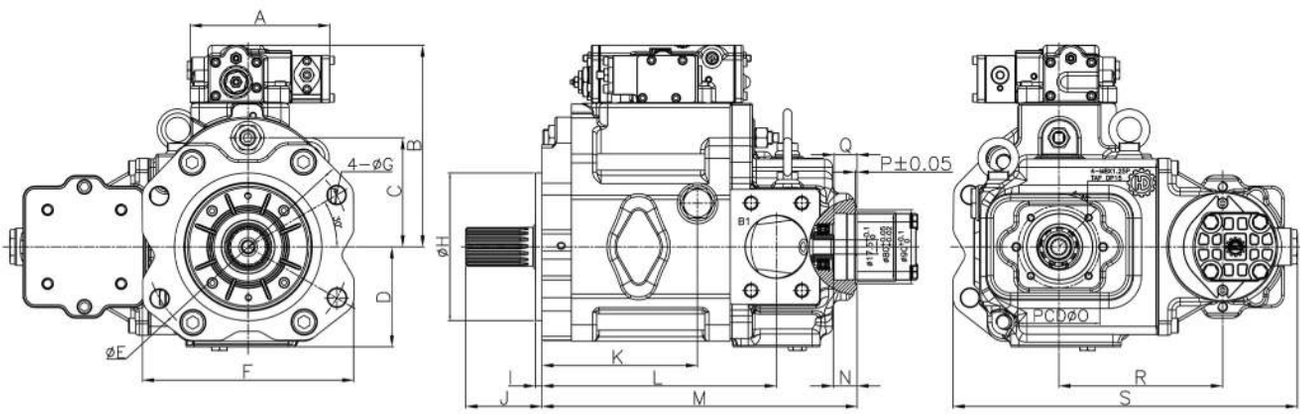

DIMENSIONS

(mm)

MODEL	A	B	C	D	E	F	G	H	I	J	K	L	M	N	O	P	Q	R	S
H3V140/180SP H5V160/200SP	170.5	246	133	122	250	258	22	180	8	93	190	286.5	385	29	100	2.4	28	200	420

FLANGE MOUNTING FACE (SAE Rule) FOR H3V/H5V SERIES

Flange Mounting face for Gear Pump (H3V63/H3V112/H5V80/H5V140 Single Pump)

H3V63	A-TYPE SAE J744-82-2	B-TYPE SAE J744-101-2
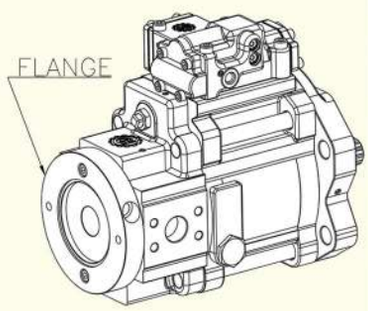	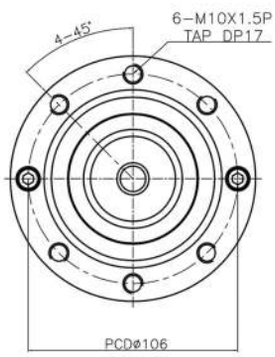	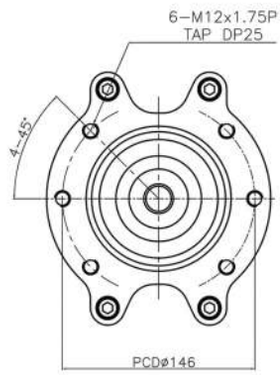

H3V112	A-TYPE SAE J744-82-2	B&BB-TYPE SAE J744-101-2
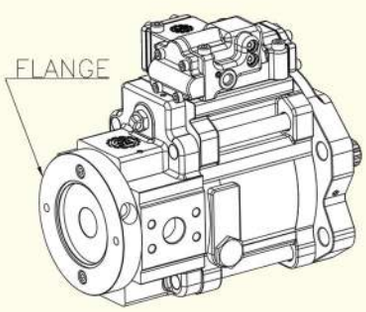	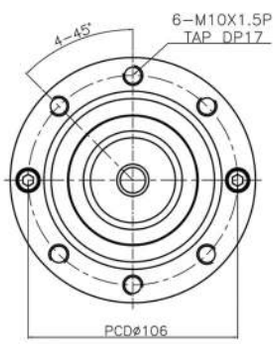	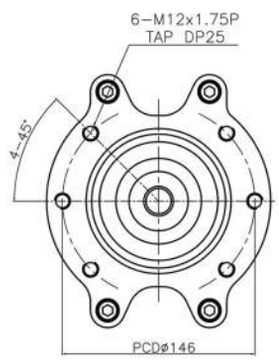
	C&CC-TYPE **SAE J744-127-2**	**D-TYPE** **SAE J744-152-2**
	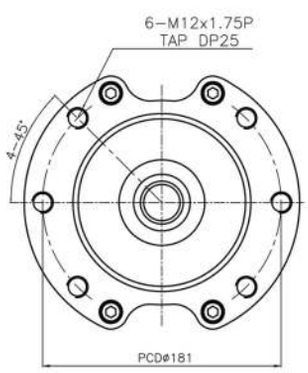	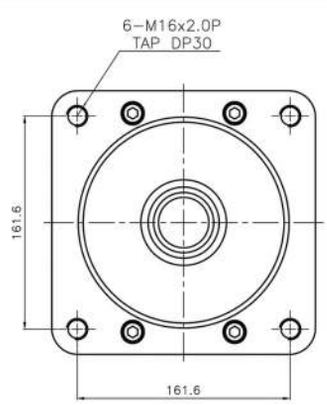

FLANGE MOUNTING FACE (SAE Rule) FOR H3V/H5V SERIES

Flange Mounting face for Gear Pump (H3V140/H3V180/H5V160/H5V200 Single Pump)

H3V140 & 180	A-TYPE SAE J744-82-2	B&BB-TYPE SAE J744-101-2
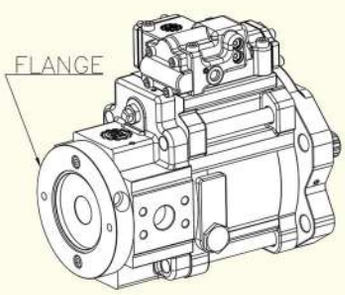	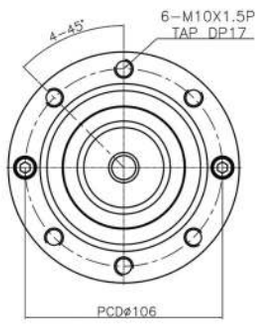	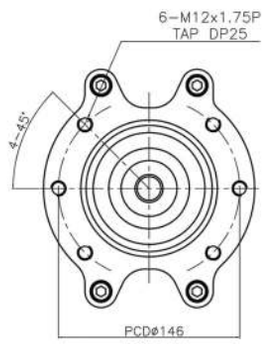
	C&CCTYPE **SAE J744-127-2**	**D-TYPE** **SAE J744-152-2**
	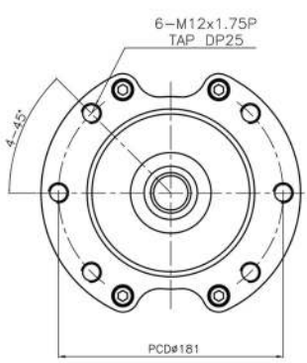	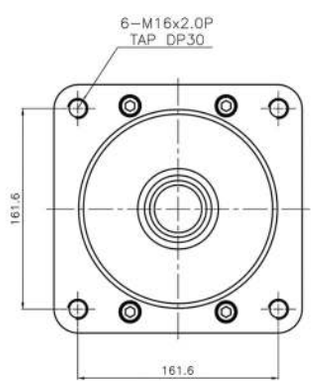

H3V/H5V DT SERIES
SWASH PLATE TYPE DOUBLE PISTON PUMPS

SPECIFICATIONS (FOR 9N00 / 9P00 TYPE)

MODEL	H3V63DT	H5V112DT	H3V140DT H5V180DT	H3V280DT
Discharge Rate(cc/rev)	63	112	140 / 180	280
Max. Pressure (kg/cm²)	350			
Max. Speed (rpm)	2650	2360	2150	1900

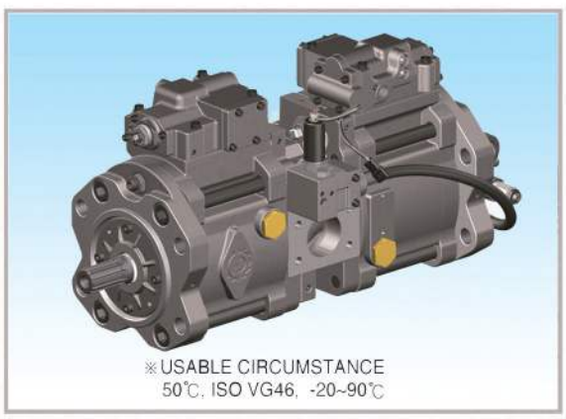

※USABLE CIRCUMSTANCE
50℃, ISO VG46, -20~90℃

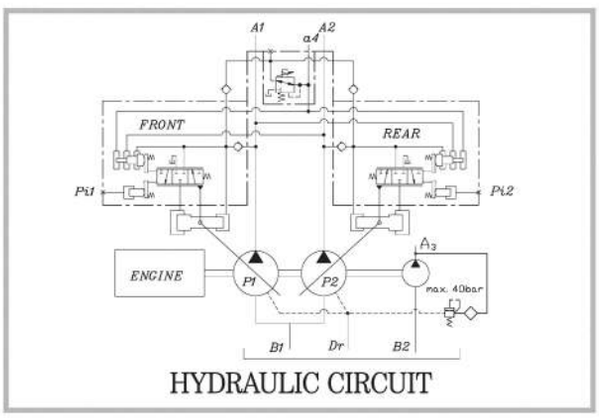

HYDRAULIC CIRCUIT

Dimensions of Shaft End(Spline Type)

MODEL	No. of teeth	Pitch Circle Dia.(mm)	Module	Pressure Angle	Standard
H3V63DT	14	29.6	12/24	30°	ANSI B92.1b:1970
H3V112DT	12	30	2.5	20°	JIS B 1603 : 1995
	14	35			
H3V140&180DT	14	35	2.5	20°	
	17	42.5			
H3V180DT(KOBELCO TYPE)	14	42	3.0	20°	
H3V280DT	22	66	3.0	30°	DIN5480:1991

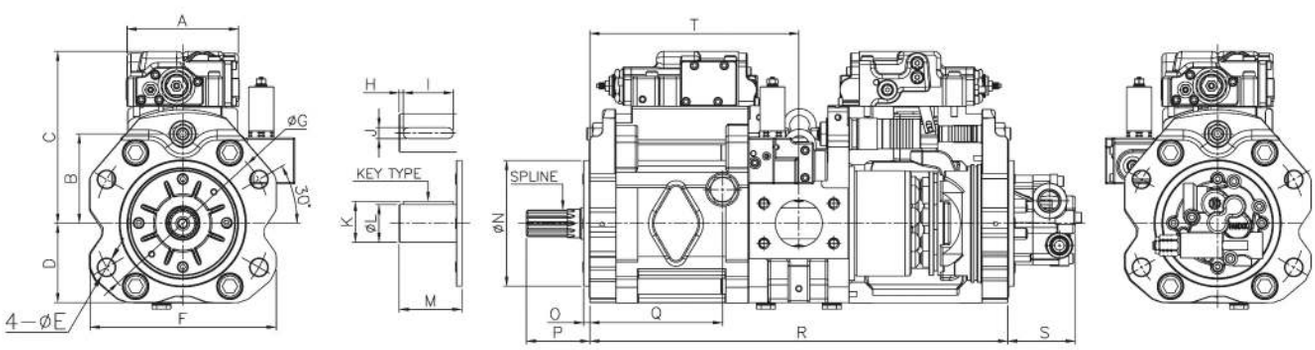

DIMENSIONS

(mm)

MODEL	A	B	C	D	E	F	G	H	I	J	K	L	M	N	O	P	Q	R	S	T
H3V63DT	140	98	195	89	18	190	180	-					76	125	8	76	138	456	93	203
H3V112DT		114	220	100	22	234	224	-					78	160		78	167	534		269
H3V140&180DT		133	245	114		258	250	5	95	18	64	60	93	180		93	190	610	96	305
H3V180DT (KOBELCO TYPE)													180							
H3V280DT		158	286	128	26	302	300			20	74.5	70	115	200	9	115	203	748	104	374

H3V/H5V DTH SERIES
SWASH PLATE TYPE DOUBLE PISTON PUMPS

SPECIFICATIONS (FOR 9N00 / 9P00 TYPE)

MODEL	H3V180DTH/H5V200DTH	H3V280DTH
Discharge Rate (cc/rev)	180 / 200	280
Max. Pressure (kg/cm²)	350	
Max. Speed (rpm)	2150	1900

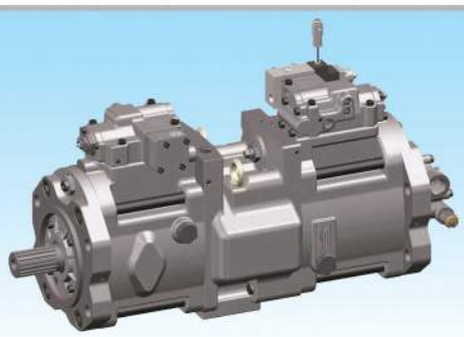

※USABLE CIRCUMSTANCE
50℃, ISO VG46, -20~90℃

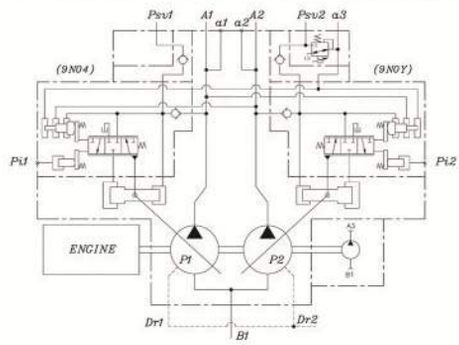

HYDRAULIC CIRCUIT

Dimensions of Shaft End(Spline Type)

MODEL	No. of teeth	Pitch Circle Dia(mm)	Module	Pressure Angle	Standard
H3V180DTH H5V200DTH	17	42.5	2.5	20°	JIS B 1603 : 1995
H3V280DTH	18	54	3	20°	JIS B 1603 : 1995

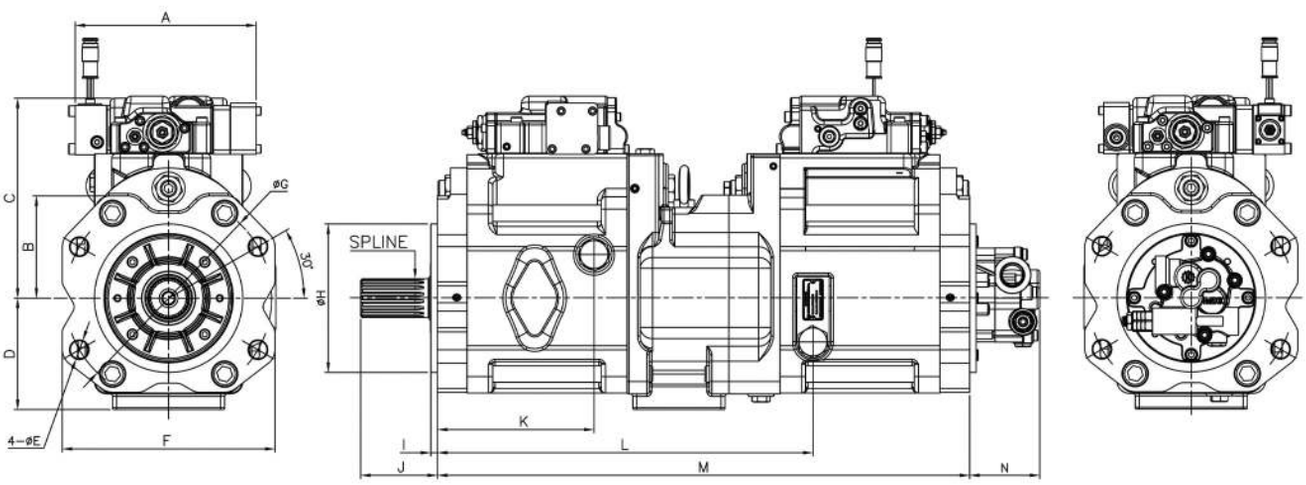

DIMENSIONS

(mm)

MODEL	A	B	C	D	E	F	G	H	I	J	K	L	M	N
H3V180DTH H5V200DTH	219.6	127	245	135	22	256	250	180	8	190	456	93	646	96
H3V280DTH		143	271	150	26	300	300	200	9	115	617	115	783	104

H3V/H5V DTH SERIES
SWASH PLATE TYPE DOUBLE PISTON PUMPS

SPECIFICATIONS (FOR OE01-NORMAL & HITACHI)

MODEL	H3V180DTH/H5V200DTH	H3V280DTH
Discharge Rate (cc/rev)	180 / 200	280
Max. Pressure (kg/cm²)	350	
Max. Speed (rpm)	2150	1900

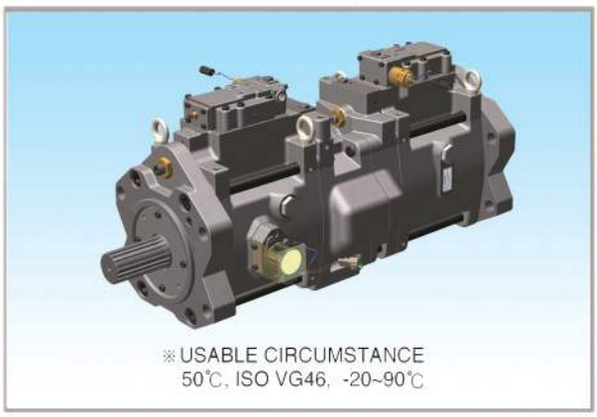

※USABLE CIRCUMSTANCE
50℃, ISO VG46, -20~90℃

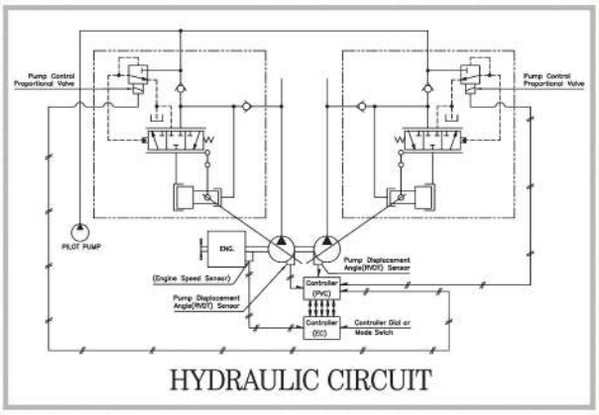

HYDRAULIC CIRCUIT

Dimensions of Shaft End(Spline Type)

MODEL	No. of teeth	Pitch Circle Dia(mm)	Module	Pressure Angle	Standard
H3V180DTH (EX400&450)	17	42.5	2.5	20°	JIS B 1603 : 1995
H3V280DTH (EX750&800)	18	54	3	20°	JIS B 1603 : 1995

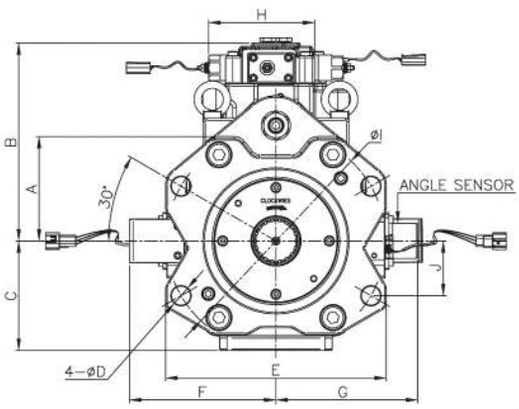

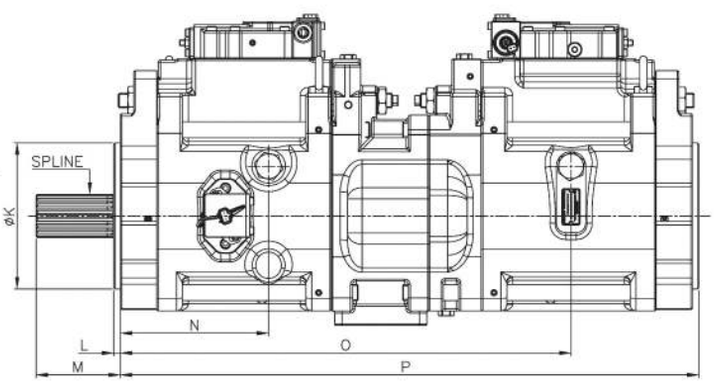

DIMENSIONS

(mm)

MODEL	A	B	C	D	E	F	G	H	I	J	K	L	M	N	O	P
H3V180DTH (EX400&450)	127	231	135	22	258	176	231	145.2	250	62.5	180	8	93	190	420	610
H3V280DTH (EX750&800)	143	271	150	26	302	201	194		300	75	200	9	115	203	617	748

H3V/H5V DTP SERIES
SWASH PLATE TYPE DOUBLE PISTON PUMPS



※USABLE CIRCUMSTANCE
50℃, ISO VG46, -20~90℃

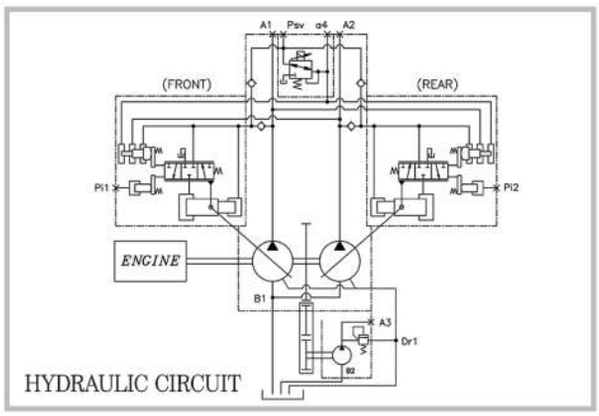

HYDRAULIC CIRCUIT

Dimensions of Shaft End(Spline-A) (FOR 9N00 / 9P00 TYPE)

MODEL	No. of teeth	Pitch Circle Dia(mm)	Module	Pressure Angle	Standard
H3V63DTP / H5V80DTP H3V112DTP / H5V140DTP	13	15.8	16/32	30°	ANSI B92.1b:1970
H3V140DTP / H5V160DTP H3V180DTP / H5V200DTP	13	13	1.0	20°	JIS B 1603: 1995

Dimensions of Shaft End(Spline-B) (FOR 9N00 / 9P00 TYPE)

MODEL	No. of teeth	Pitch Circle Dia(mm)	Module	Pressure Angle	Standard
H3V63DTP	14	29.6	12/24	30°	SAE J744
H5V80DTP	12	30	2.5	20°	JIS B 1603:1995
H3V112DTP	12/14	30/35	2.5		
H3V140 / 180DTP	17	42.5	2.5		
H5V160DTP	17	42.5	2.5		
H5V200DTP	17	42.5	2.5		

Dimensions of Shaft End(Spline-C) (FOR 9N00 / 9P00 TYPE)

MODEL	No. of teeth	Pitch Circle Dia(mm)	Module	Pressure Angle	Standard
H3V63DTP / H5V8DTP H3V112 DTP / H5V140DTP	13	13	1.0	20°	JIS B 1603 : 1995
H3V140DTP / H5V160DTP H3V180DTP / H5V200DTP	13	20.6	16/32	30°	SAE

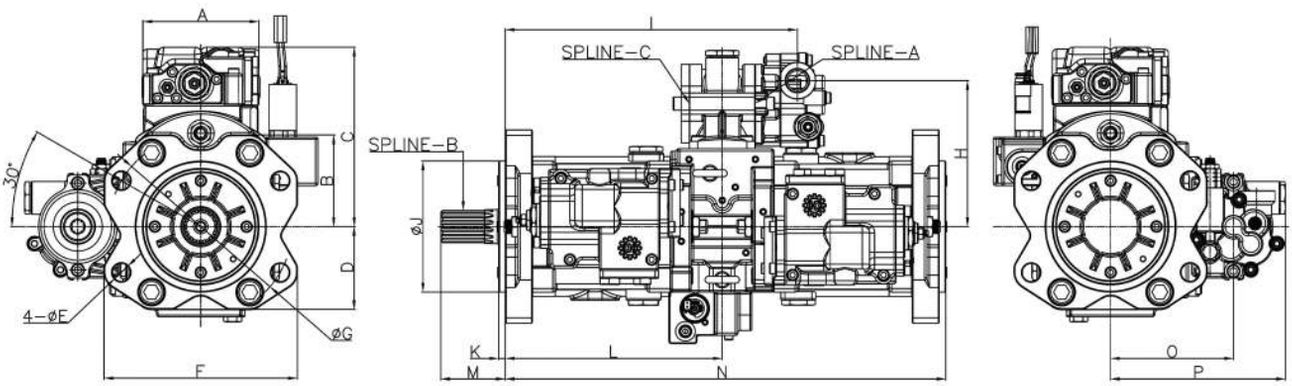

DIMENSIONS

(mm)

MODEL	A	B	C	D	E	F	G	H	I	J	K	L	M	N	O	P
H3V63DTP / H5V80DTP	140	98	195	89	18	190	180	177	91	125	8	228	76	464	150	212
H3V112DTP / H5V140DTP		110	220	100	22	234	224	214	91	160		265	78	538		
H3V140DTP / H5V160DTP		124	245	114		256	250	257	104	180		305	93	618	201	292
H3V180DTP / H5V200DTP																

H3V/H5V DTP SERIES
SWASH PLATE TYPE DOUBLE PISTON PUMPS



※USABLE CIRCUMSTANCE
50℃, ISO VG46, -20~90℃

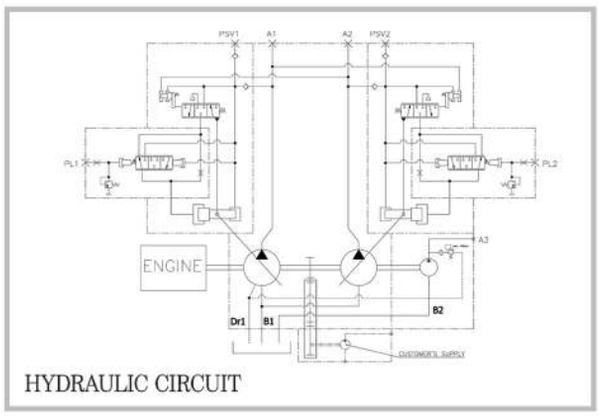

HYDRAULIC CIRCUIT

Dimensions of Shaft End(Spline-A) (FOR 5L00 TYPE)

MODEL	No. of teeth	Pitch Circle Dia(mm)	Module	Pressure Angle	Standard
H3V63DTP / H5V80DTP H3V112DTP / H5V140DTP	13	15.8	16/32	30°	ANSI B92.1b:1970
H3V140DTP / H5V160DTP H3V180DTP / H5V200DTP	13	13	1.0	20°	JIS B 1603: 1995

Dimensions of Shaft End(Spline-B) (FOR 5L00 TYPE)

MODEL	No. of teeth	Pitch Circle Dia(mm)	Module	Pressure Angle	Standard
H3V63DTP	14	29.6	12/24	30°	SAE J744
H5V80DTP	12	30	2.5	20°	JIS B 1603:1995
H3V112DTP	12/14	30/35	2.5		
H3V140 / 180DTP	17	42.5	2.5		
H5V160DTP	17	42.5	2.5		
H5V200DTP	17	42.5	2.5		

Dimensions of Shaft End(Spline-C) (FOR 5L00 TYPE)

MODEL	No. of teeth	Pitch Circle Dia(mm)	Module	Pressure Angle	Standard
H3V63DTP / H5V8DTP H3V112 DTP / H5V140DTP	13	13	1.0	20°	JIS B 1603 : 1995
H3V140DTP / H5V160DTP H3V180DTP / H5V200DTP	13	20.6	16/32	30°	SAE

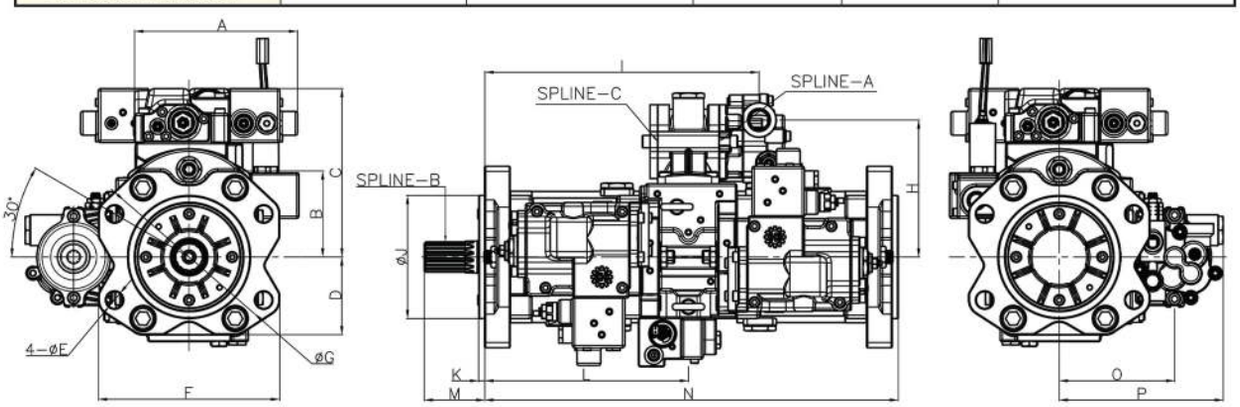

DIMENSIONS

(mm)

MODEL	A	B	C	D	E	F	G	H	I	J	K	L	M	N	O	P
H3V63DTP / H5V80DTP	213	98	195	89	18	190	180	177	91	125	8	228	76	464	150	212
H3V112DTP / H5V140DTP		110	220	100	22	234	224	214	91	160		265	78	538		
H3V140DTP / H5V160DTP		124	245	114		256	250	257	104	180		305	93	618	201	292
H3V180DTP / H5V200DTP																

H7V63DTP
SWASH PLATE TYPE DOUBLE PISTON PUMP

SPECIFICATIONS (FOR 9X2D / 9Y2C TYPE)

MODEL	H7V63DTP
Discharge rate(cc/rev)	63
Max. pressure (kg/cm²)	350
Max.speed(rpm)	2400

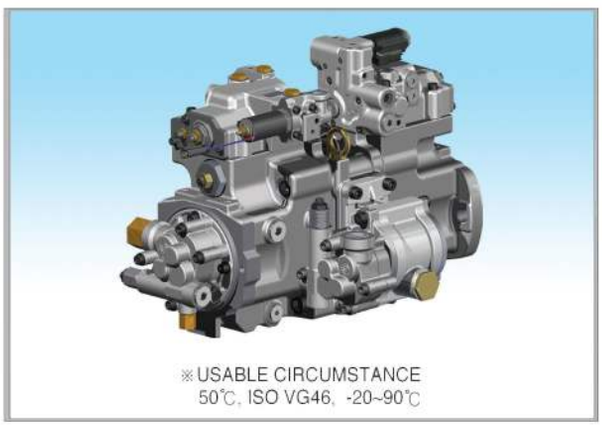

※USABLE CIRCUMSTANCE
50℃, ISO VG46, -20~90℃

Dimensions of Shaft End(Spline Type)

MODEL	No.of teeth	Pitch circle dia(mm)	Module	Pressure angle	Standard
H7V63DTP	14	29.96	12/24	30°	SAE

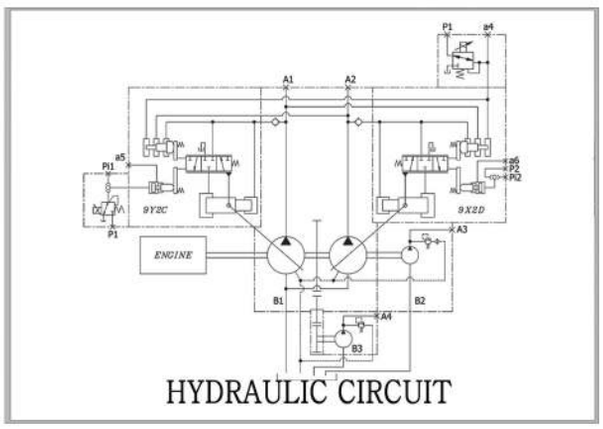

HYDRAULIC CIRCUIT

Dimensions of Shaft End(Spline-A)

MODEL	No. of teeth	Pitch circle dia(mm)	Module	Pressure angle	Standard
H7V63DTP	10	15.88	16/32	30°	ANSI B92.1 1970

Dimensions of Shaft End(Spline-B)

MODEL	No. of teeth	Pitch circle dia(mm)	Module	Pressure angle	Standard
H7V63DTP	13	13	1.0	30°	JIS B 1603 :1995

Flange Mounting face for Suction Port

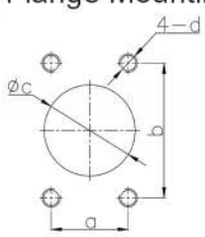

(mm)

a	50.8
b	88.9
c	60
d	M12x1.75P DP24

Flange Mounting face for Delivery Port

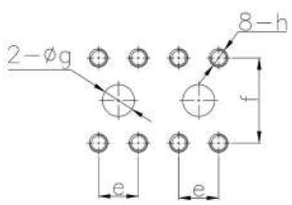

(mm)

e	23.8
f	50.8
g	19
h	M10x1.5P DP17

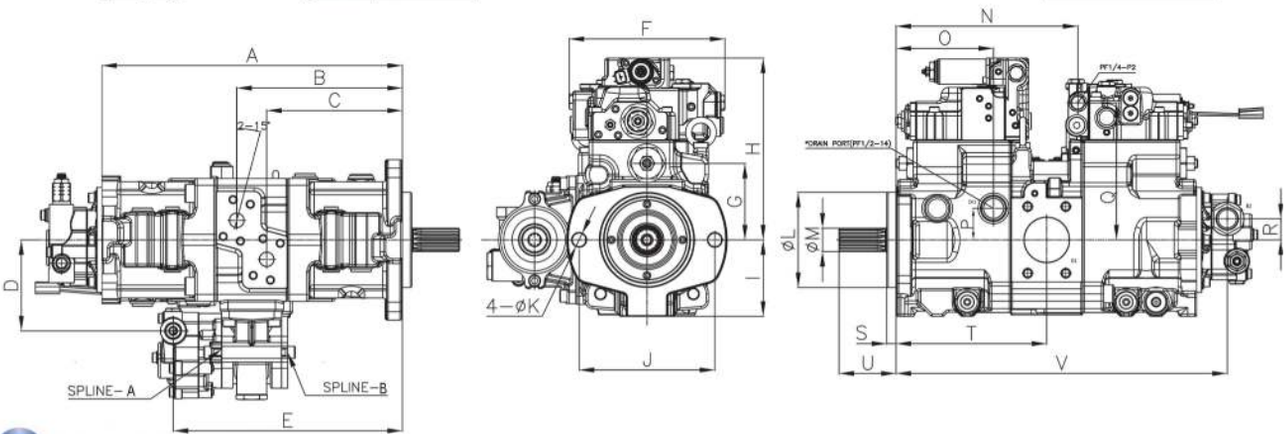

DIMENSIONS

(mm)

MODEL	A	B	C	D	E	F	G	H	I	J	K	L	M	N	O	P	Q	R	S	T	U	V
H7V63DTP	401	221	181	121	306	208	102	242	102	181	18	127	31.2	242.5	130	18	127	31.2	12.5	201	76.2	442

H7V63DTP
SWASH PLATE TYPE DOUBLE PISTON PUMP

SPECIFICATIONS(FOR 9N00 TYPE)

MODEL	H7V63DTP
Discharge rate(cc/rev)	63
Max. pressure (kg/cm²)	350
Max.speed(rpm)	2400

Dimensions of Shaft End(Spline Type)

MODEL	No.of teeth	Pitch circle dia(mm)	Module	Pressure angle	Standard
H7V63DTP	14	29.96	12/24	30°	SAE

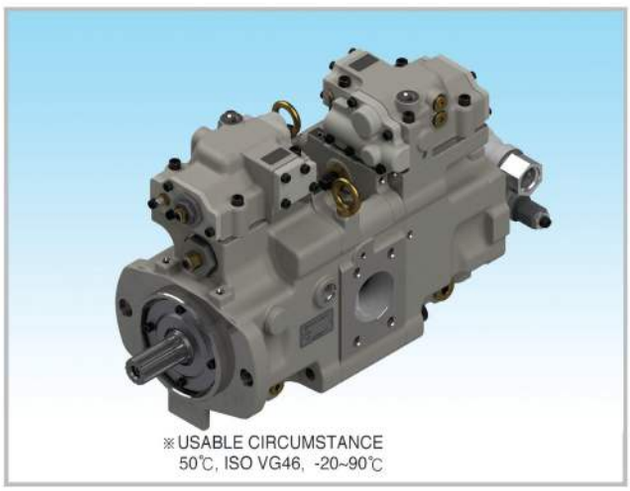

※USABLE CIRCUMSTANCE
50℃, ISO VG46, -20~90℃

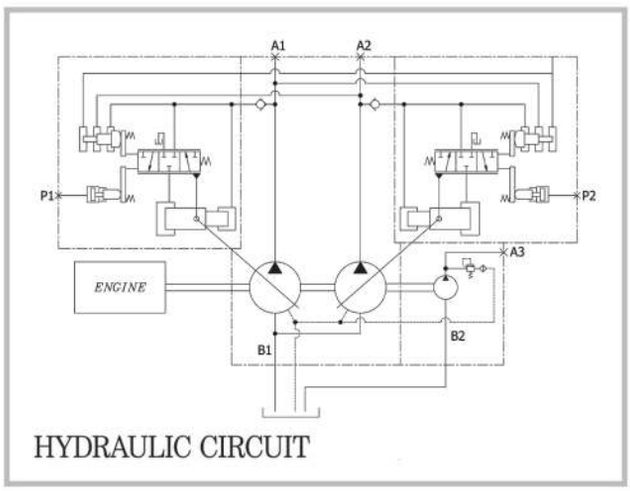

HYDRAULIC CIRCUIT

Flange Mounting face for Suction Port

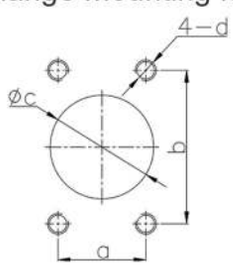

(mm)

a	50.8
b	88.9
c	60
d	M12x1.75P DP24

Flange Mounting face for Delivery Port

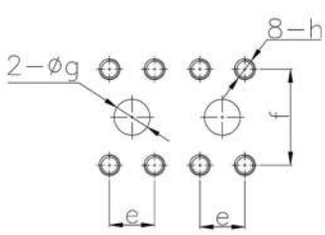

(mm)

e	23.8
f	50.8
g	19
h	M10x1.5P DP17

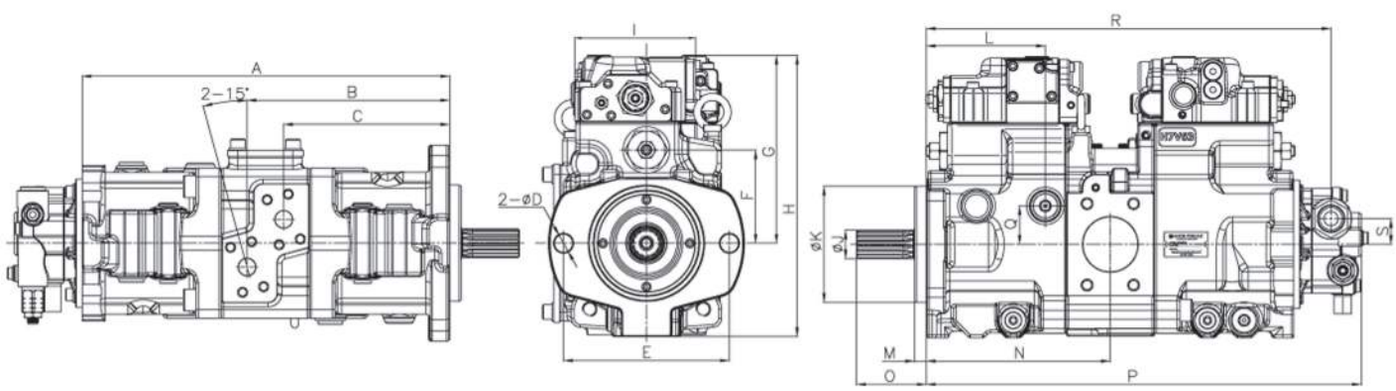

DIMENSIONS

(mm)

MODEL	A	B	C	D	E	F	G	H	I	J	K	L	M	N	O	P	Q	R	S
H7V63DTP	401	221	181	20	181	102	205	307	131.5	31.2	127	130	12.5	201	76.2	475	42	442	28

H7V63DTP
SWASH PLATE TYPE DOUBLE PISTON PUMP

SPECIFICATIONS(FOR 9C00 TYPE)

MODEL	H7V63DTP
Discharge rate(cc/rev)	63
Max. pressure (kg/cm²)	350
Max.speed(rpm)	2400

Dimensions of Shaft End(Spline Type)

MODEL	No.of teeth	Pitch circle dia(mm)	Module	Pressure angle	Standard
H7V63DTP	14	29.96	12/24	30°	SAE

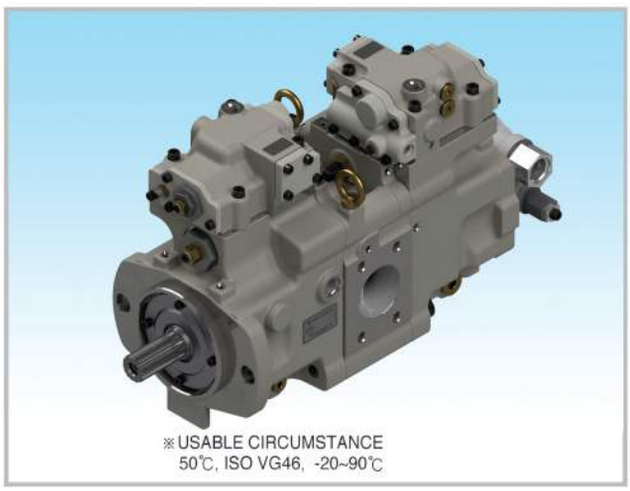

※USABLE CIRCUMSTANCE
50℃, ISO VG46, -20~90℃

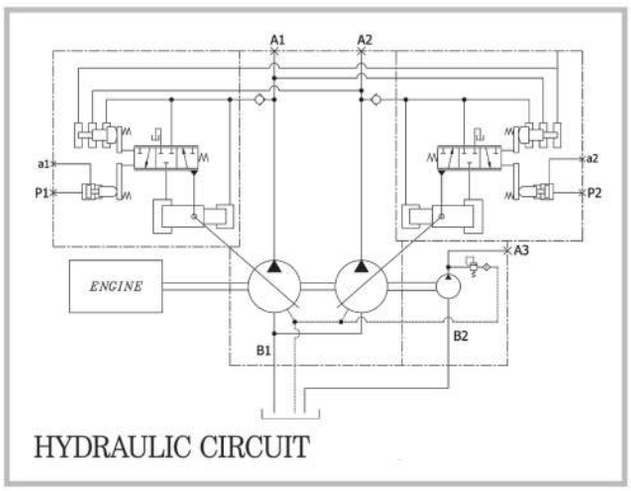

HYDRAULIC CIRCUIT

Flange Mounting face for Suction Port

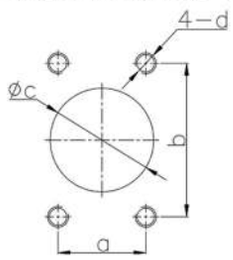

(mm)

a	50.8
b	88.9
c	60
d	M12x1.75P DP24

Flange Mounting face for Delivery Port

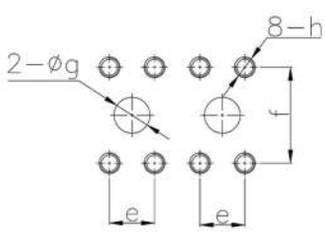

(mm)

e	23.8
f	50.8
g	19
h	M10x1.5P DP17

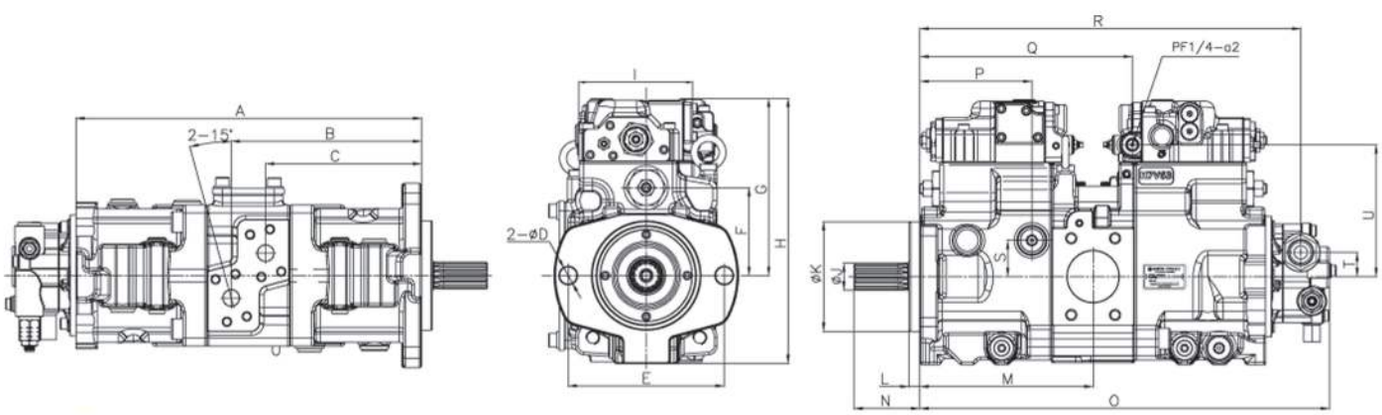

DIMENSIONS

(mm)

MODEL	A	B	C	D	E	F	G	H	I	J	K	L	M	N	O	P	Q	R	S	T	U
H7V63DTP	401	221	181	20	181	102	205	307	131.5	31.2	127	12.5	201	76.2	475	130	246.5	442	42	28	153

H3V112DP FOR SUMITOMO / CASE
PARALLEL TYPE SWASH PLATE PISTON PUMP

SPECIFICATIONS(FOR 9N00 / 9S09 TYPE)

MODEL	H3V112DP (FOR SUMITOMO / CASE)
Discharge Rate(cc/rev)	112
Max. Pressure (kg/cm²)	350
Max. Speed (rpm)	2,000

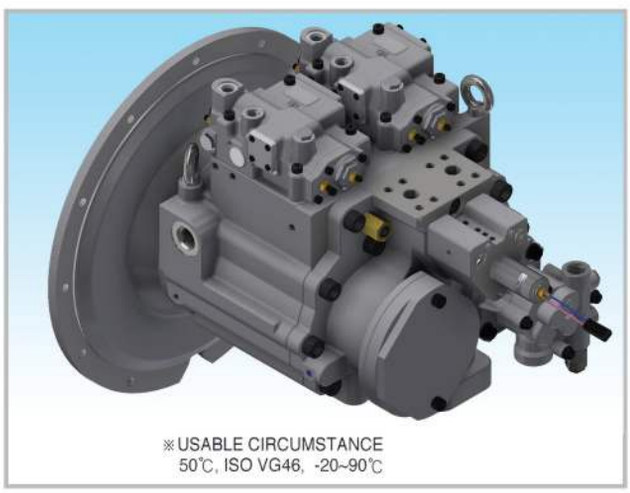

※USABLE CIRCUMSTANCE
50℃, ISO VG46, -20~90℃

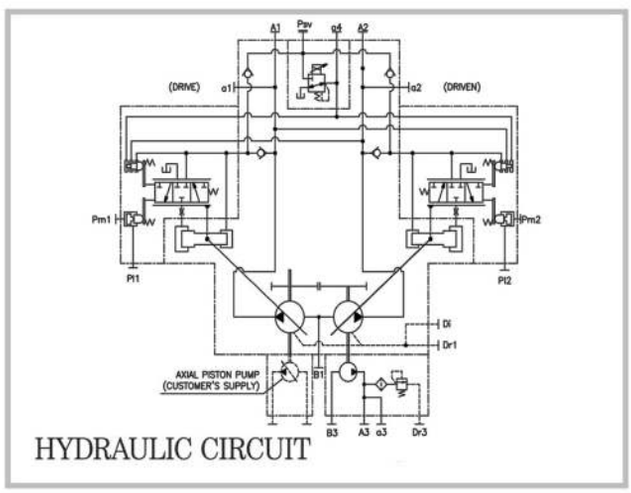

HYDRAULIC CIRCUIT

Dimensions of Shaft End(Spline Type)

MODEL	No. of teeth	Pitch circle dia(mm)	Module	Pressure angle	Standard
H3V112DP (FOR SUMITOMO/ CASE)	14	35	2.5	20°	JIS B 1603: 1995

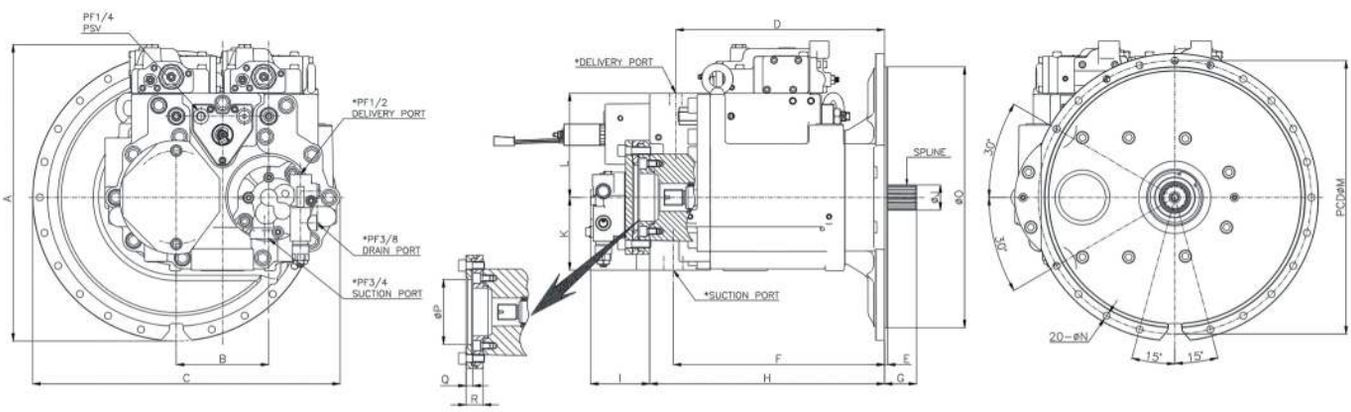

DIMENSIONS

(mm)

MODEL	A	B	C	D	E	F	G	H	I	J	K	L	M	N	O	P	Q	R
H3V112DP (FOR SUMITOMO/ CASE)	465	145	482.5	327.5	4.5	331.5	50	368.5	93	39.5	114	163	428.6	11	409.6	101.6	11	27

H3V112DP FOR SANY / HYUNDAI
PARALLEL TYPE SWASH PLATE PISTON PUMP

SPECIFICATIONS (FOR 9N00 / 9S09 TYPE)

MODEL	H3V112DP (FOR SANY/ HYUNDAI)
Discharge Rate(cc/rev)	112
Max. Pressure (kg/cm²)	350
Max. Speed (rpm)	2,000

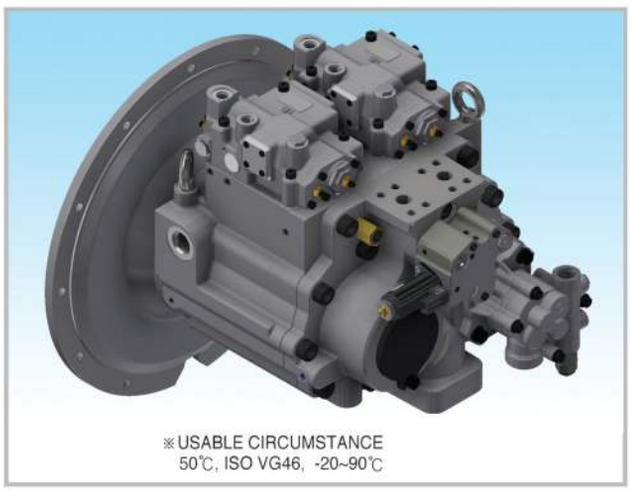

※USABLE CIRCUMSTANCE
50℃, ISO VG46, -20~90℃

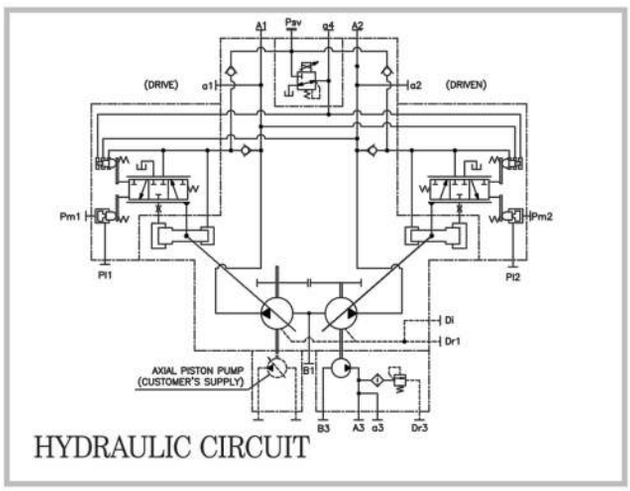

HYDRAULIC CIRCUIT

Dimensions of Shaft End(Spline Type)

MODEL	No. of teeth	Pitch circle dia(mm)	Module	Pressure angle	Standard
H3V112DP (FOR SANY/HYUNDAI)	14	35	2.5	20°	JIS B 1603: 1995

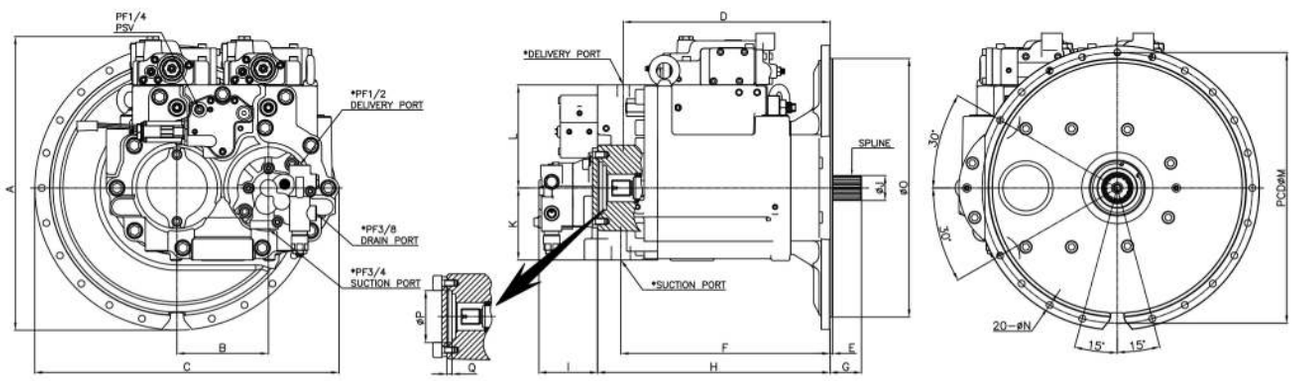

DIMENSIONS

(mm)

MODEL	A	B	C	D	E	F	G	H	I	J	K	L	M	N	O	P	Q
H3V112DP (FOR SANY /HYUNAI)	465	145	482.5	327.5	4.5	331.5	50	368.5	93	39.5	114	163	428.6	11	409.6	82.5	8

H3V112DP(FOR SANY CRANE SC500) WITHOUT EPR SWASH PLATE TYPE PISTON PUMP

SPECIFICATIONS(FOR 9S00 TYPE)

MODEL	H3V112DP(FOR SANY CRANE SC500)
Discharge Rate(cc/rev)	112
Max. Pressure (kg/cm²)	350
Max. Speed (rpm)	2,000



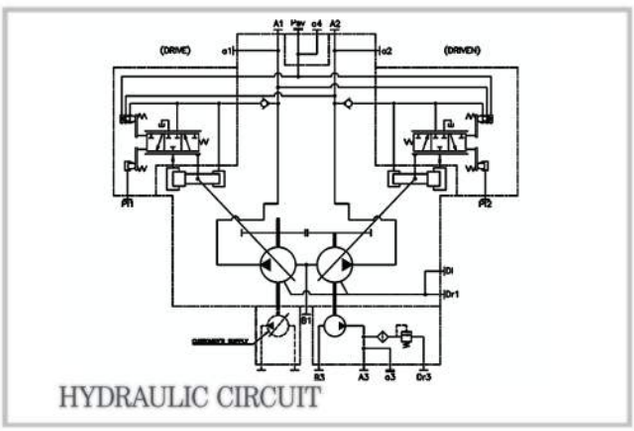

Dimensions of Shaft End(Spline Type)

MODEL	No. of teeth	Pitch circle dia(mm)	Module	Pressure angle	Standard
H3V112DP (FOR SANY CRANE) SC500	14	35	2.5	20°	JIS B 1603 :1995

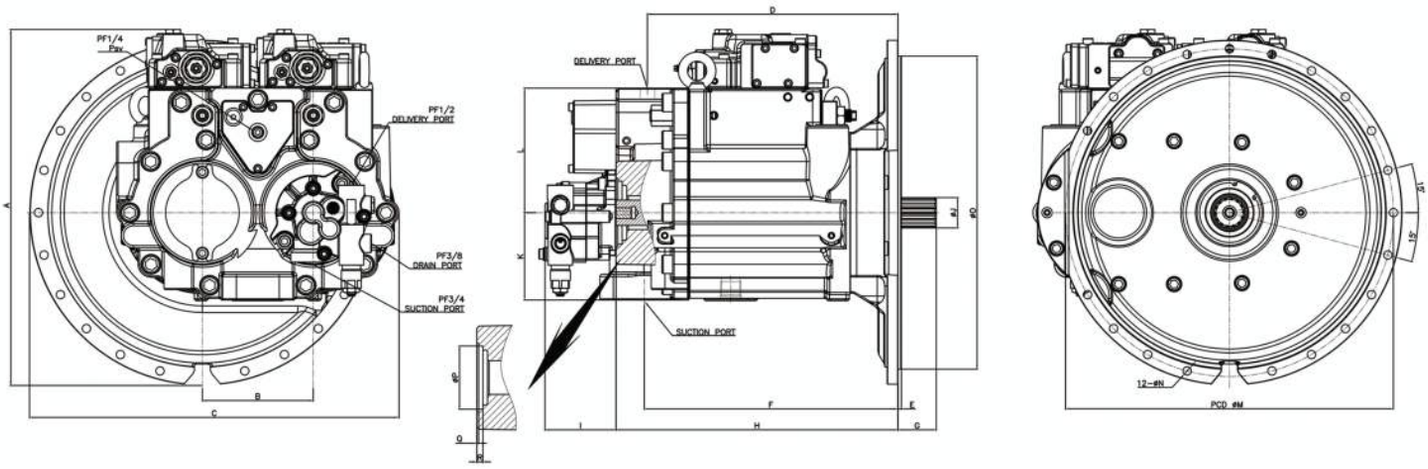

DIMENSIONS

(mm)

MODEL	A	B	C	D	E	F	G	H	I	J	K	L	M	N	O	P	Q	R
H3V112DP (FOR SANY CRANE) SC500	465.5	145	483	387	4.5	391	50	368.5	93	39.5	114	163	428.6	11	409.5	82.55	2.4	8

H3V112DP FOR KOBELCO / NEW HOLLAND WITH EPR PARALLEL TYPE SWASH PLATE PISTON PUMP

SPECIFICATIONS(FOR 9S00 TYPE)

MODEL	H3V112DP(KOBELCO / NEW HOLLAND)
Discharge Rate(cc/rev)	112
Max. Pressure (kg/cm²)	350
Max. Speed (rpm)	2,000

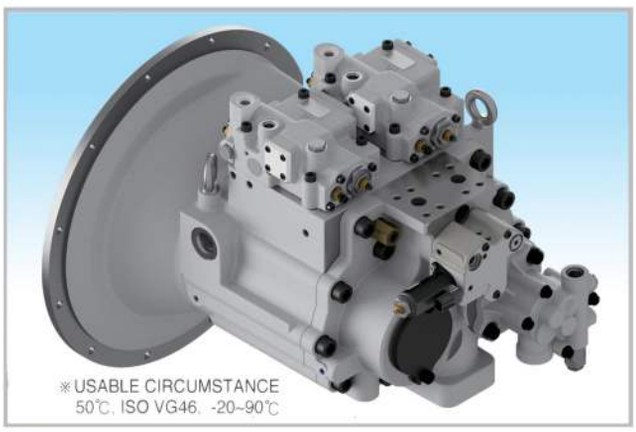

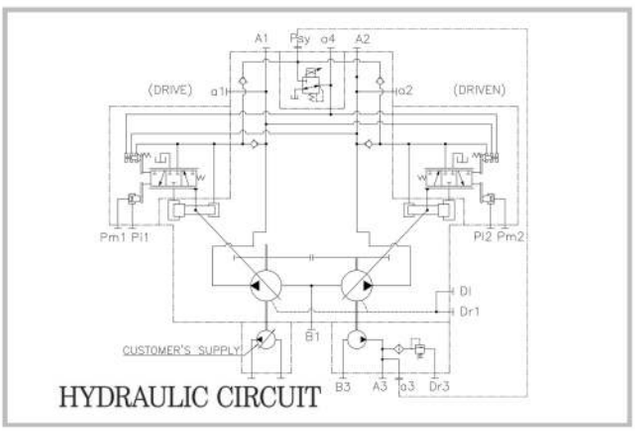

Dimensions of Shaft End(Spline Type)

MODEL	No. of teeth	Pitch circle dia(mm)	Module	Pressure angle	Standard
H3V112DP (KOBELCO / NEW HOLLAND)	14	35	2.5	20°	JIS B 1603 :1995

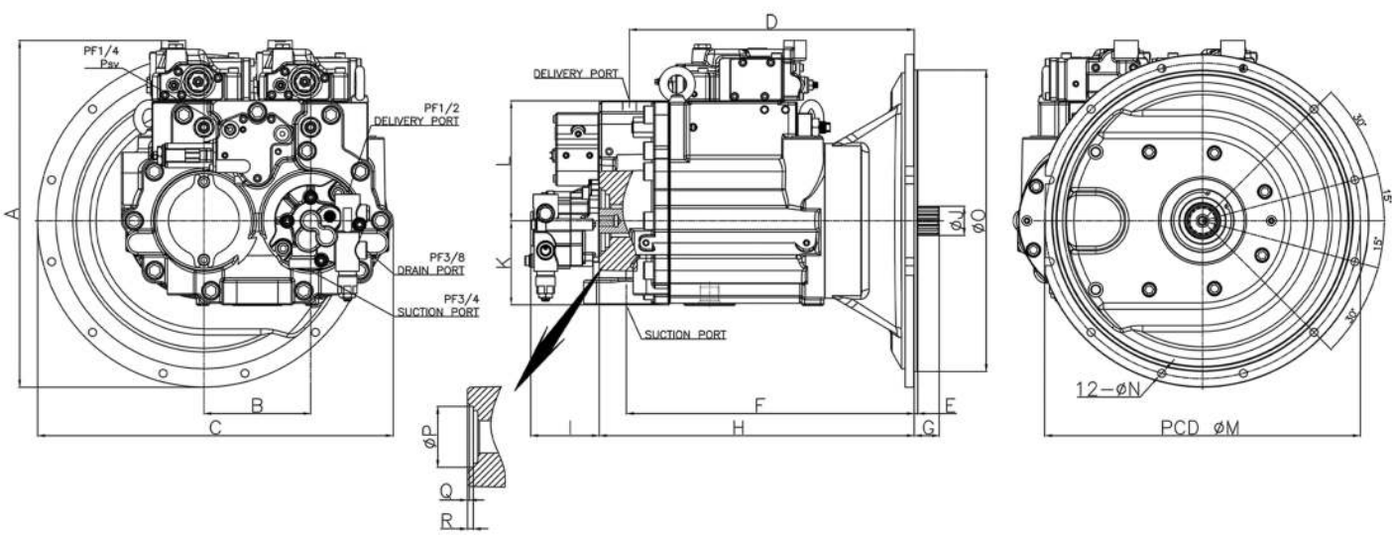

DIMENSIONS

(mm)

MODEL	A	B	C	D	E	F	G	H	I	J	K	L	M	N	O	P	Q	R
H3V112DP (KOBELCO / NEW HOLLAND)	471	145	483	387	4.5	391	34	428	93	39.5	114	163	428.6	11	409.5	82.6	2.4	8

H3V112DP FOR KOBELCO / NEW HOLLAND WITHOUT EPR
PARALLEL TYPE SWASH PLATE PISTON PUMP

SPECIFICATIONS(FOR 9S00 TYPE)

MODEL	H3V112DP(KOBELCO / NEW HOLLAND)
Discharge Rate(cc/rev)	112
Max. Pressure (kg/cm²)	350
Max. Speed (rpm)	2,000

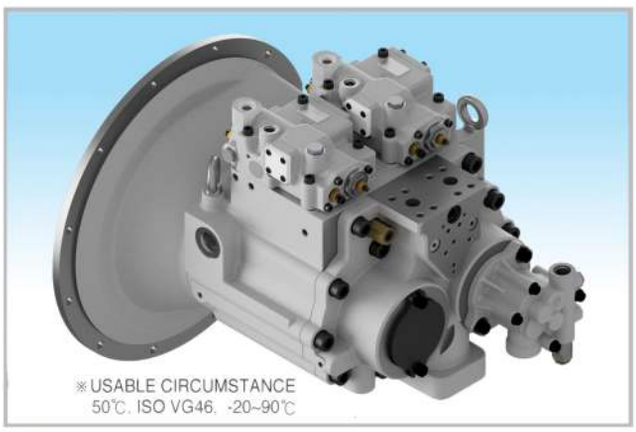

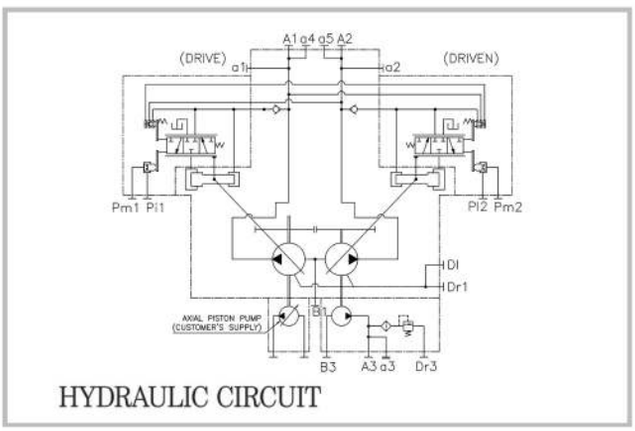

Dimensions of Shaft End(Spline Type)

MODEL	No. of teeth	Pitch circle dia(mm)	Module	Pressure angle	Standard
H3V112DP (KOBELCO / NEW HOLLAND)	14	35	2.5	20°	JIS B 1603 :1995

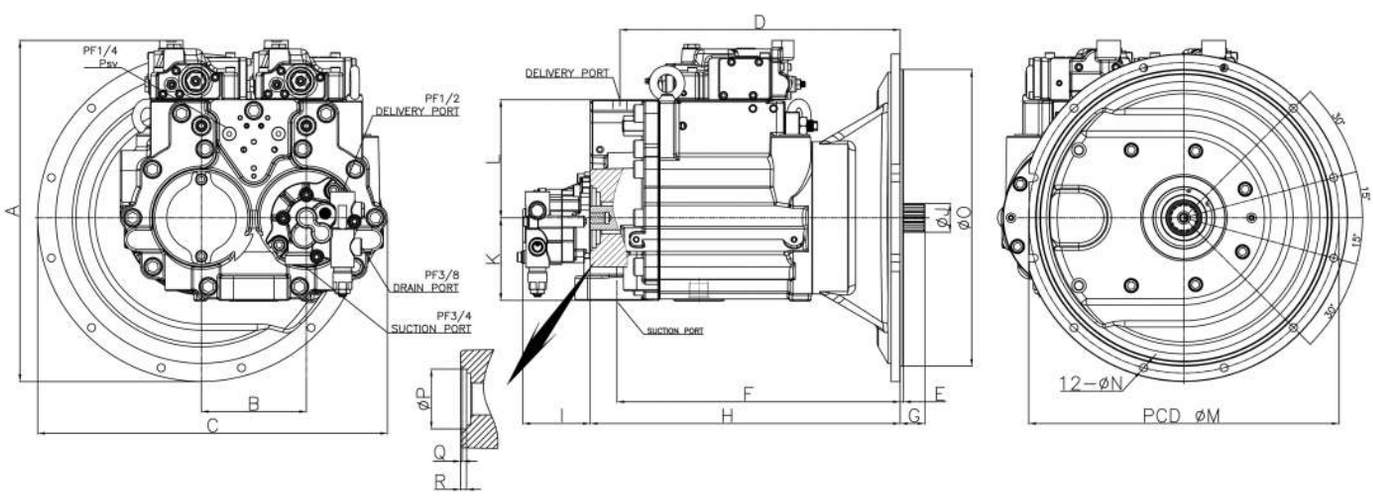

DIMENSIONS

(mm)

MODEL	A	B	C	D	E	F	G	H	I	J	K	L	M	N	O	P	Q	R
H3V112DP (KOBELCO / NEW HOLLAND)	471	145	483	387	4.5	391	34	428	93	39.5	114	163	428.6	11	409.5	82.6	2.4	8

H5V160DP FOR NORMAL TYPE
PARALLEL TYPE SWASH PLATE PISTON PUMP

SPECIFICATIONS(FOR 9N00 / 9P00 TYPE)

MODEL	H5V160DP (FOR NORMAL TYPE)
Discharge Rate(cc/rev)	160
Max. Pressure (kg/cm²)	350
Max. Speed (rpm)	2,350

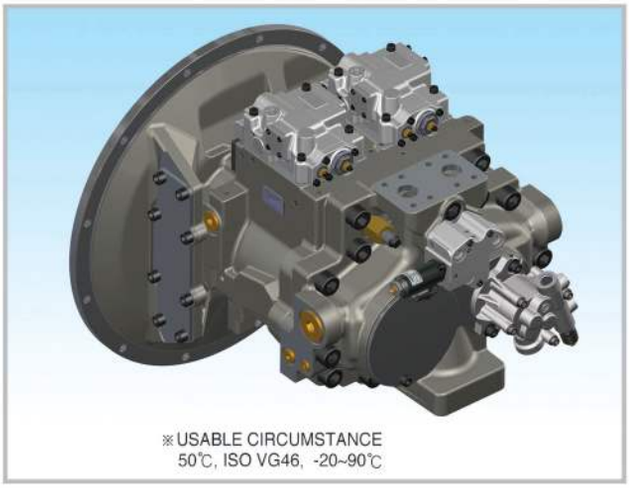

※USABLE CIRCUMSTANCE
50℃, ISO VG46, -20~90℃

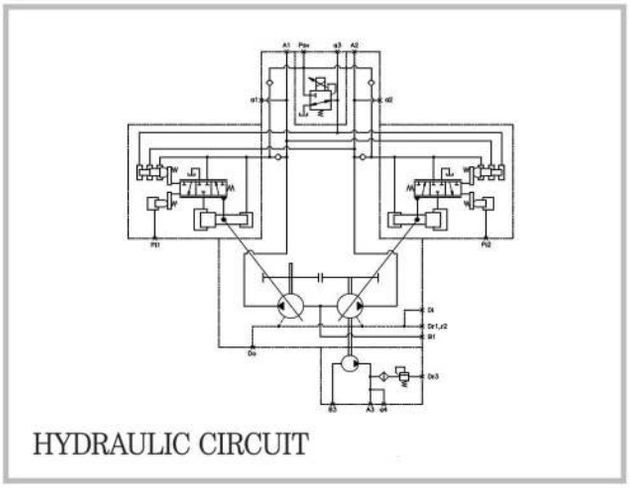

HYDRAULIC CIRCUIT

Dimensions of Shaft End(Spline Type)

MODEL	No. of teeth	Pitch Circle Dia(mm)	Module	Pressure Angle	Standard
H5V160DP (FOR NORMAL TYPE)	15	47.625	8/16	30°	ANSI B92.1b :1970

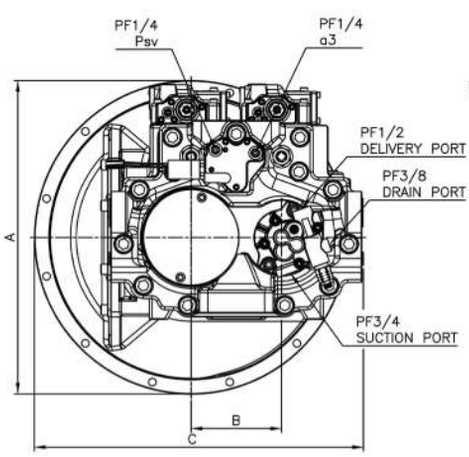

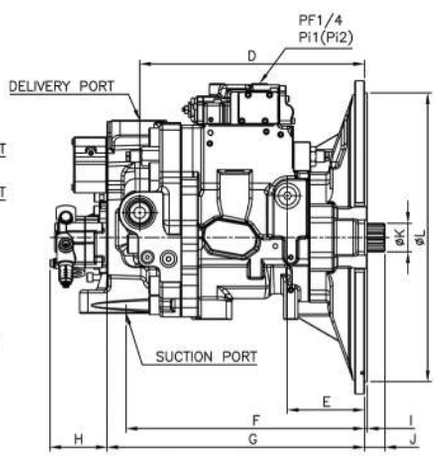

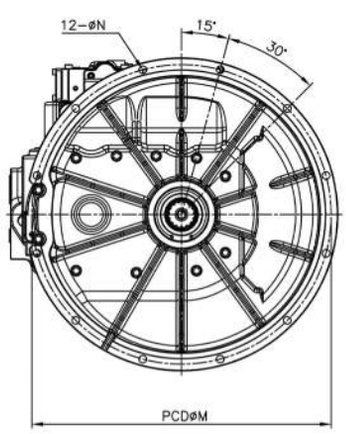

DIMENSIONS

(mm)

MODEL	A	B	C	D	E	F	G	H	I	J	K	L	M	N
H5V160DP (FOR NORMAL TYPE)	555	160	582.5	398	136.5	422	456	93	5	34.5	50.8	511	530	13.5

H5V160DP FOR CATERPILLAR
PARALLEL TYPE SWASH PLATE PISTON PUMP

SPECIFICATIONS(FOR 2N00 / 9N00 / 9P00 / 9S00 TYPE)

MODEL	H5V160DP FOR CATERPILLAR
Discharge Rate(cc/rev)	160
Max. Pressure (kg/cm²)	350
Max. Speed (rpm)	2,350

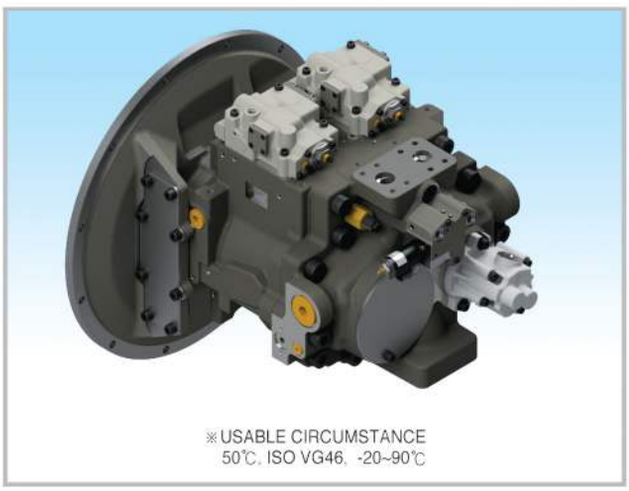

※USABLE CIRCUMSTANCE
50℃, ISO VG46, -20~90℃

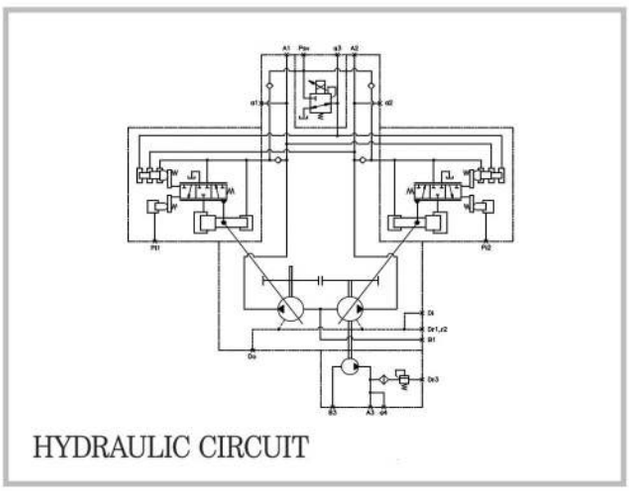

HYDRAULIC CIRCUIT

Dimensions of Shaft End(Spline Type)

MODEL	No of teeth	Pitch circle dia(mm)	Module	Pressure angle	Standard
H5V160DP FOR CATERPILLAR	15	47.625	8/16	30°	ANSI B92.1b :1970

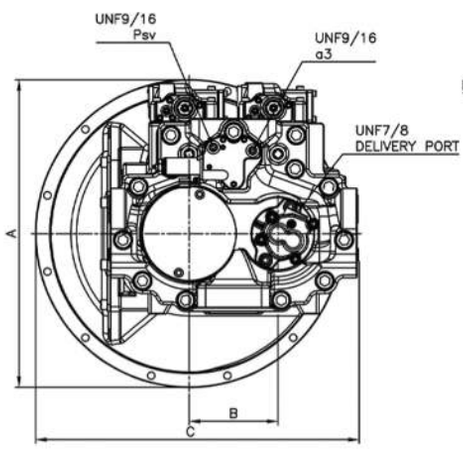

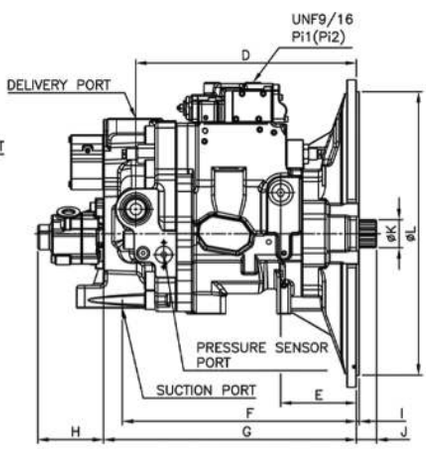

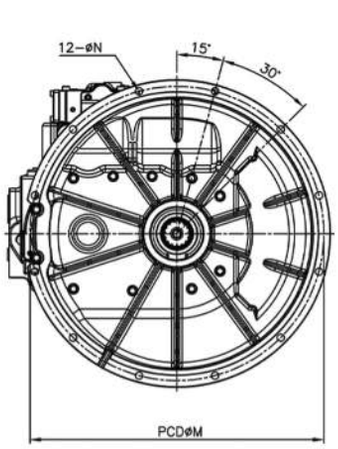

DIMENSIONS

(mm)

MODEL	A	B	C	D	E	F	G	H	I	J	K	L	M	N
H5V160DP FOR CATERPILLAR	555	160	582.5	398	136.5	422	456	118.5	5	34.5	50.8	511	530	13.5

H5V200DPH FOR HITACHI
PARALLEL TYPE SWASH PLATE PISTON PUMP

SPECIFICATIONS (FOR OE02-NORMAL & HITACHI)

MODEL	H5V200DPH (FOR HITACHI)
Discharge Rate (cc/rev)	200
Max. Pressure (kg/cm²)	350
Max. Speed (rpm)	1900

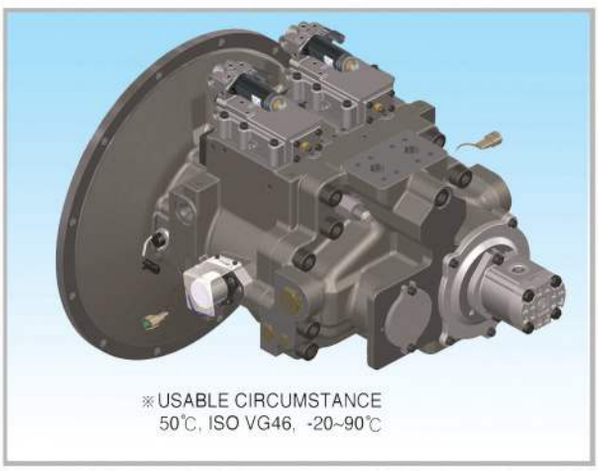

※USABLE CIRCUMSTANCE
50℃, ISO VG46, -20~90℃

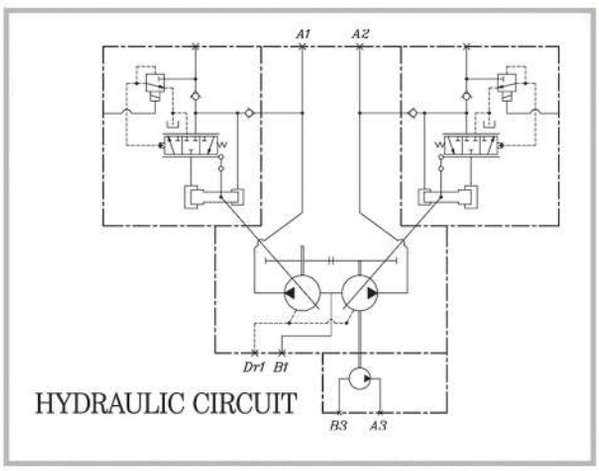

HYDRAULIC CIRCUIT

Dimensions of Shaft End(Spline Type)

MODEL	No. of teeth	Pitch Circle Dia(mm)	Module	Pressure Angle	Standard
H5V200DPH (FOR HITACHI)	17	42.5	2.5	20 °	JIS B 1603 : 1995

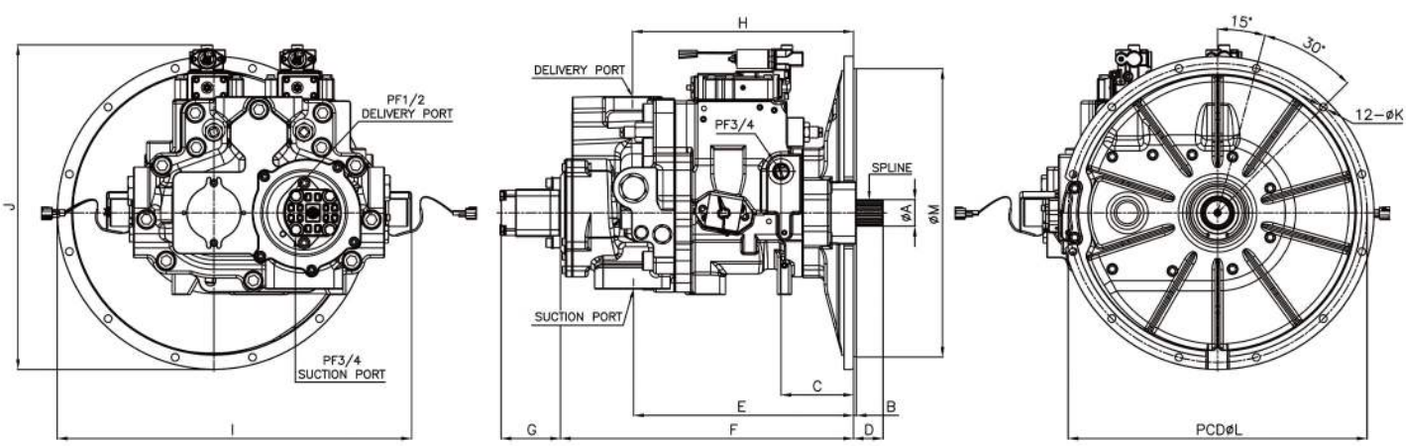

DIMENSIONS

(mm)

MODEL	A	B	C	D	E	F	G	H	I	J	K	L	M
H5V200DPH (FOR HITACHI)	47	5	129	52.4	390	520	105	390	628	575	13.5	530	508 (SAE J617 NO.2)
													511 (SAE J617 NO.1)
		6										428.6	409.58 (SAE J617 NO.3)

H5V200DPH
PARALLEL TYPE SWASH PLATE PISTON PUMP

SPECIFICATIONS(FOR 9N00 / 9P00 / 9S00 / ZX00 TYPE)

MODEL	H5V200DPH
Discharge Rate (cc/rev)	200
Max. Pressure (kg/cm²)	350
Max. Speed (rpm)	1900

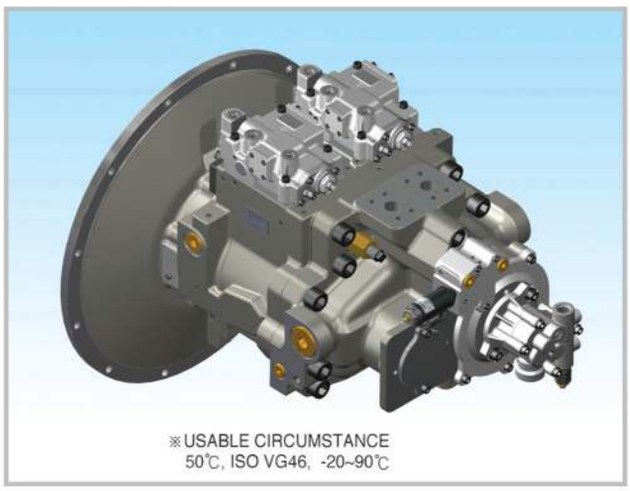

※USABLE CIRCUMSTANCE
50℃, ISO VG46, -20~90℃

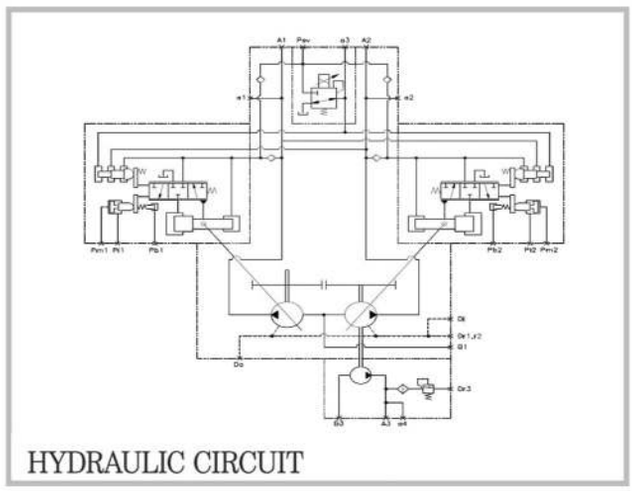

HYDRAULIC CIRCUIT

Dimensions of Shaft End(Spline Type)

MODEL	No. of teeth	Pitch Circle Dia(mm)	Module	Pressure Angle	Standard
H5V200DPH	17	42.5	2.5	20°	JIS B 1603 : 1995

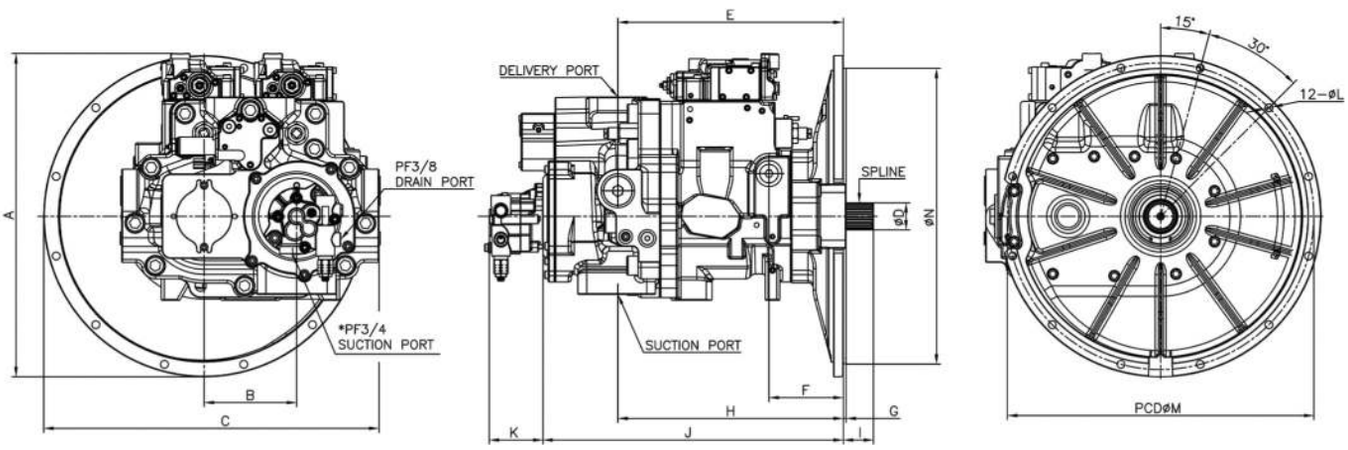

DIMENSIONS

(mm)

MODEL	A	B	C	D	E	F	G	H	I	J	K	L	M	N
H5V200DPH	559	160	580	47	390	128.5	5	390	52.4	519.6	93	13.5	530	508 511

H5V200DPH FOR HITACHI
PARALLEL TYPE SWASH PLATE PISTON PUMP

SPECIFICATIONS (FOR OE02-NORMAL & HITACHI)

MODEL	H5V200DPH (FOR HITACHI)
Discharge Rate (cc/rev)	200
Max. Pressure (kg/cm²)	350
Max. Speed (rpm)	1900

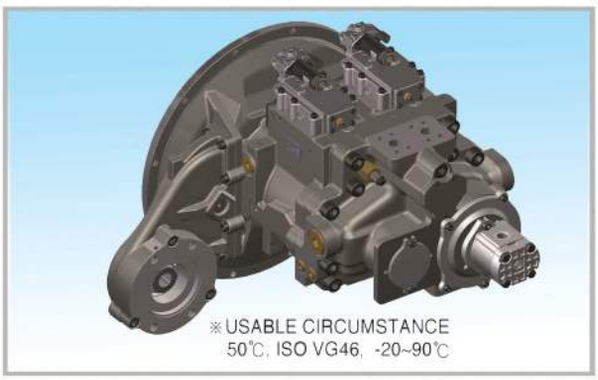

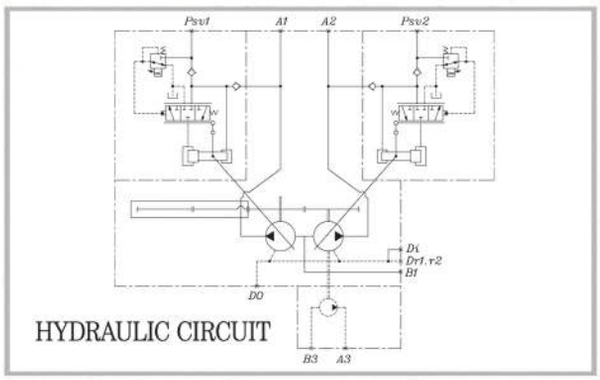

Dimensions of Shaft End(Spline-A)

MODEL	No. of teeth	Pitch Circle Dia(mm)	Module	Pressure Angle	Standard
H5V200DPH(FOR HITACHI)	15	47.625	8/16	30°	ANSI B92.1B:1970

Dimensions of Shaft End(Spline-B)

MODEL	No. of teeth	Pitch Circle Dia(mm)	Module	Pressure Angle	Standard
H5V200DPH (FOR HITACHI)	14	29.63	12/24	30°	SAE J744

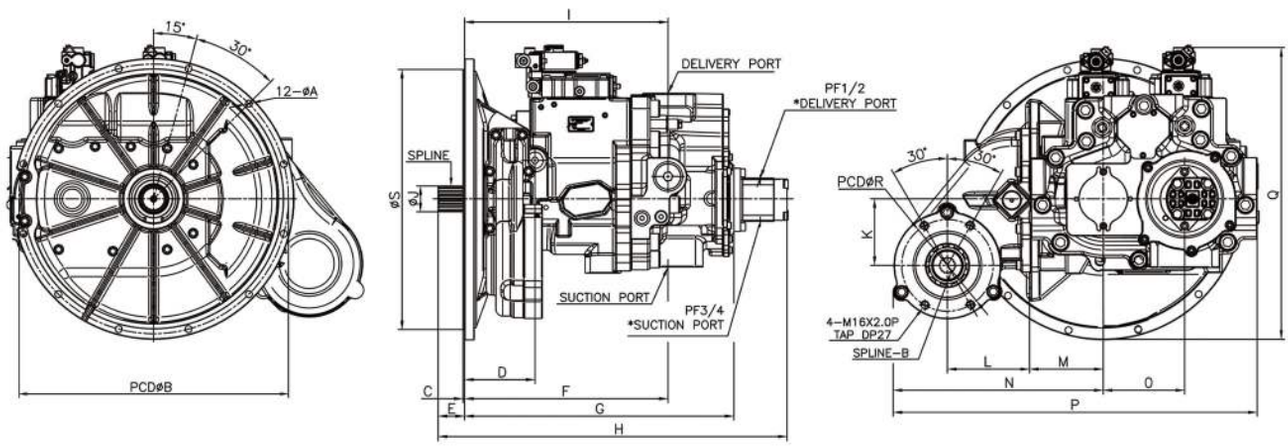

DIMENSIONS

(mm)

MODEL	A	B	C	D	E	F	G	H	I	J	K	L	M	N	O	P	Q	R	S
H5V200DPH (FOR HITACHI)	13.5	530	3	138.5	52	400	529.6	686	400	50.6	103.7	161	145	413	160	716	574	180	508 (SAE J617 NO.2)
																			511 (SAE J617 NO.1)
		428.62	6																409.58 (SAE J617 NO.3)

H5V212DPH
PARALLEL TYPE SWASH PLATE PISTON PUMP

SPECIFICATIONS(FOR 2N00 / 9N00 / 9P00 / 9S00 TYPE)

MODEL	H5V212DPH
Discharge Rate(cc/rev)	212
Max. Pressure (kg/cm²)	350
Max. Speed (rpm)	1,800

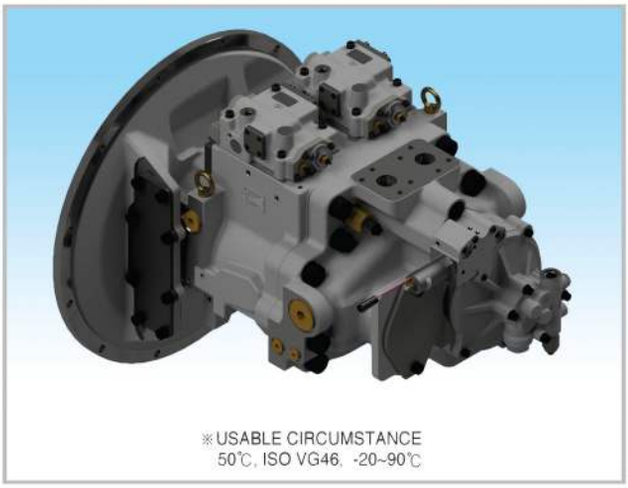

※USABLE CIRCUMSTANCE
50℃, ISO VG46, -20~90℃

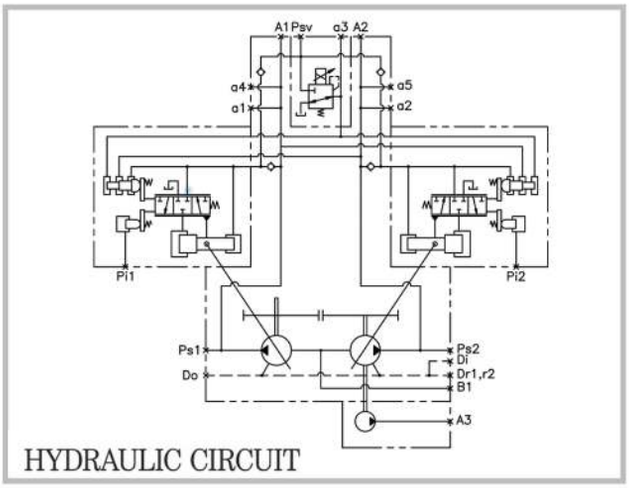

HYDRAULIC CIRCUIT

Dimensions of Shaft End(Spline Type)

MODEL	No of teeth	Pitch circle dia(mm)	Module	Pressure angle	Standard
H5V212DPH	15	47.625	8/16	30°	ANSI B92.1b :1970
	17	53.975	8/16	30°	ANSI B92.1b :1970

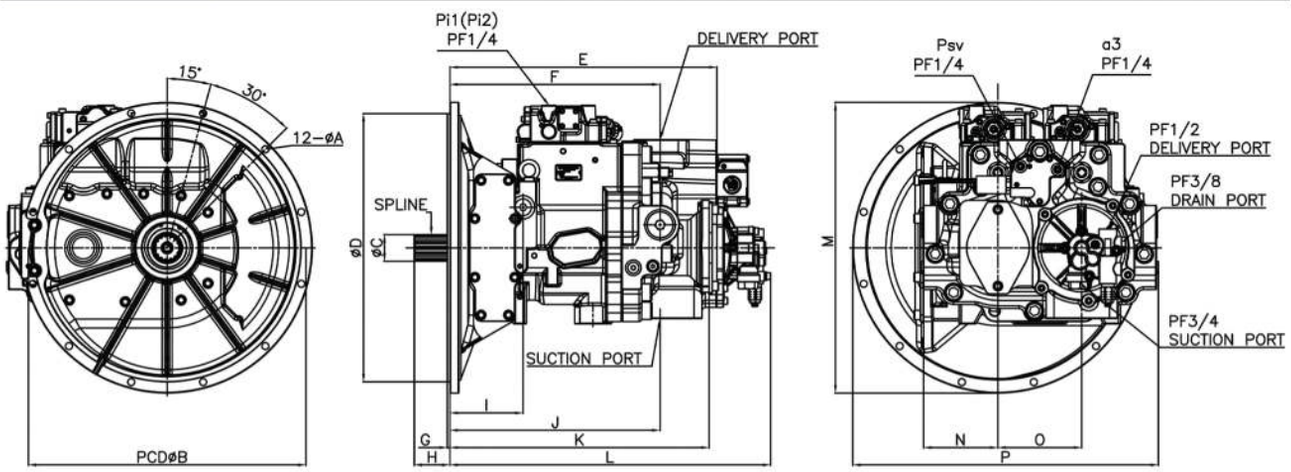

DIMENSIONS

(mm)

MODEL	A	B	C	D	E	F	G	H	I	J	K	L	M	N	O	P
H5V212DPH	13.5	530	50.7 57.15	511	590.5	401	5	68.5	139.5	401	494.5	612	554	141.8	160	583.5

H5V212DPH
PARALLEL TYPE SWASH PLATE PISTON PUMP

SPECIFICATIONS (FOR OE02-NORMAL & HITACHI)

MODEL	H5V212DPH
Discharge Rate(cc/rev)	212
Max. Pressure (kg/cm²)	350
Max. Speed (rpm)	1,800

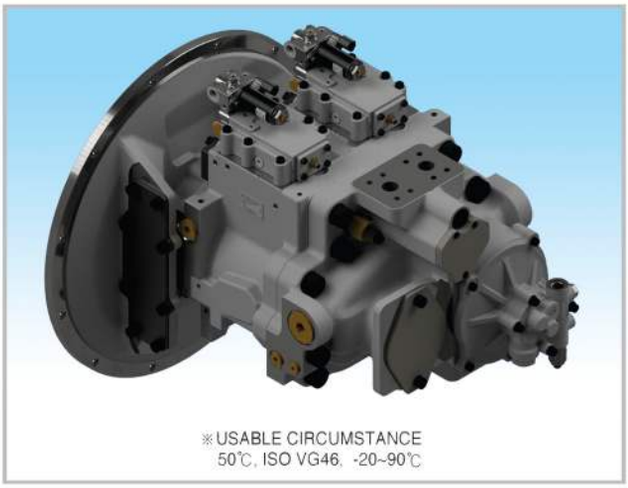

※USABLE CIRCUMSTANCE
50℃, ISO VG46, -20~90℃

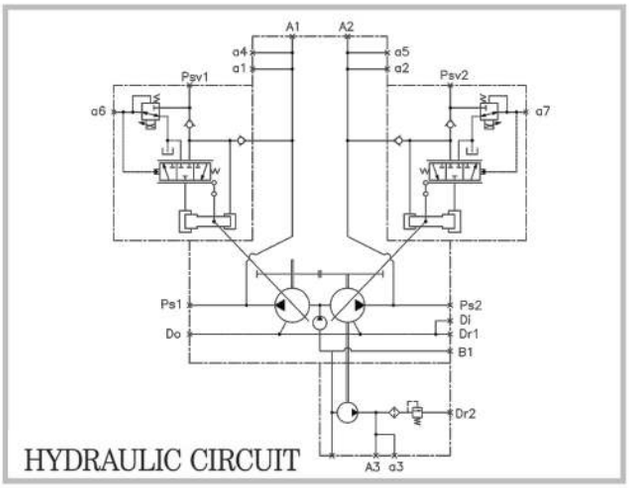

HYDRAULIC CIRCUIT

Dimensions of Shaft End(Spline Type)

MODEL	No of teeth	Pitch circle dia(mm)	Module	Pressure angle	Standard
H5V212DPH	15	47.625	8/16	30°	ANSI B92.1b :1970
	17	53.975	8/16	30°	ANSI B92.1b :1970

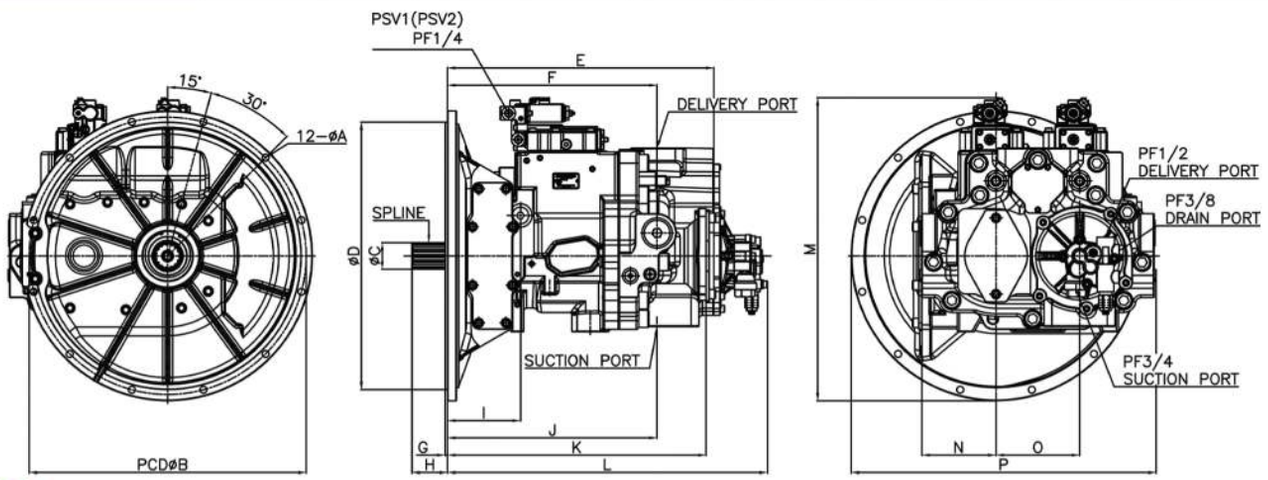

DIMENSIONS

(mm)

MODEL	A	B	C	D	E	F	G	H	I	J	K	L	M	N	O	P
H5V212DPH	13.5	530	50.7 57.15	511	590.5	401	5	68.5	139.5	401	494.5	612	579.3	141.8	160	583.5

H5V212DPH FOR CATERPILLAR
PARALLEL TYPE SWASH PLATE PISTON PUMP

SPECIFICATIONS (FOR 9N00 / 9P00 TYPE)

MODEL	H5V212DPH FOR CATERPILLAR
Discharge Rate(cc/rev)	212
Max. Pressure (kg/cm²)	350
Max. Speed (rpm)	1,800

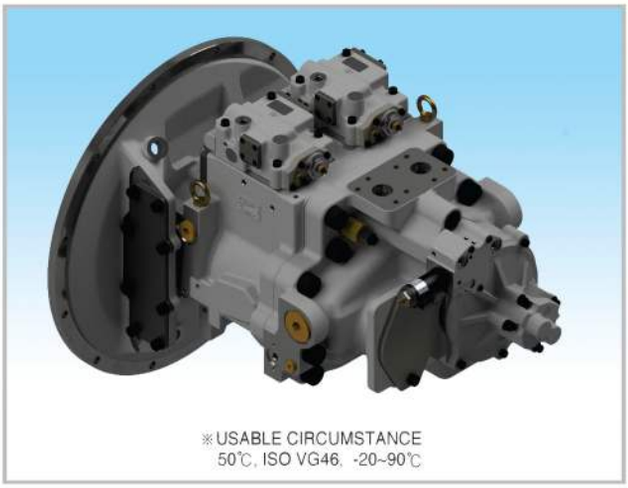

※USABLE CIRCUMSTANCE
50℃, ISO VG46, -20~90℃

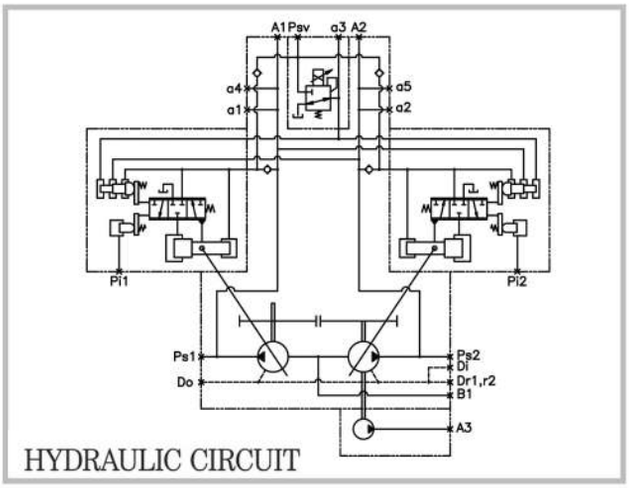

HYDRAULIC CIRCUIT

Dimensions of Shaft End(Spline Type)

MODEL	No of teeth	Pitch circle dia(mm)	Module	Pressure angle	Standard
H5V212DPH FOR CATERPILLAR	15	47.625	8/16	30°	ANSI B92.1b :1970

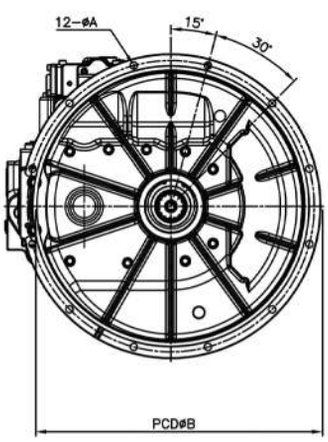

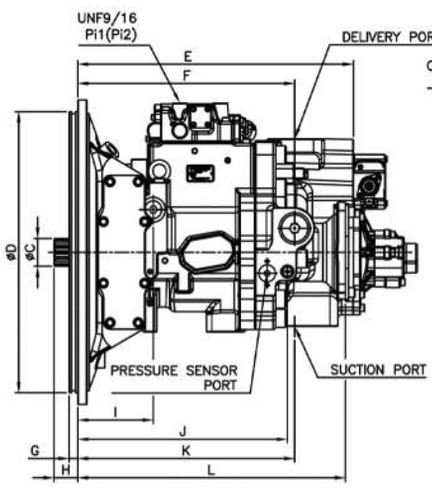

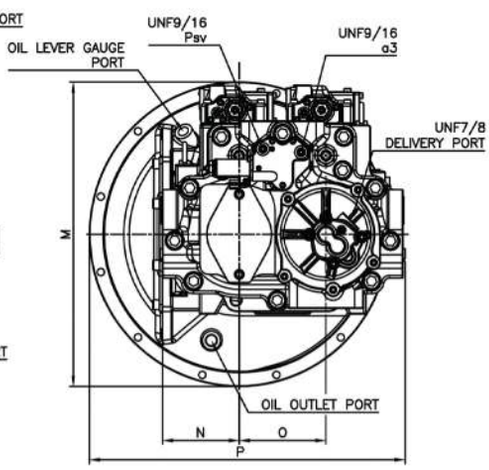

DIMENSIONS

(mm)

MODEL	A	B	C	D	E	F	G	H	I	J	K	L	M	N	O	P
H5V212DPH FOR CATERPILLAR	13.5	530	50.7	511	590.5	401	16	44	139.5	401	494.5	628	554	141.8	160	583.5

H5V212DPH FOR VOLVO
PARALLEL TYPE SWASH PLATE PISTON PUMP

SPECIFICATIONS (FOR OE02 TYPE)

MODEL	H5V212DPH FOR VOLVO
Discharge Rate(cc/rev)	212
Max. Pressure (kg/cm²)	350
Max. Speed (rpm)	1800

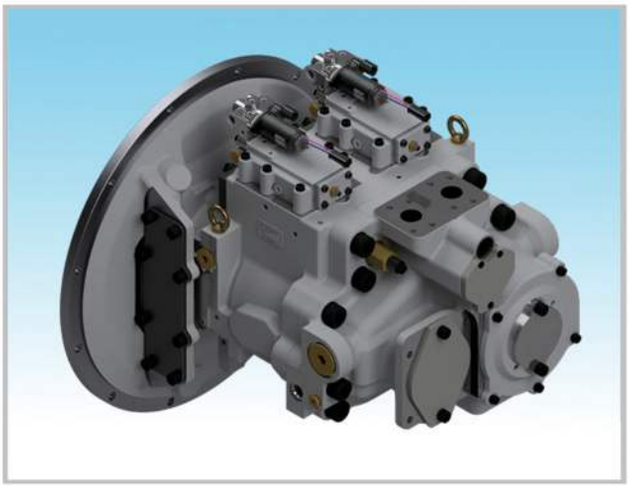

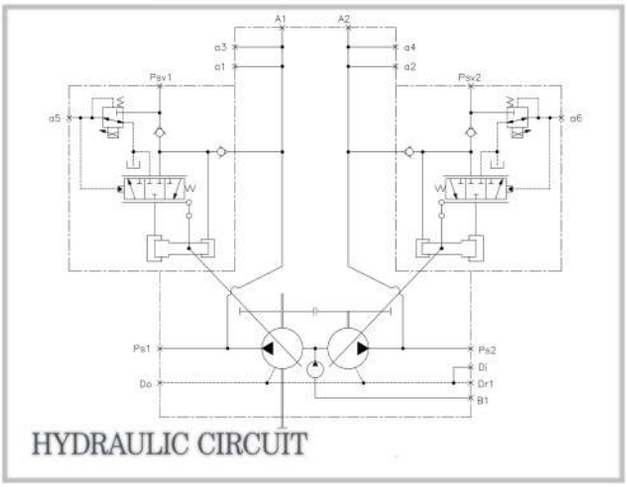

HYDRAULIC CIRCUIT

Dimensions of Shaft End(Spline Type)

MODEL	No of teeth	Pitch circle dia(mm)	Module	Pressure angle	Standard
H5V212DPH FOR VOLVO	15	47.625	8/16	30°	ANSI B92.1b : 1970

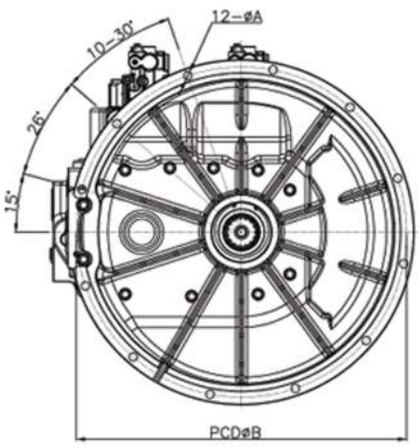

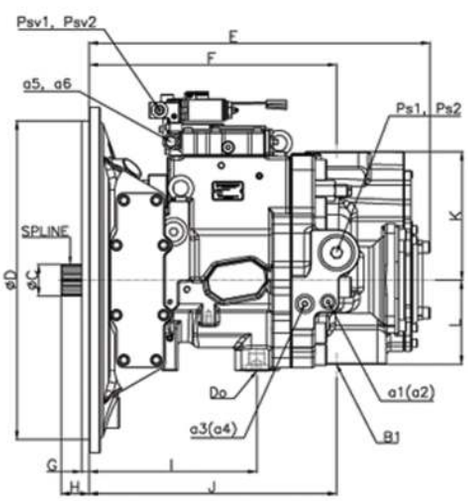

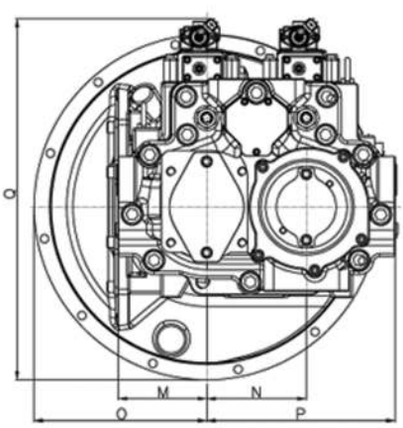

DIMENSIONS

(mm)

MODEL	A	B	C	D	E	F	G	H	I	J	K	L	M	N	O	P	Q
H5V212DPH FOR VOLVO	13.5	530	50.7	511	546.5	397	12	45	269	397	206	135	141.8	160	277	302.5	579

H5V212DPHD FOR DOOSAN
PERALLEL TYPE SWASH PLATE PISTON PUMP
H5V212DPHD can be applied on DX500LC-7&DX520LC-7 instead of A8VO215

SPECIFICATIONS

MODEL	H5V212DPHD (DX500LC-7 & DX520LC-7)
Discharge Rate (cc/rev)	212
Max. Pressure (kg/cm²)	350
Max. Speed (rpm)	1800

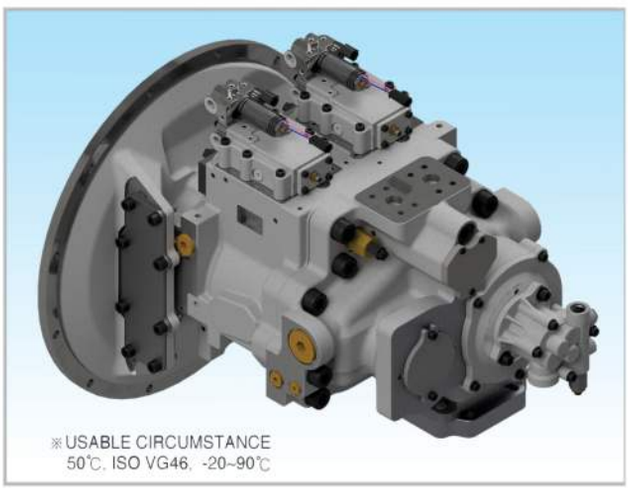

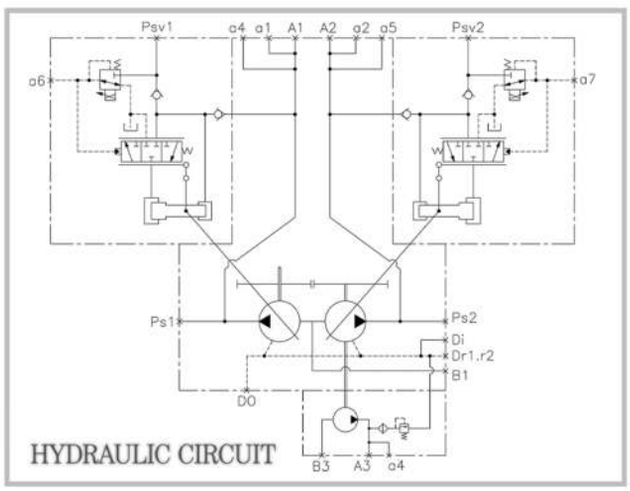

Dimensions of Shaft End(Spline Type)

MODEL	No.of teeth	Pitch circle dia(mm)	Module	Pressure angle	Standard
H5V212DPHD (DX500LC-7 & DX520LC-7)	24	35	2.0	30°	DIN 5480

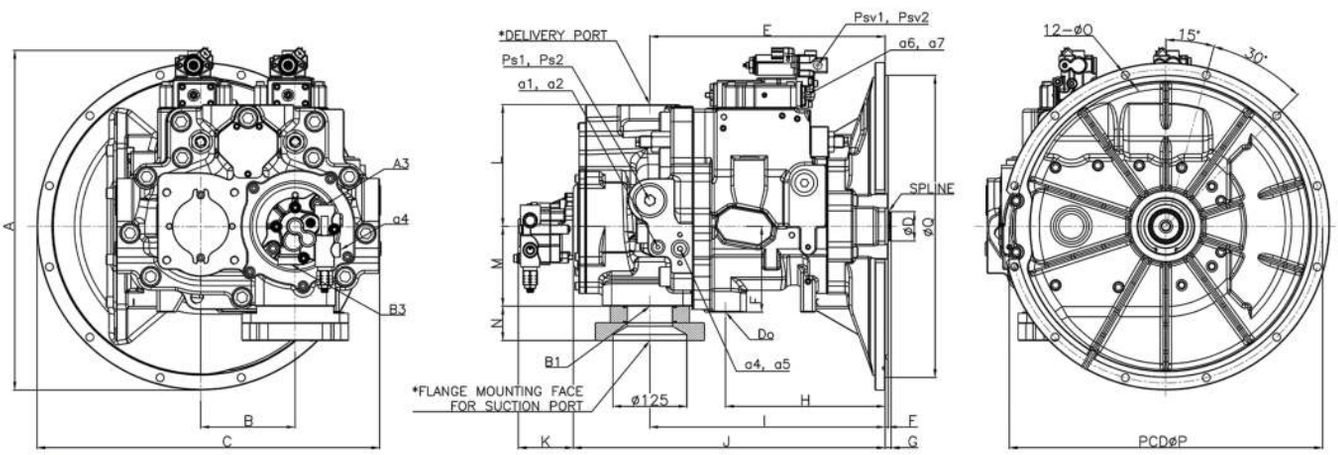

DIMENSIONS

(mm)

MODEL	A	B	C	D	E	F	G	H	I	J	K	L	M	N	O	P	Q
H5V200DPHD (DX500LC-7 & DX520LC-7)	574.6	160	580	49.5	398	5	10	273	398	528	93	206	135	58	13.5	530	511 (SAE J617 NO.1)

H3V140DTPK FOR KOMATSU

H3V140DTPK can be applied on PC300-6, 310-6, 330-6, 350-6 instead of HPV132C PUMPS

SPECIFICATIONS (FOR 3L09 TYPE)

MODEL	H3V140DTPK (PC300-6, 310-6, 330-6, 350-6)
Discharge Rate (cc/rev)	140
Max. Pressure (kg/cm²)	350
Max. Speed (rpm)	2500

Dimensions of Shaft End(Spline Type)

MODEL	No. of teeth	Pitch circle dia(mm)	Module	Pressure angle	Standard
H3V140DTPK (PC300-6, PC310-6) (PC330-6, PC350-6)	22	55	2.5	20°	JIS B 1603 :1995

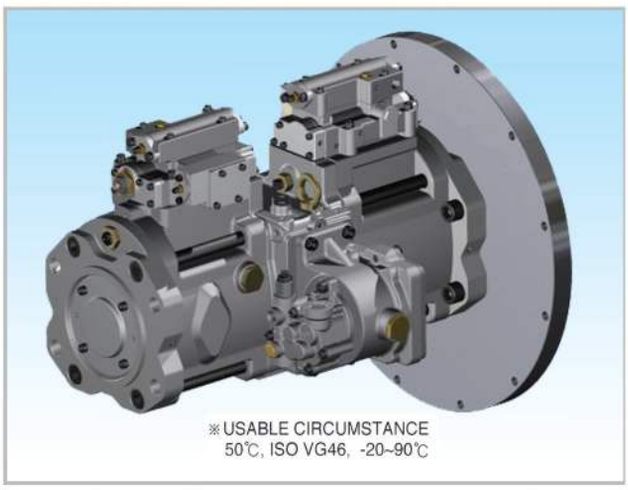

※USABLE CIRCUMSTANCE
50℃, ISO VG46, -20~90℃

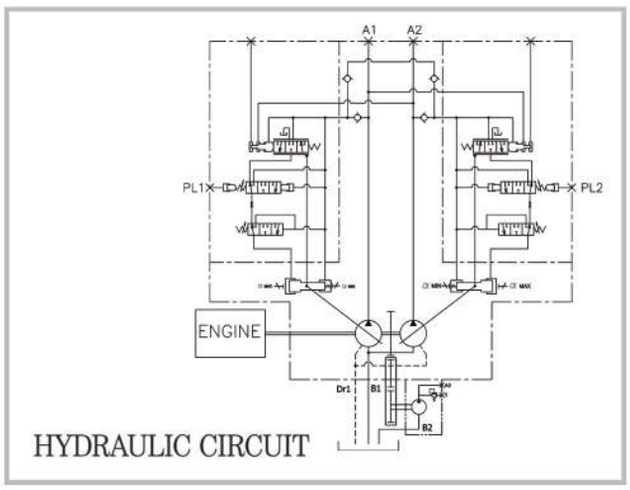

HYDRAULIC CIRCUIT

Flange Mounting face for Suction Port

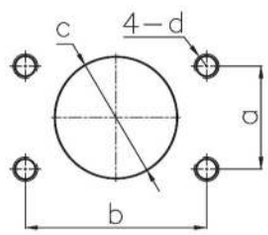

(mm)

a	61.9
b	106.4
c	Ø76
d	M16X2.0P DP25

Flange Mounting face for Delivery Port

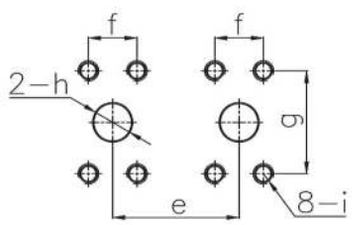

(mm)

e	84
f	27.8
g	57.2
h	Ø25
i	M12X1.75P Dp23

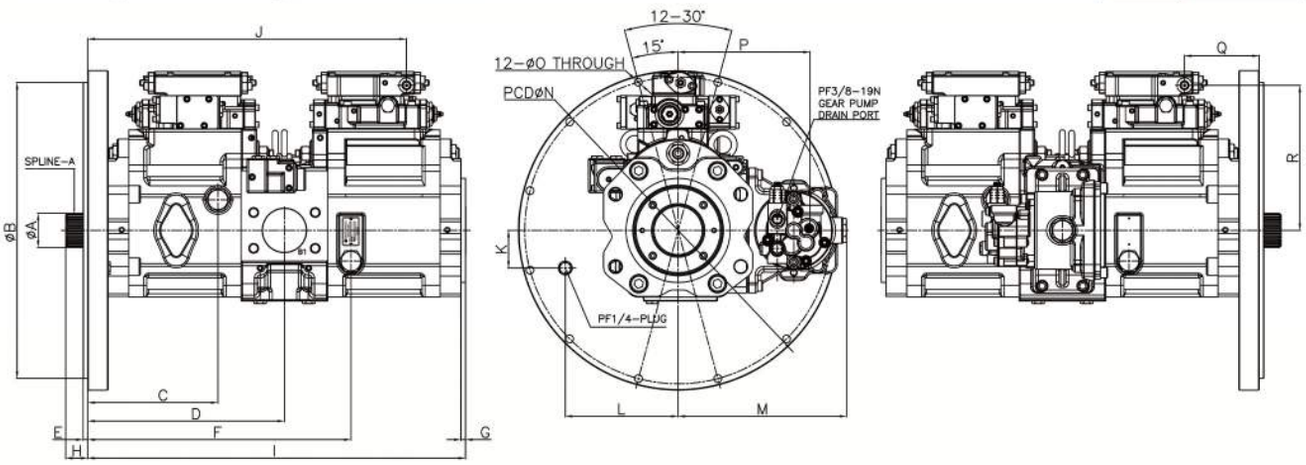

DIMENSIONS

(mm)

MODEL	A	B	C	D	E	F	G	H	I	J	K	L	M	N	O	P	Q	R
H3V140DTPK (PC300-6, PC310-6) (PC330-6, PC350-6)	59.2	511.2	225	340	8	455	8	38	653	551	65	195	291	530.2	13.5	228	129	251

H3V140DTK FOR KOMATSU

H3V140DTK can be applied on PC300-7/8, 310-7/8, 320-7/8, 330-7/8, 350-7/8 instead of HPV140 PUMPS

SPECIFICATIONS (FOR 3L00 TYPE)

MODEL	H3V140DTK (PC300-7/8, 310-7/8, 320-7/8, 330-7/8, 350-7/8)
Discharge Rate(cc/rev)	160
Max. Pressure	350
Max. Speed (rpm)	2150

Dimensions of Shaft End(Spline Type)

MODEL	No. of teeth	Pitch circle dia(mm)	Module	Pressure angle	Standard
H3V140DTK (PC300-7/8, 310-7/8) (PC320-7/8, 330-7/8) (PC350-7/8)	20	50	2.5	20°	JIS B 1603 :1995

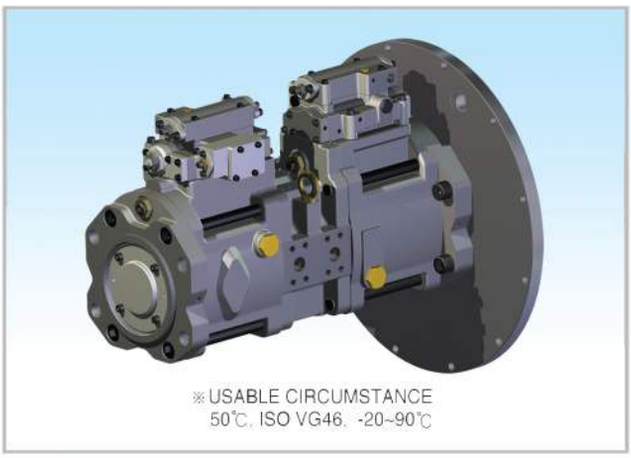

※USABLE CIRCUMSTANCE
50℃, ISO VG46, -20~90℃

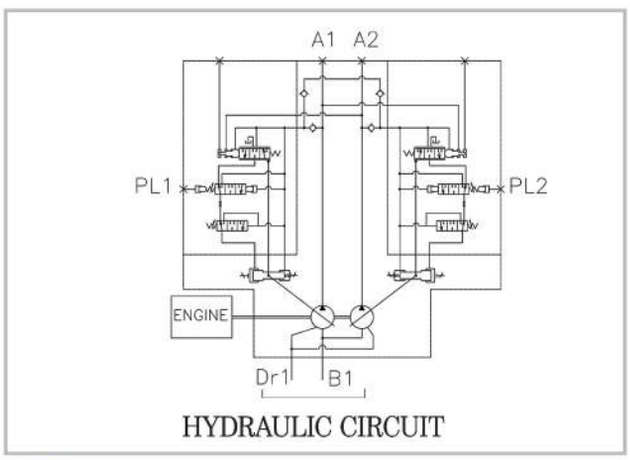

HYDRAULIC CIRCUIT

Flange Mounting face for Suction Port

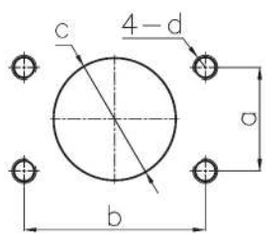

(mm)

a	61.9
b	106.4
c	ø76
d	M16X2.0P DP25

Flange Mounting face for Delivery Port

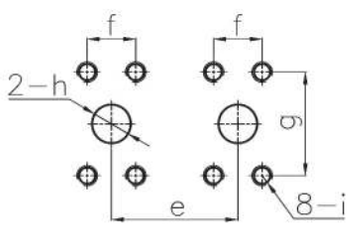

(mm)

e	76
f	27.8
g	57.2
h	ø25
i	M12X1.75P DP23

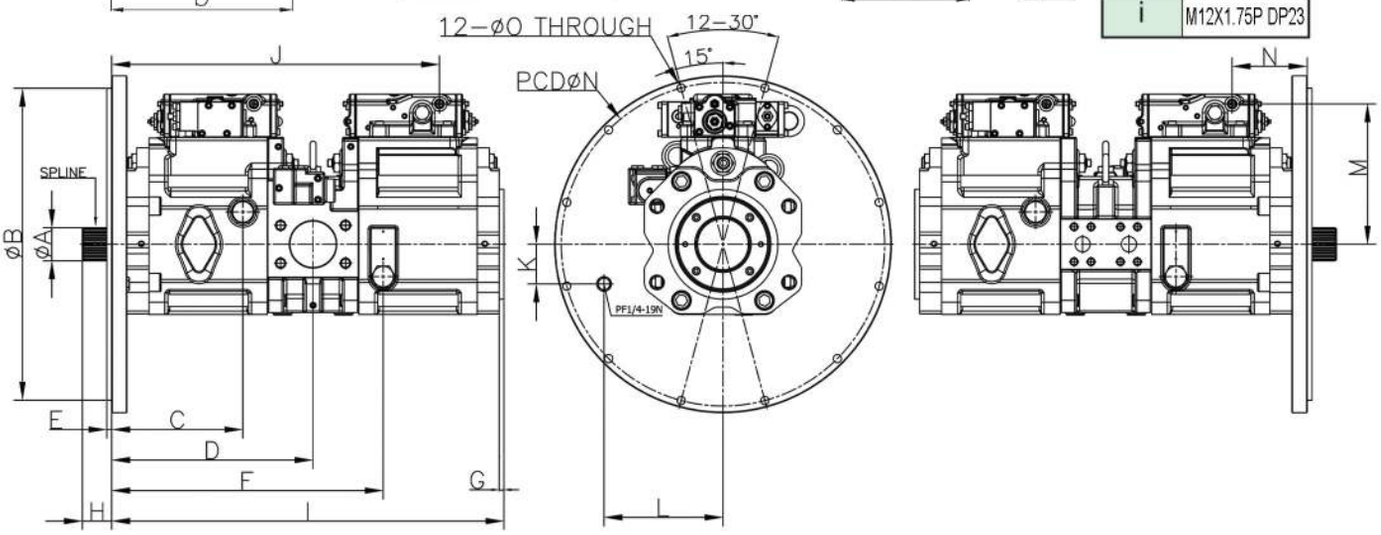

DIMENSIONS

(mm)

MODEL	A	B	C	D	E	F	G	H	I	J	K	L	M	N
H3V140DTK (PC300-7/8, 310-7/8) (PC320-7/8 ,330-7/8) (PC350-7/8)	54.5	511.2	215	330	8	445	8	48	643	541	65	195	251	119

H5V160DPC FOR CATERPILLAR
PARALLEL TYPE SWASH PLATE PISTON PUMP
H5V160DPC can be applied on CAT330L/B instead of A8V0160 PUMP

SPECIFICATIONS (FOR 9N00 / 9P00 TYPE)

MODEL	H5V160DPC(CAT330L/B)
Discharge Rate (cc/rev)	160
Max. Pressure (kg/cm²)	350
Max. Speed(rpm)	2200

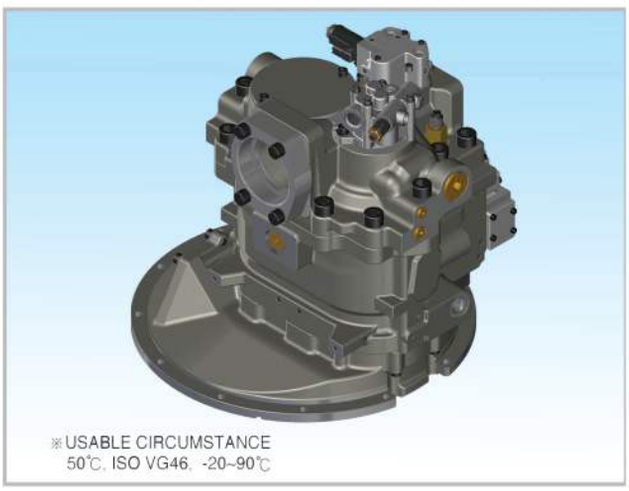

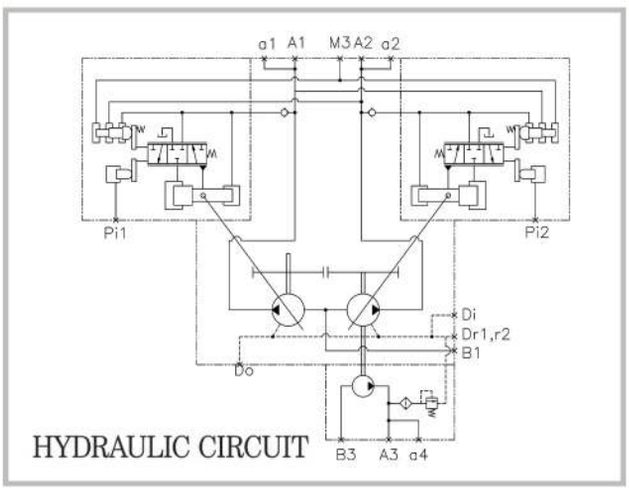

Dimensions of Shaft End(Spline Type)

MODEL	No. of teeth	Pitch Circle Dia(mm)	Module	Pressure Angle	Standard
H5V160DPC (CAT330L/B)	15	45	3.0	20°	JIS B 1603: 1995

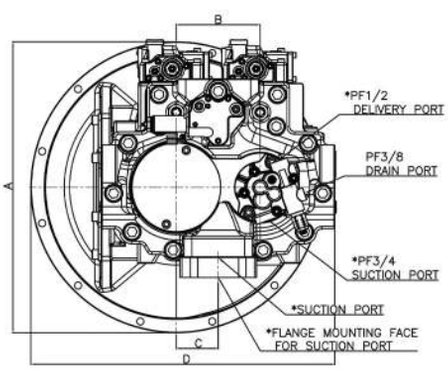

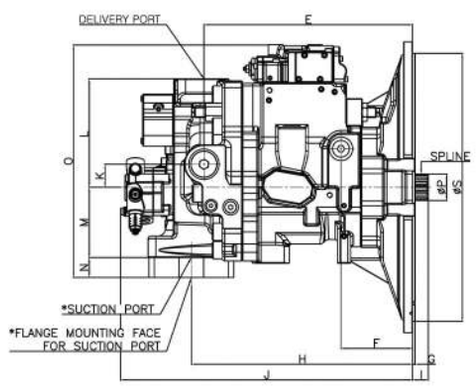

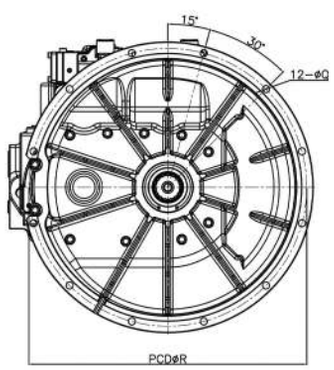

DIMENSIONS

(mm)

MODEL	A	B	C	D	E	F	G	H	I	J	K	L	M	N	O	P	Q	R	S
H5V160DPC (CAT330L/B)	555	160	80	580	398	137	5	422	30	557	44	207	134	38	443	50.4	13.5	530	508 511

H5V200DPC FOR CATERPILLAR
PARALLEL TYPE SWASH PLATE PISTON PUMP
H5V200DPC can be applied on CAT345L/B instead of A8V0200 PUMP

SPECIFICATIONS (FOR 9N00 / 9P00 TYPE)

MODEL	H5V200DPC(CAT 345L/B)
Discharge Rate (cc/rev)	200
Max. Pressure (kg/cm²)	350
Max. Speed (rpm)	2150



※USABLE CIRCUMSTANCE
50℃, ISO VG46, -20~90℃

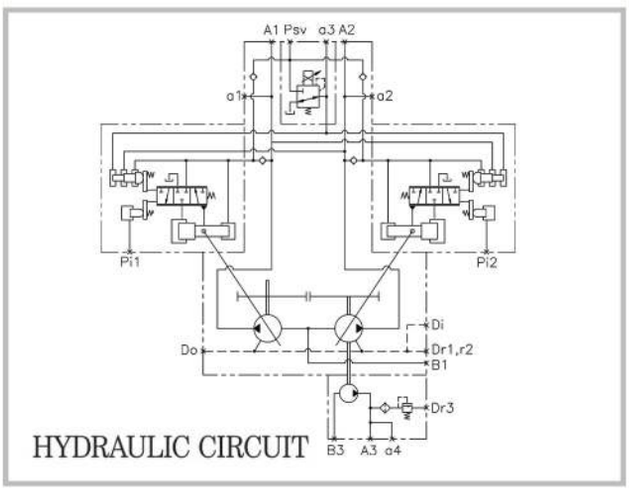

HYDRAULIC CIRCUIT

Dimensions of Shaft End(Spline Type)

MODEL	No. of teeth	Pitch Circle Dia(mm)	Module	Pressure Angle	Standard
H5V200DPC(CAT345L/B)	15	45	3.0	20°	JIS B 1603 :1995

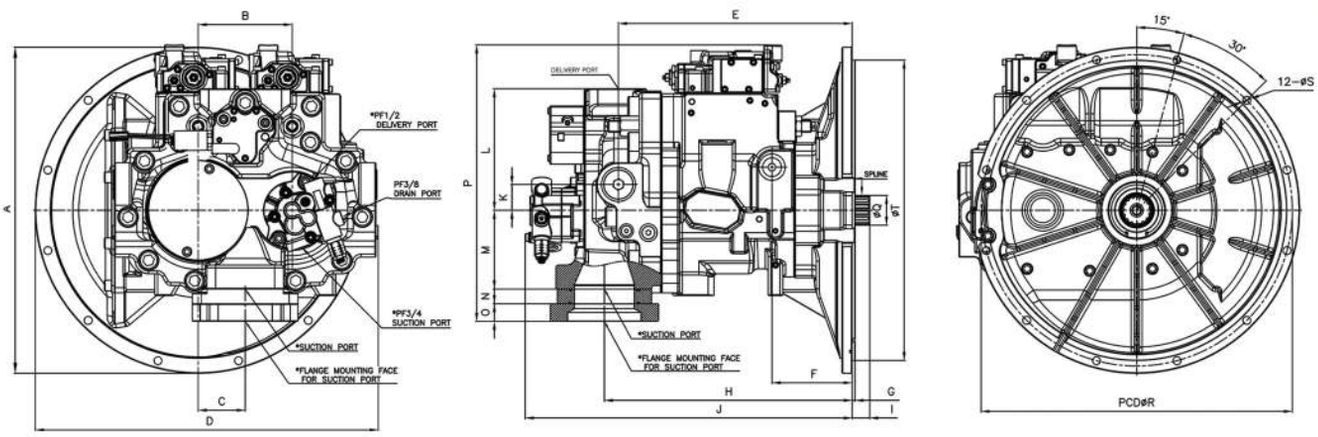

DIMENSIONS

(mm)

MODEL	A	B	C	D	E	F	G	H	I	J	K	L	M	N	O	P	Q	R	S	T
H5V200DPC (CAT345L/B)	555	160	80	584	398	136.5	5	422	30	557	44	207	134	25	30	470.5	50.4	530	13.5	508 511

H5V140DPD FOR DOOSAN
PARALLEL TYPE SWASH PLATE PISTON PUMP
H5V140DPD can be applied on DX330/340/350/380 instead of A8V0140 PUMP

SPECIFICATIONS (FOR 9N00 / 9P00 TYPE)

MODEL	H5V140DPD(DX330/340/350/380)
Discharge Rate (cc/rev)	140
Max. Pressure (kg/cm²)	350
Max. Speed(rpm)	2450

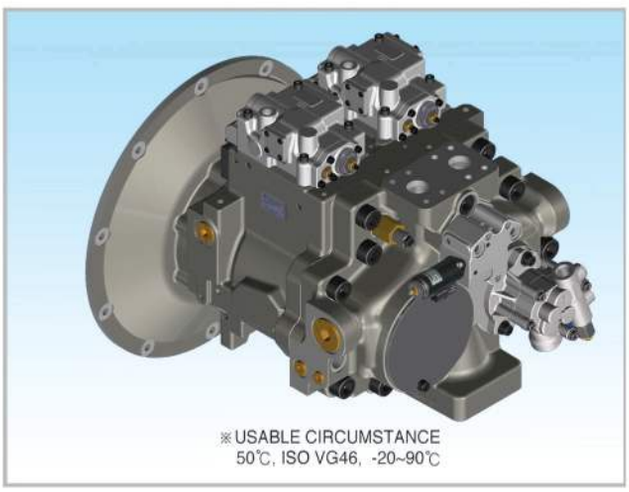

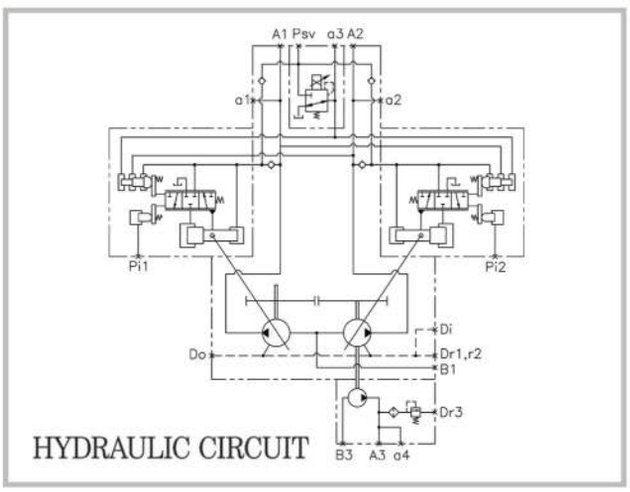

Dimensions of Shaft End(Spline Type)

MODEL	No. of teeth	Pitch Circle Dia(mm)	Module	Pressure Angle	Standard
H5V140DPD (DX330/340/350/380)	24	48	2.0	30°	DIN5480 :1991

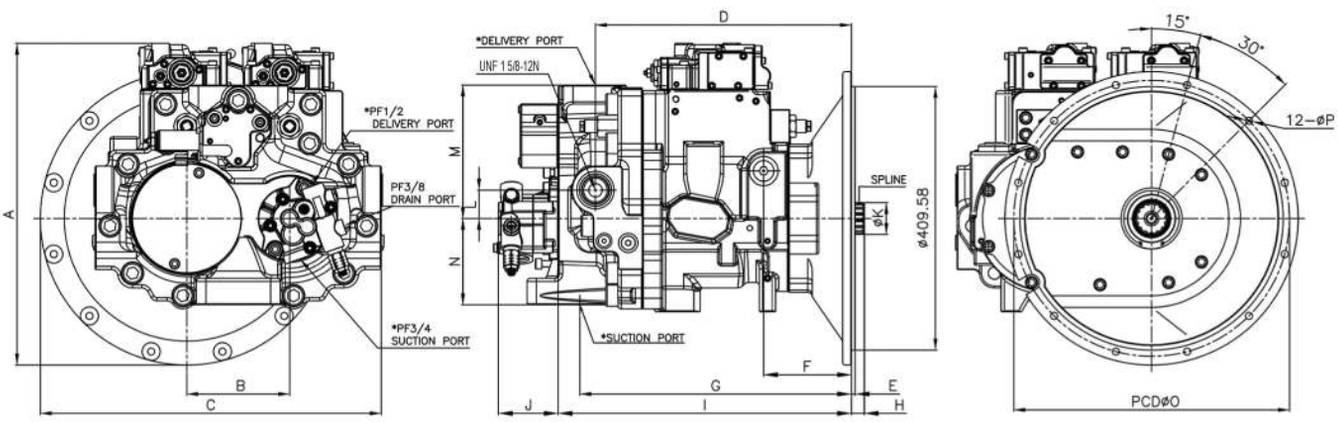

DIMENSIONS

(mm)

MODEL	A	B	C	D	E	F	G	H	I	J	K	L	M	N	O	P	Q	R	P
H5V140DPD (DX330/340/350/380)	500	160	530.5	398	6	136.5	422	20	456	93	49.5	44	207	134	428.6	11	530	44	11

H5V200DPD FOR DOOSAN
PARALLEL TYPE SWASH PLATE PISTON PUMP
H5V200DPD can be applied on DX400/420/450/470 instead of A8V0200 PUMP

SPECIFICATIONS (FOR 9N00 / 9P00 TYPE)

MODEL	H5V200DPD(DX400/420/450/470)
Discharge Rate (cc/rev)	200
Max. Pressure (kg/cm²)	350
Max. Speed(rpm)	2200

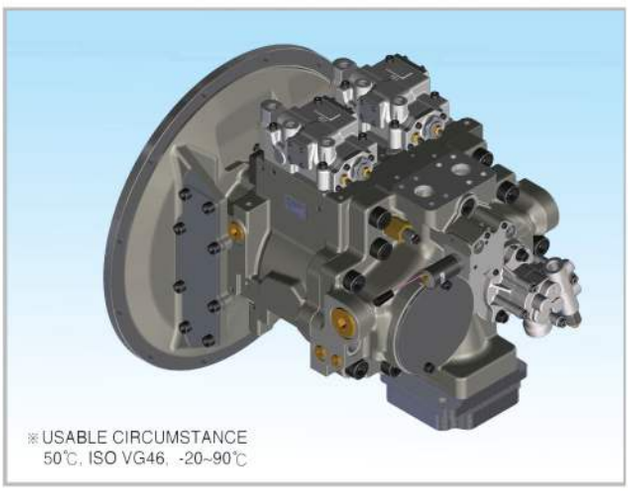

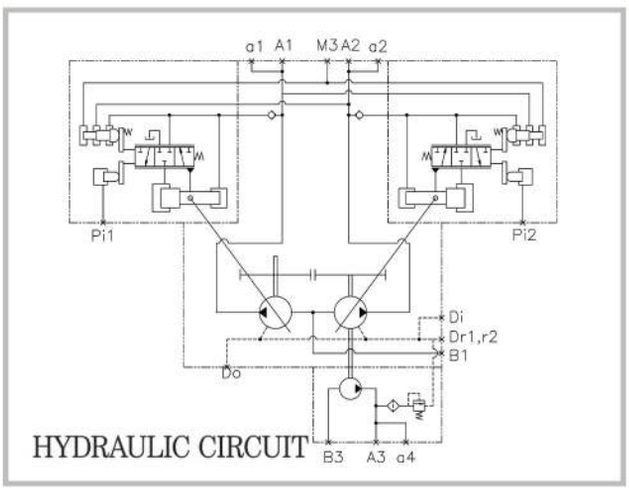

Dimensions of Shaft End(Spline Type)

MODEL	No. of teeth	Pitch Circle Dia(mm)	Module	Pressure Angle	Standard
H5V200DPD (DX400/420/450/470)	24	48	2.0	30°	DIN5480:1991

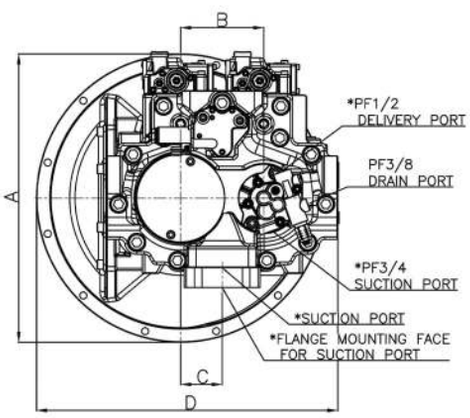

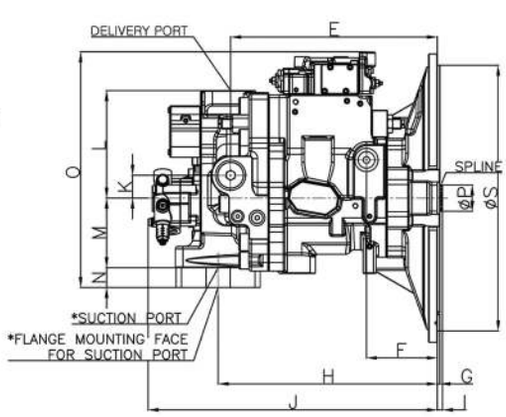

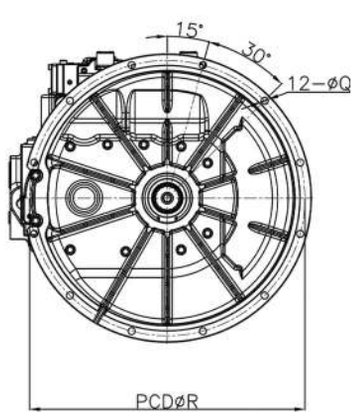

DIMENSIONS

(mm)

MODEL	A	B	C	D	E	F	G	H	I	J	K	L	M	N	O	P	Q	R	S
H5V200DPD (DX400/420/450/470)	555	160	80	580	398	137	5	422	10	557	44	207	134	38	454	49.5	13.5	530	508 511

H3V112DTPE FOR HITACHI

H3V112DTPE can be applied on EX200-2/3, EX210-2/3, EX220-2/3 instead of HPVO91DW/EW PUMPS

SPECIFICATIONS (FOR 3L09 TYPE)

MODEL	H3V112DTPE(EX200-2/3, EX210-2/3, EX220-2/3)
Discharge Rate (cc/rev)	112
Max. Pressure (kg/cm²)	350
Max. Speed(rpm)	1900

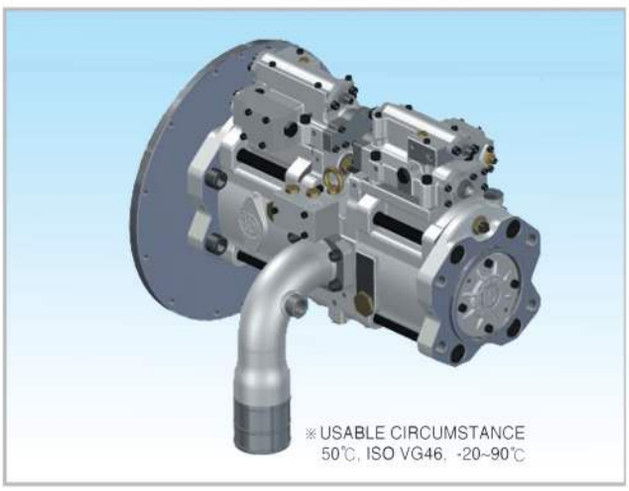

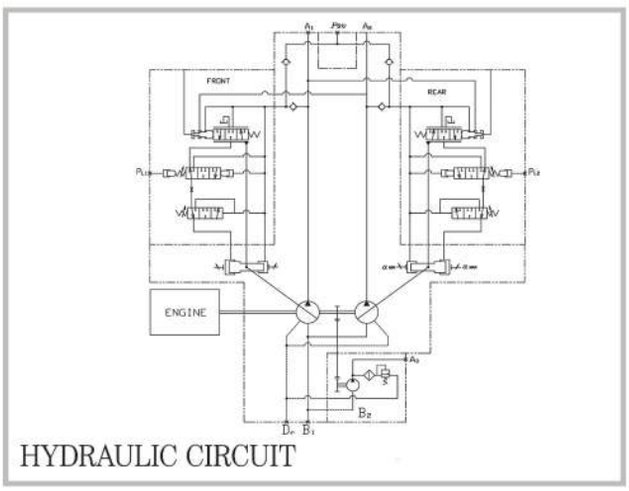

HYDRAULIC CIRCUIT

Dimensions of Shaft End(Spline Type)

MODEL	No. of teeth	Pitch Circle Dia(mm)	Module	Pressure Angle	Standard
H3V1112DTPE (EX200, 210, 220-2/3)	16	40	2.5	20°	JIS B 1603: 1995

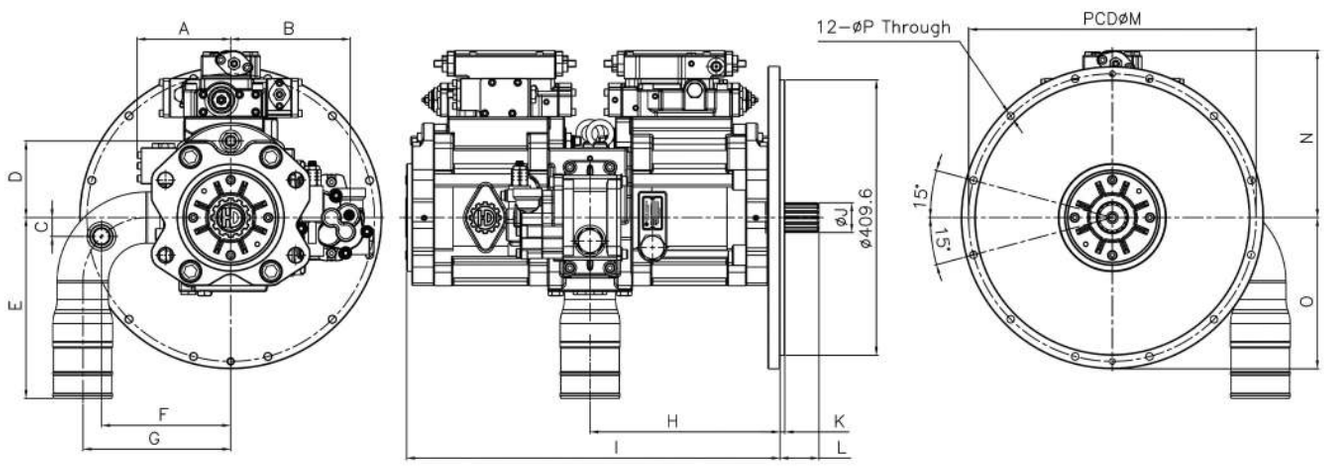

DIMENSIONS

(mm)

MODEL	A	B	C	D	E	F	G	H	I	J	K	L	M	N	O	P
H3V112DTPE (EX200-2/3) (EX210-2/3) (EX220-2/3)	139	178	28	114	269.2	192	220	283	556	44.4	7	58	428	248.6	225	11

H3V112DTE FOR HITACHI

H3V112DTE can be applied on EX200-1, EX210-1, EX220-1 instead of HPV116 PUMPS

SPECIFICATIONS (FOR 9N00 / 9P00 TYPE)

MODEL	H3V112DTE(EX200-1, EX210-1, EX220-1)
Discharge Rate (cc/rev)	112
Max. Pressure (kg/cm²)	350
Max. Speed(rpm)	2150

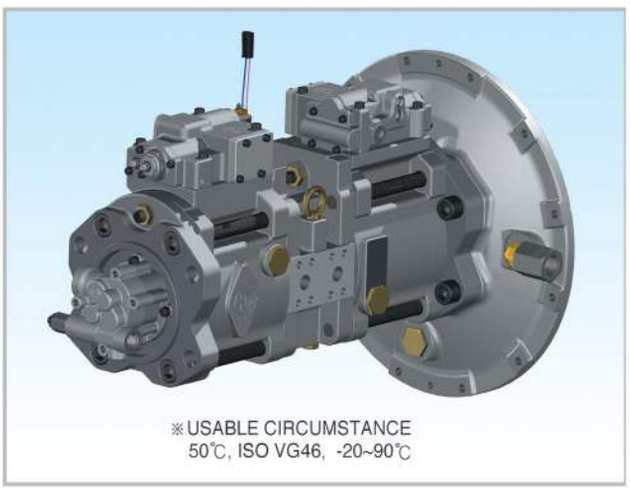

※USABLE CIRCUMSTANCE
50℃, ISO VG46, -20~90℃

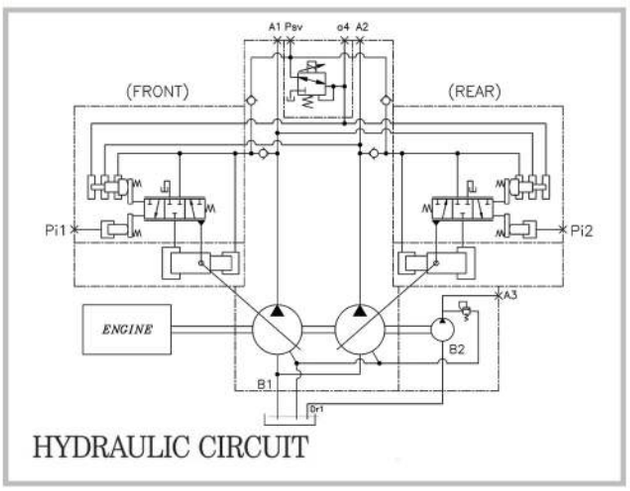

HYDRAULIC CIRCUIT

Dimensions of Shaft End(Spline Type)

MODEL	No. of teeth	Pitch Circle Dia(mm)	Module	Pressure Angle	Standard
H3V112DTE (EX200-1, EX210-1, EX220-1)	15	45	3.0	20°	JIS B 1603 :1995

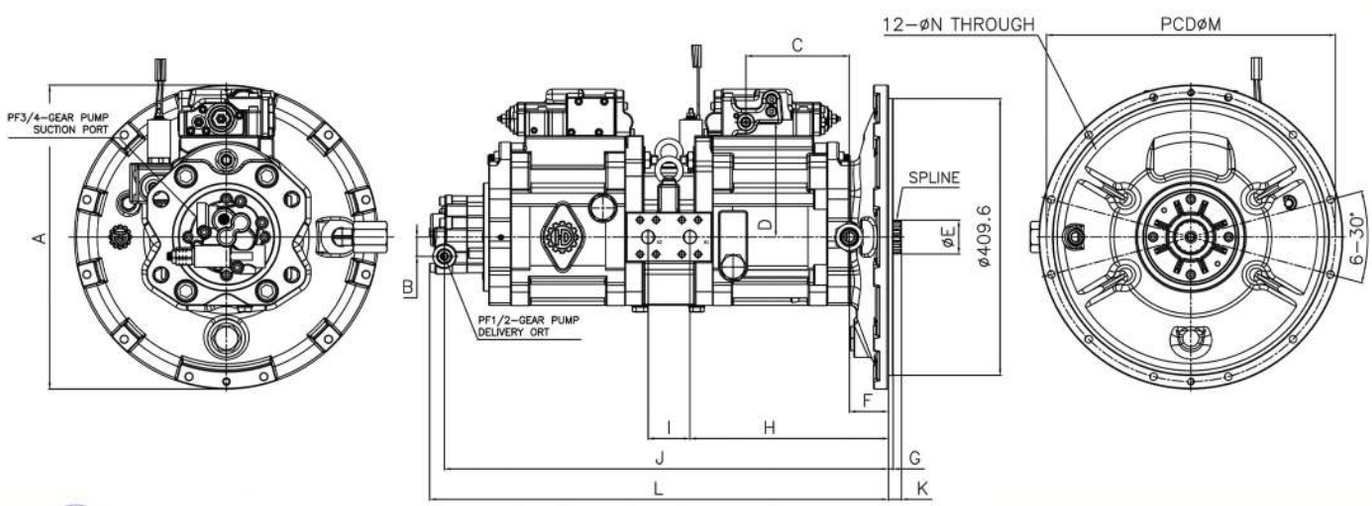

DIMENSIONS

(mm)

MODEL	A	B	C	D	E	F	G	H	I	J	K	L	M	N
H3V112DTE (EX200-1, EX210-1) (EX220-1)	450	29	153	170	50	58	7	294	62	657.8	19.4	679.6	428	11

H3V112DTK FOR KOMATSU

H3V112DTK can be applied on PC180, 190-3/5, PC200, 210, 220-3/5 instead of HPV90 PUMPS

SPECIFICATIONS (FOR 5N00 / 6N00 TYPE)

MODEL	H3V112DTK (PC180,190-3/5, PC200, 210, 220-3/5)
Discharge Rate (cc/rev)	112
Max. Pressure (kg/cm²)	350
Max. Speed (rpm)	1900

Dimensions of Shaft End(Spline Type)

MODEL	No.of teeth	Pitch circle dia(mm)	Module	Pressure angle	Standard
H3V112DTK (PC180, 190-3/5) (PC200, 210, 220-3/5)	16	40	2.5	20°	JIS B 1603 : 1995

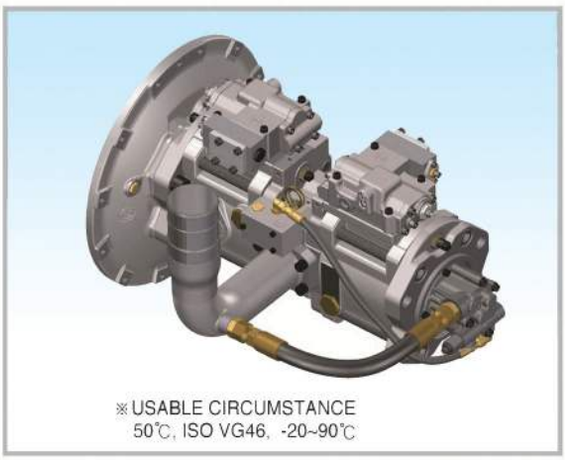

※USABLE CIRCUMSTANCE
50℃, ISO VG46, -20~90℃

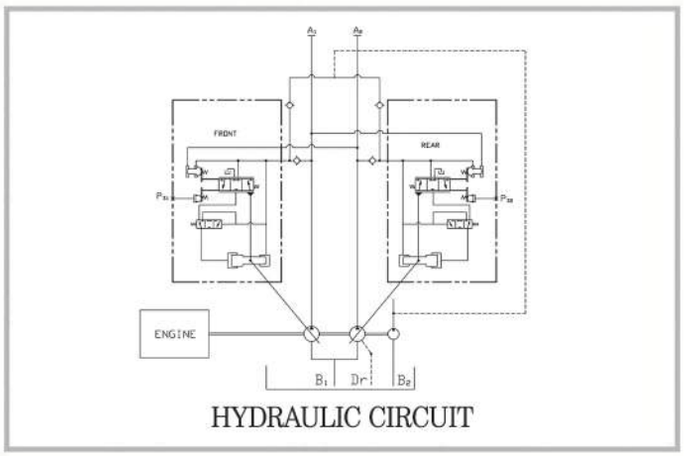

HYDRAULIC CIRCUIT

Flange Mounting face for Suction Port

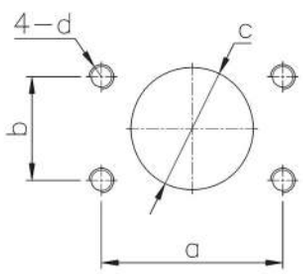

(mm)

a	88.9
b	50.8
c	Ø60
d	M12×1.75P Dp18

Flange Mounting face for Delivery Port

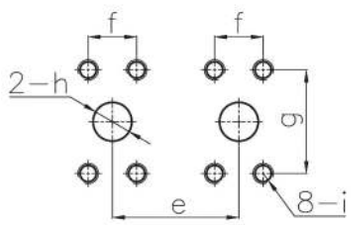

(mm)

e	62
f	23.8
g	50.8
h	Ø19
i	M10×1.5P Dp25

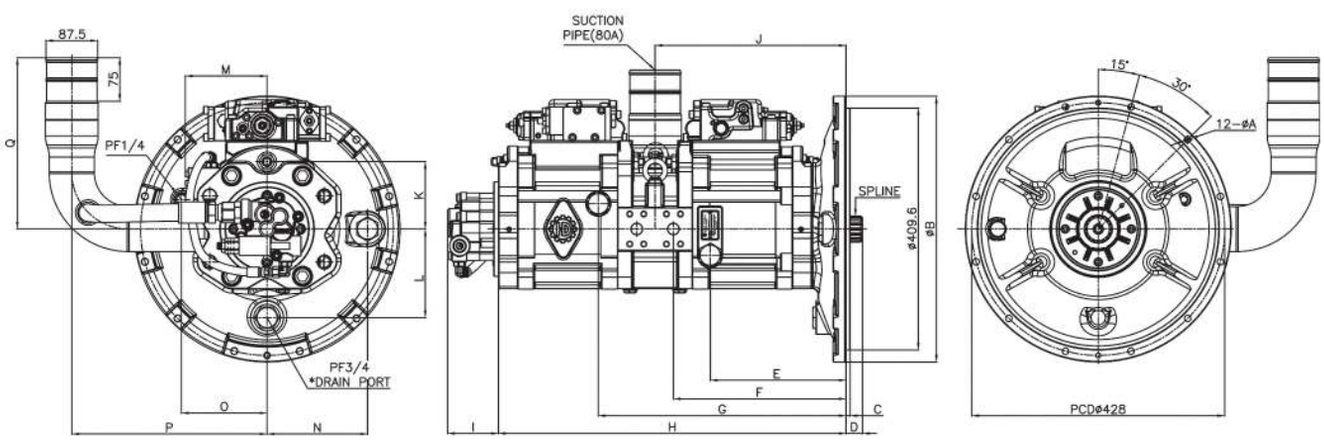

DIMENSIONS

(mm)

MODEL	A	B	C	D	E	F	G	H	I	J	K	L	M	N	O	P	Q
H3V112DTK (PC180,190-3/5) (PC200, 210, 220-3/5)	11	450	7	28	229.5	292	419	588	86	323	114	150	138	170	145	330.4	290

H3V112DTK FOR KOMATSU

H3V112DTK can be applied on PC200-6, PC210-6, PC220-6 instead of HPV95C PUMPS

SPECIFICATIONS(FOR 3L00 TYPE)

MODEL	H3V112DTK (PC200, 210, 220-6)
Discharge Rate (cc/rev)	112
Max. Pressure (kg/cm²)	350
Max. Speed (rpm)	1900

Dimensions of Shaft End(Spline Type)

MODEL	No.of teeth	Pitch circle dia(mm)	Module	Pressure angle	Standard
H3V112DTK (PC200, 210, 220-6)	16	40	2.5	20°	JIS B 1603 :1995

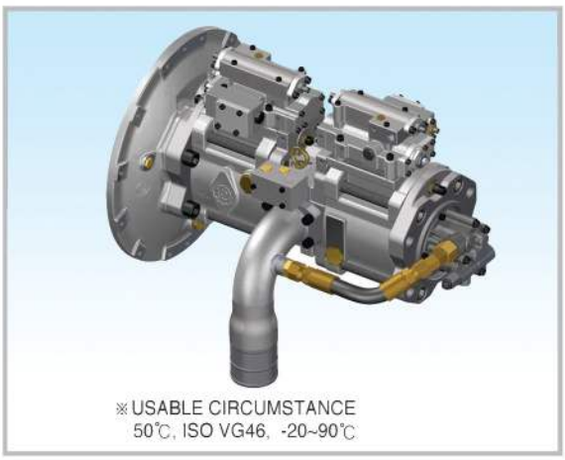

※USABLE CIRCUMSTANCE
50℃, ISO VG46, -20~90℃

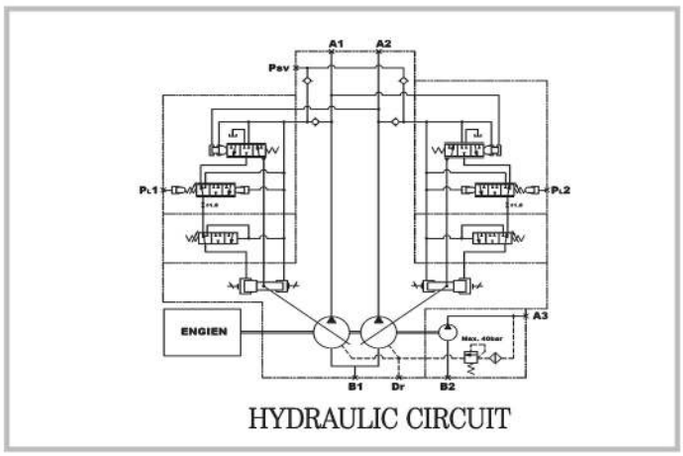

HYDRAULIC CIRCUIT

Flange Mounting face for Suction Port

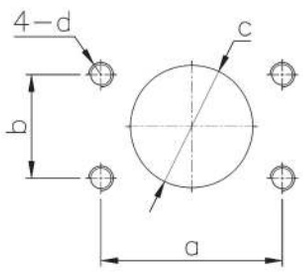

(mm)

a	88.9
b	50.8
c	Ø60
d	M12X1.75P Dp18

Flange Mounting face for Delivery Port

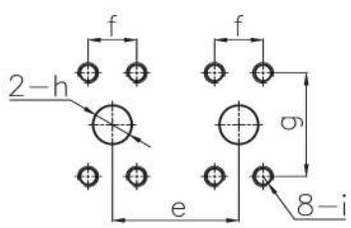

(mm)

e	62
f	23.8
g	50.8
h	Ø19
i	M10X1.5P Dp25

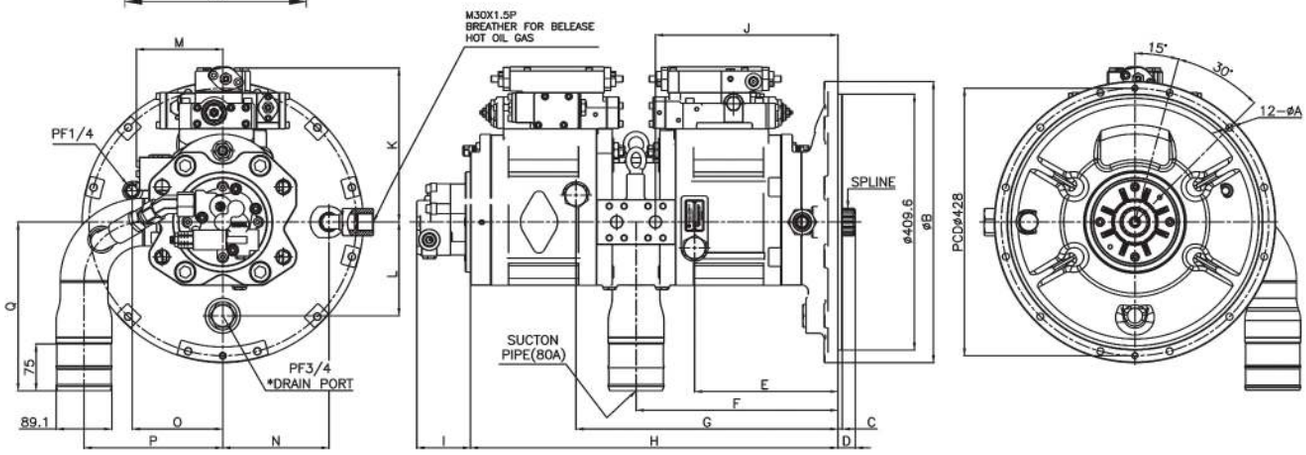

DIMENSIONS

(mm)

MODEL	A	B	C	D	E	F	G	H	I	J	K	L	M	N	O	P	Q
H3V112DTK (PC200, 210, 220-6)	11	450	7	28	229.5	323	419	588	86	292	246.6	150	138	170	145	222	270

H3V112DTK FOR KOMATSU

H3V112DTK can be applied on PC200-7/8, PC210-7/8, PC220-7/8 instead of HPV95A PUMPS

SPECIFICATIONS(FOR 3L00 TYPE)

MODEL	H3V112DTK (PC200, 210, 220-7/8)
Discharge Rate (cc/rev)	112
Max. Pressure (kg/cm²)	350
Max. Speed (rpm)	1900

Dimensions of Shaft End(Spline Type)

MODEL	No.of teeth	Pitch circle dia(mm)	Module	Pressure angle	Standard
H3V112DTK (PC200, 210, 220-7/8)	16	40	2.5	20°	JIS B 1603 :1995

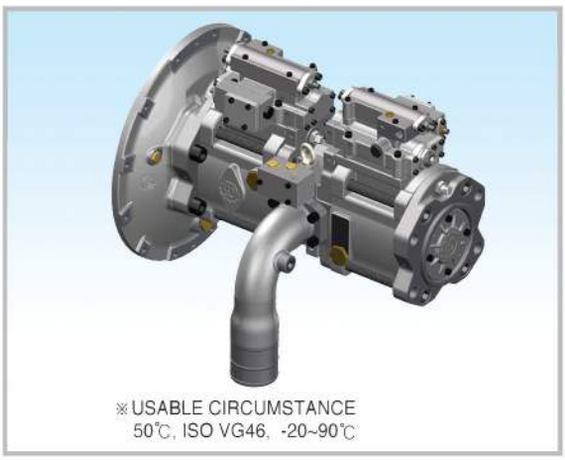

※USABLE CIRCUMSTANCE
50℃, ISO VG46, -20~90℃

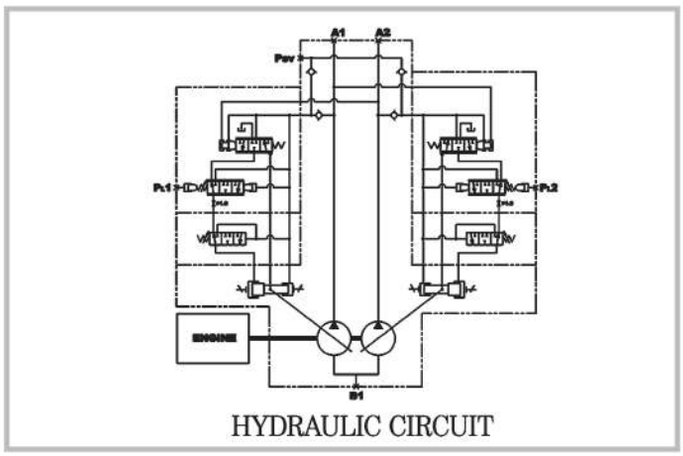

HYDRAULIC CIRCUIT

Flange Mounting face for Suction Port

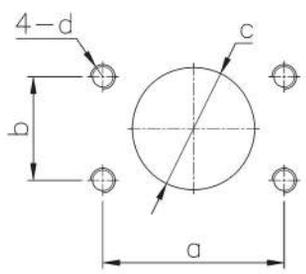

(mm)

a	88.9
b	50.8
c	Ø60
d	M12X1.75P Dp18

Flange Mounting face for Delivery Port

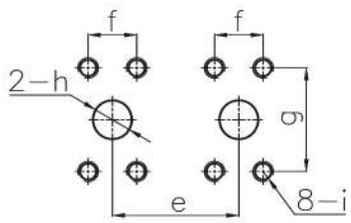

(mm)

e	62
f	23.8
g	50.8
h	Ø19
i	M10X1.5P Dp25

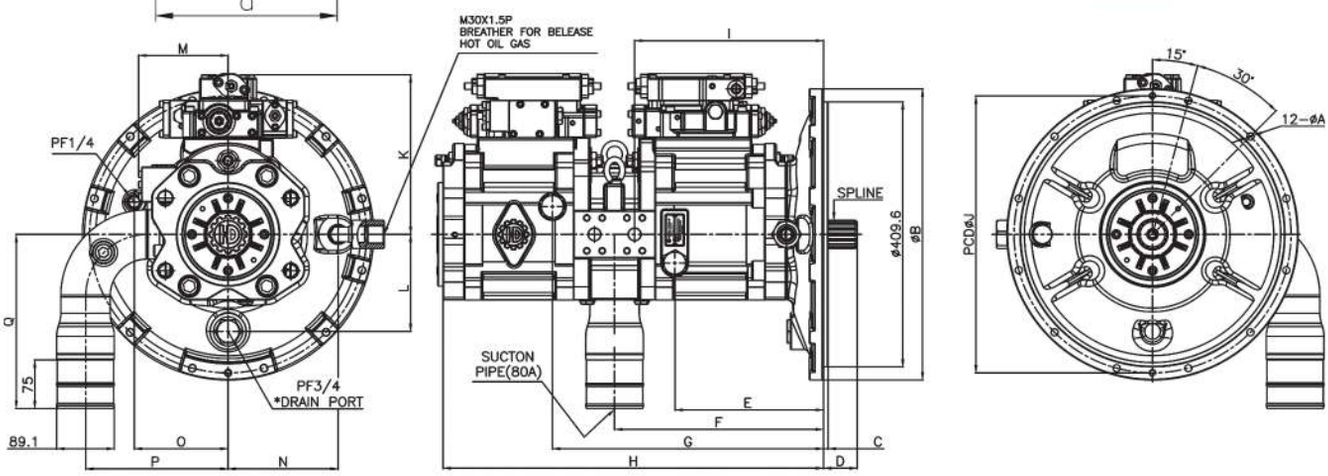

DIMENSIONS

(mm)

MODEL	A	B	C	D	E	F	G	H	I	J	K	L	M	N	O	P	Q
H3V112DTK (PC200, 210, 220-7/8)	11	450	7	52	229.5	323	419	588	292	428	247	150	138	170	145	220	269

H3V112DTK-E FOR KOMATSU

H3V112DTK-E can be applied on PC200-6, PC210-6, PC220-6 instead of HPV95C PUMP

SPECIFICATIONS(FOR 3L00 TYPE)

MODEL	H3V112DTK-E (PC200, 210, 220-6)
Discharge Rate (cc/rev)	112
Max. Pressure (kg/cm²)	350
Max. Speed (rpm)	1900

Dimensions of Shaft End(Spline Type)

MODEL	No.of teeth	Pitch circle dia(mm)	Module	Pressure angle	Standard
H3V112DTK-E (PC200, 210, 220-6)	16	40	2.5	20°	JIS B 1603 :1995

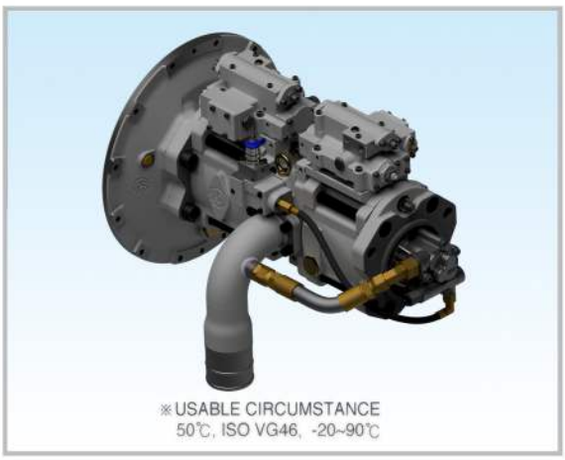

※USABLE CIRCUMSTANCE
50℃, ISO VG46, -20~90℃

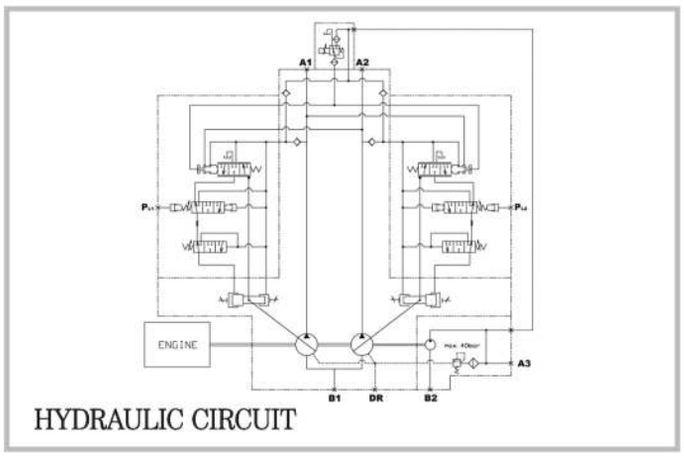

HYDRAULIC CIRCUIT

Flange Mounting face for Suction Port

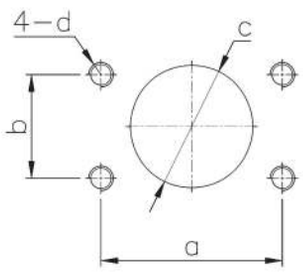

(mm)

a	88.9
b	50.8
c	Ø60
d	M12X1.75P Dp18

Flange Mounting face for Delivery Port

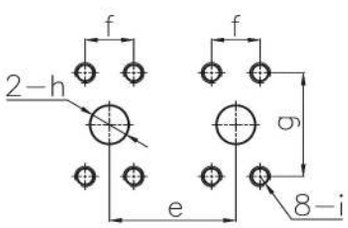

(mm)

e	62
f	23.8
g	50.8
h	Ø19
i	M10X1.5P Dp25

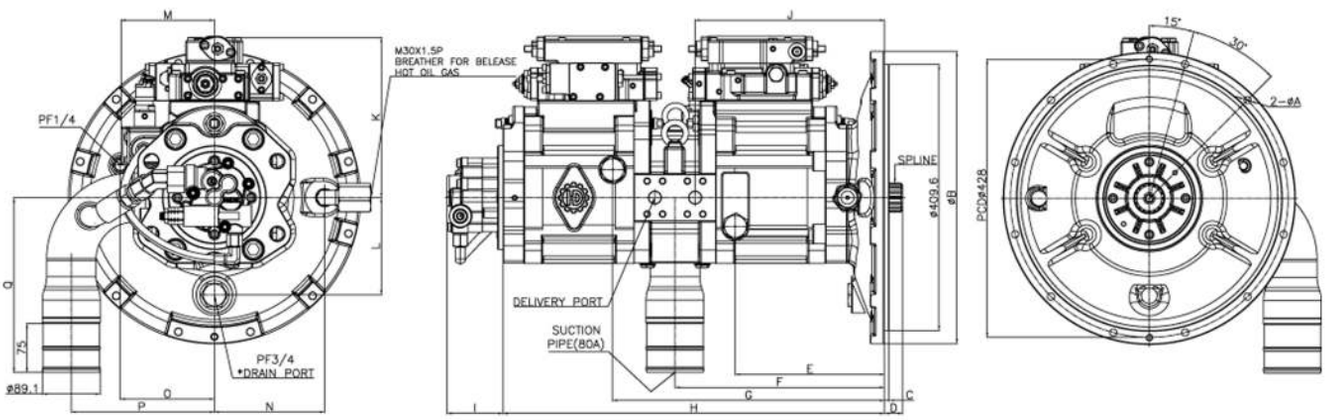

DIMENSIONS

(mm)

MODEL	A	B	C	D	E	F	G	H	I	J	K	L	M	N	O	P	Q
H3V112DTK-E (PC200, 210, 220-6)	11	450	7	28	229.5	323	419	588	86	292	246.6	150	144	170	145	222	270

H3SP30/36
SWASH PLATE TYPE PISTON PUMPS

SPECIFICATIONS

MODEL	H3SP30	H3SP36
Discharge Rate(cc/rev)	30 x 2	36 x 2
Max. Pressure (kg/cm²)	260	
Max. Speed (rpm)	2,300	

Dimensions of Shaft End(Spline Type)

MODEL	No. of teeth	Pitch circle dia(mm)	Module	Pressure angle	Standard
H3SP30/36	15	22.5	1.5	20°	JIS B 1603

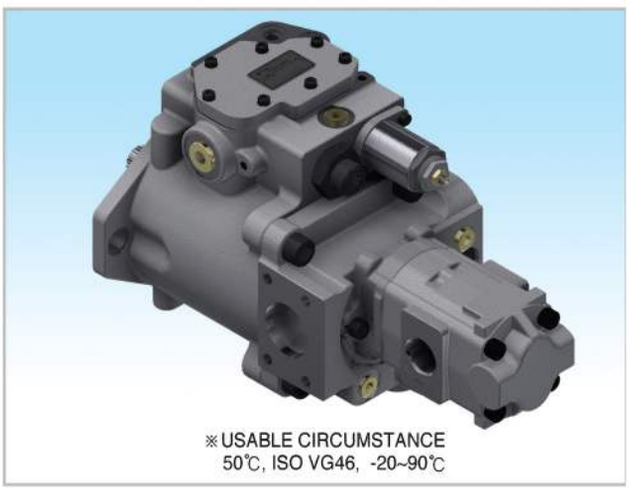

※USABLE CIRCUMSTANCE
50℃, ISO VG46, -20~90℃

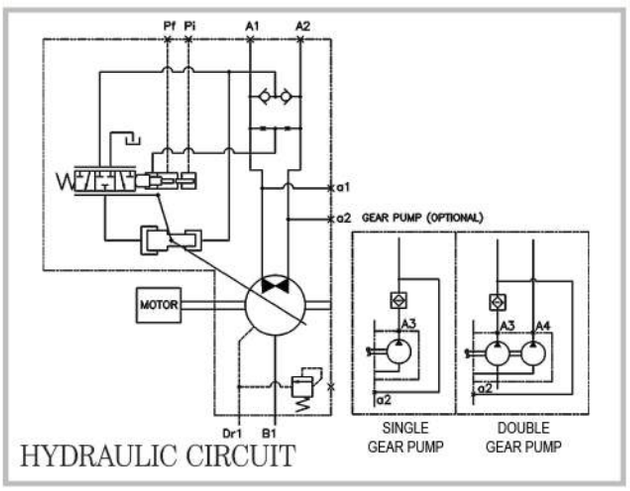

HYDRAULIC CIRCUIT

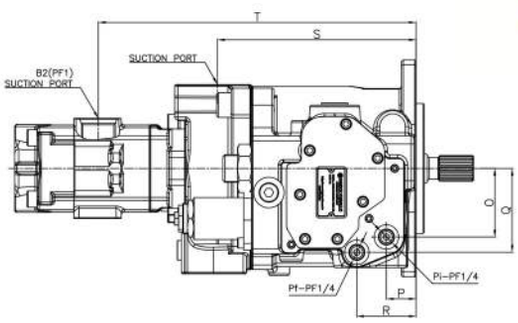

Flange Mounting face for Suction Port

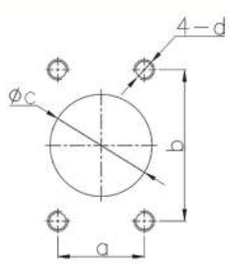

(mm)

a	42.9
b	77.8
c	48.3
d	M12x1.75P Dp18

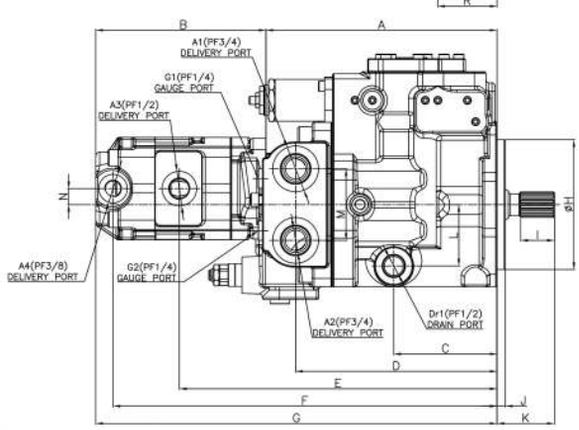

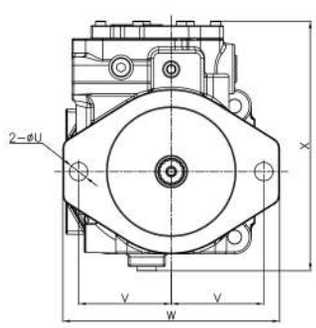

DIMENSIONS

(mm)

MODEL	A	B	C	D	E	F	G	H	I	J	K	L	M	N	O	P	Q	R	S	T	U	V	W	X
H3SP30/36 SINGLE GEAR PUMP	226	92.5	101	197	301.5	–	318.5	127	33	8	56	60	70	16	67	29	82	58	194	311	18	90.5	212	244
H3SP30/36 DOUBLE GEAR PUMP		166.5			311	376	392.5																	

H3SP36 FOR TAKEUCHI
SWASH PLATE TYPE PISTON PUMP

SPECIFICATIONS

MODEL	H3SP36 (FOR TAKEUCHI)
Discharge Rate (cc/rev)	36 X 2
Max. Pressure (kg/cm²)	260
Max. Speed (rpm)	2,300

Dimensions of Shaft End(Spline Type)

MODEL	No.of teeth	Pitch circle dia(mm)	Module	Pressure angle	Standard
H3SP36 (FOR TAKEUCHI)	15	22.5	1.5	20°	JIS



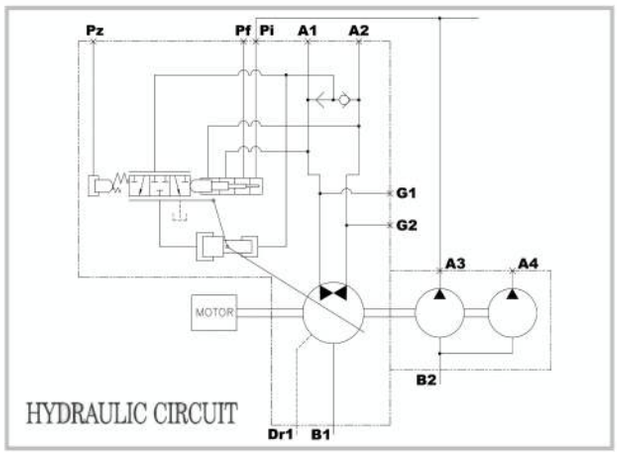

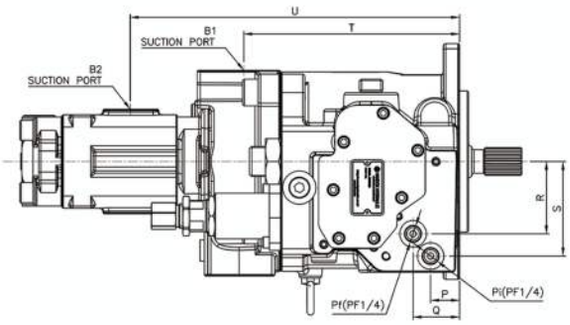

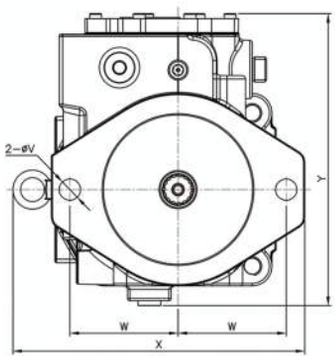

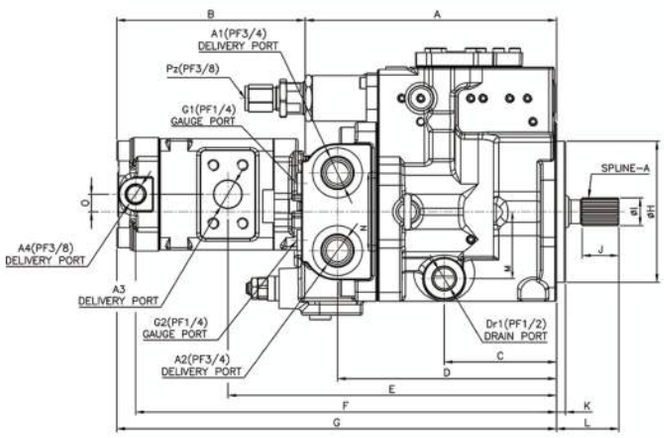

Flange Mounting face for Suction Port

(mm)

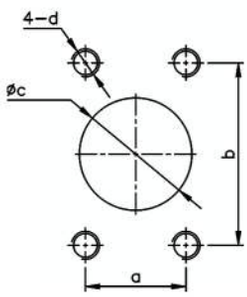

	B1 (SUCTION PORT)	B2 (SUCTION PORT)	A3 (DELIVERY PORT)
a	42.9	30.2	26.2
b	77.9	58.7	52.4
c	48	32	24
d	M12x1.75P Dp18	M10x1.5P Dp15	M10x1.5P Dp15

DIMENSIONS

(mm)

MODEL	A	B	C	D	E	F	G	H	I	J	K	L	M	N	O	P	Q	R	S	T	U	V	W	X	Y
H3SP36 (FOR TAKEUCHI)	226	169.4	101	197	295.5	378.5	395.4	127	25	33	8	56	60	70	16	26	42	65	85	194	296	18	91	244	244

H11VLO190/260
SWASH PLATE TYPE PISTON PUMPS

SPECIFICATIONS(FOR H11VLO190 & O260LRDU)

MODEL	H11VLO190/260
Discharge Rate(cc/rev)	190 / 260
Max. Pressure (kg/cm²)	350
Max. Speed (rpm)	2500 / 2300

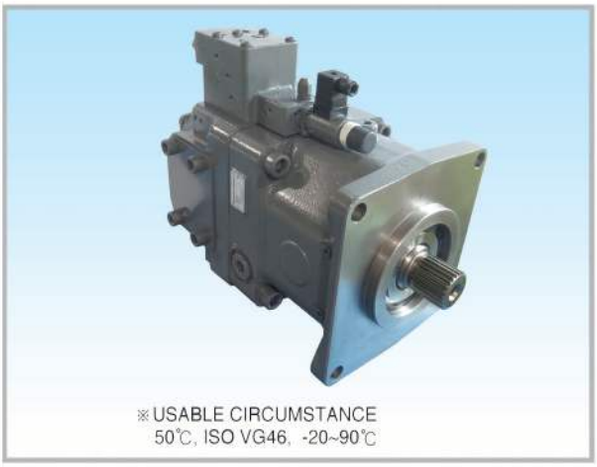

※USABLE CIRCUMSTANCE
50℃, ISO VG46, -20~90℃

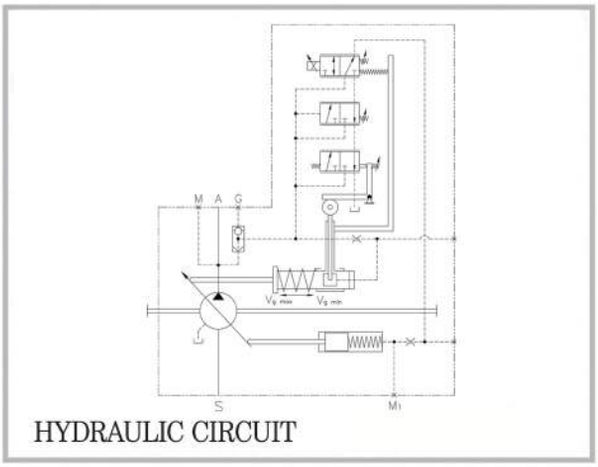

HYDRAULIC CIRCUIT

Flange Mounting face for Suction Port

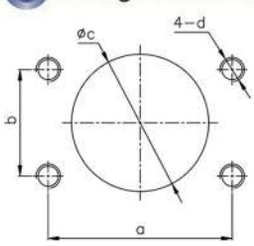

(mm)

	H11VLO190	H11VLO260
a	120.7	130.2
b	69.9	77.8
c	90	100
d	M16x2.0P	

Flange Mounting face for Delivery Port

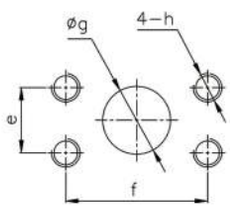

(mm)

	H11VLO190	H11VLO260
e	36.5	
f	79.4	
g	38	
h	M16x2.0P	

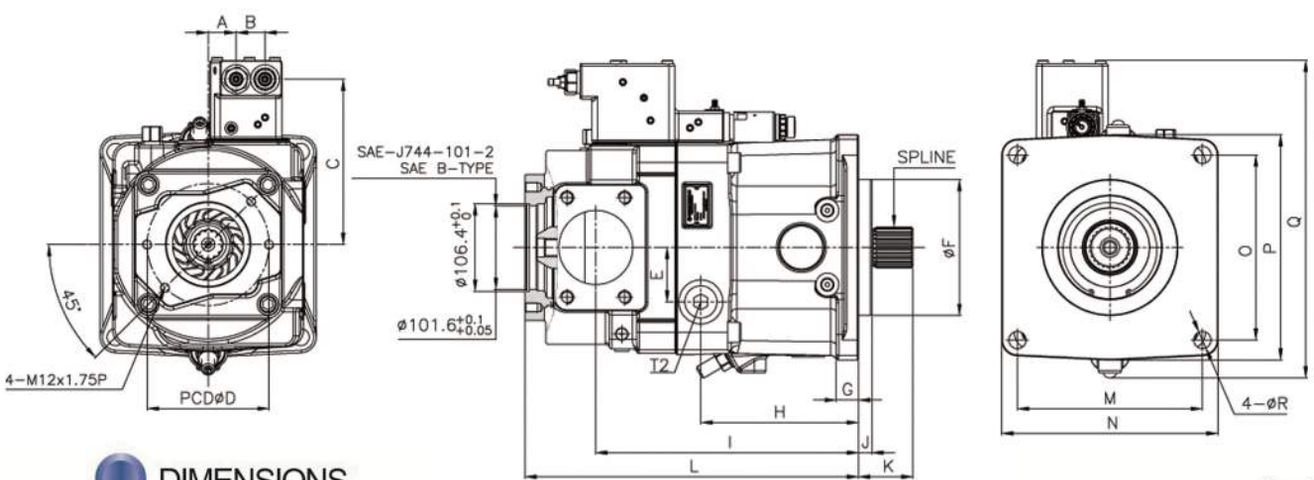

DIMENSIONS

(mm)

MODEL	A	B	C	D	E	F	G	H	I	J	K	L	M	N	O	P	Q	R	SPLINE
H11VLO190	34	35	200.5	146	66	165.1	27	196.5	321	15.9	65	410	224.5	262.5	224.5	273	385.2	21	24T
H11VLO260	40	35	212		72		30	214	346			437.5							28T

HSF20S/30S/35S SWASH PLATE TYPE PISTON PUMPS FOR DRILL & BORING MACHINE

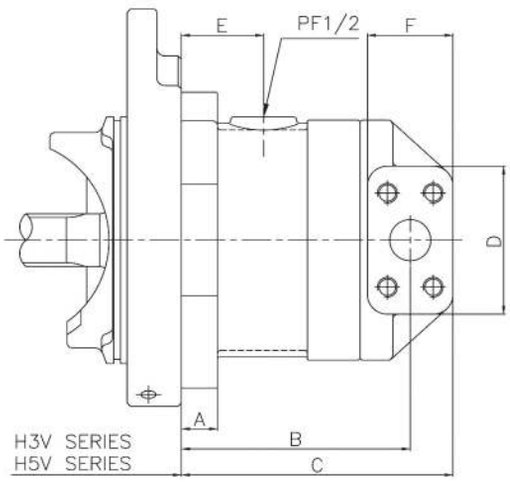

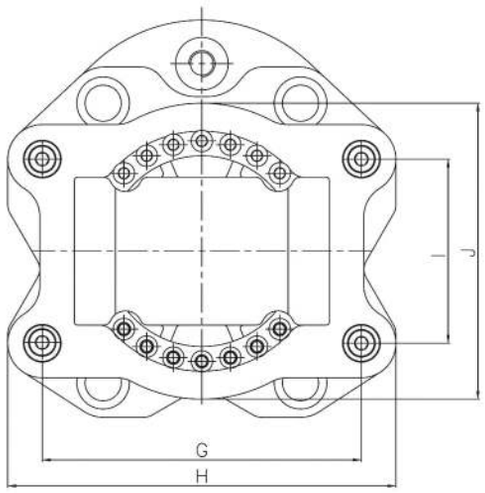

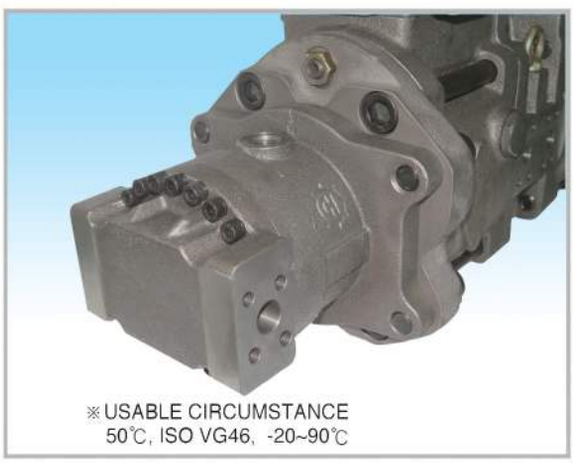

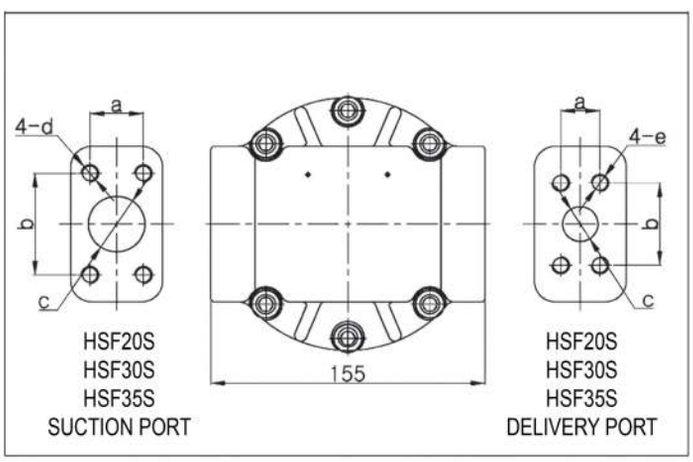

SPECIFICATIONS

MODEL	HSF20S	HSF30S	HSF35S
Discharge Rate(cc/rev)	20	30	35
Max. Pressure (kg/cm²)	250		
Max. Speed (rpm)	2360		

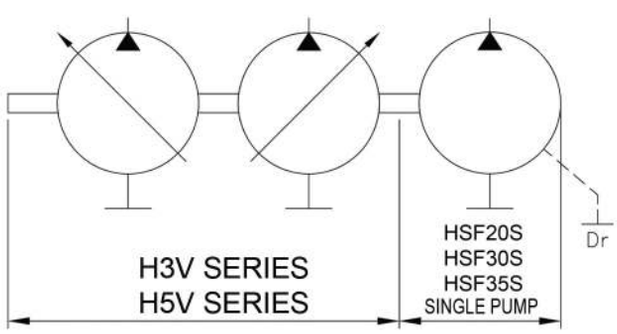

Flange Mounting face for Suction Port

(mm)

MODEL	a	b	c	d
HSF20S	30.2	59	Ø32	M10X1.5P Dp20
HSF30S				
HSF35S				

Flange Mounting face for Delivery Port

(mm)

MODEL	a	b	c	d	e
HSF20S	23.9	51	Ø19	-	M10X1.5P Dp20
HSF30S					
HSF35S					

DIMENSIONS

(mm)

MODEL	A	B	C	D	E	F	G	H	I	J
HSF20S	22	138.6	164.6	90	52	50	194	236	112	154
HSF30S										
HSF35S										

HSF20D/30D/35D SWASH PLATE TYPE PISTON PUMPS FOR DRILL & BORING MACHINE

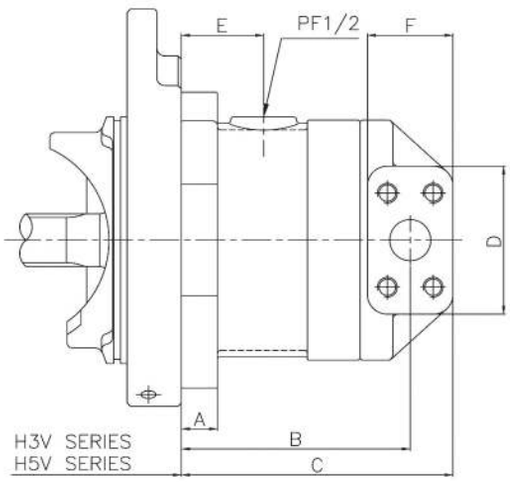

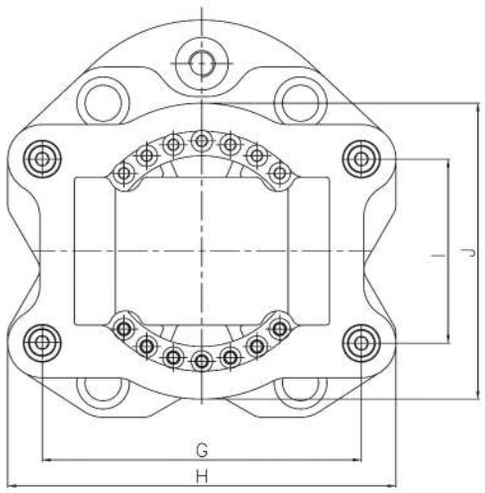

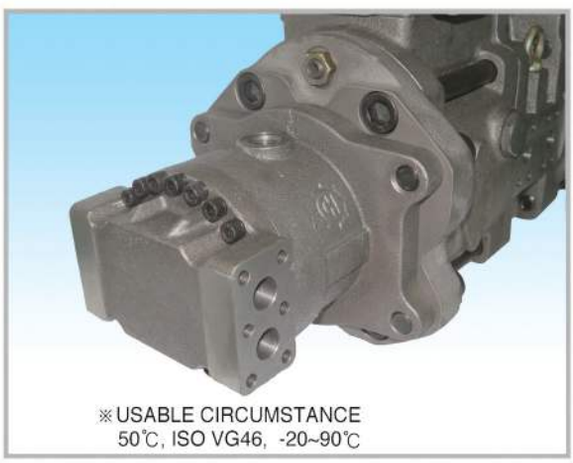

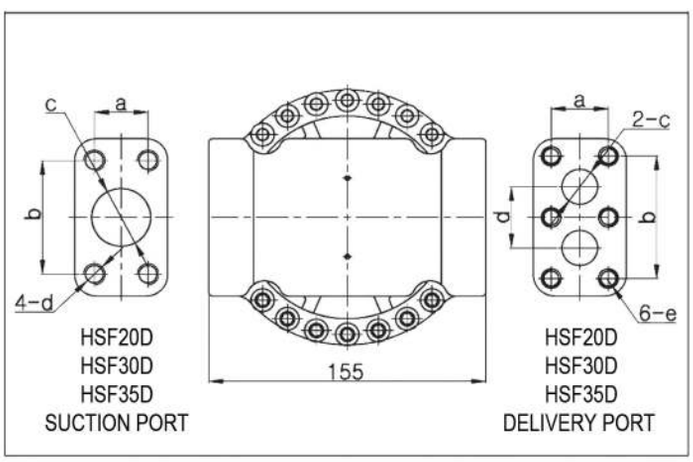

SPECIFICATIONS

MODEL	HSF20D	HSF30D	HSF35D
Discharge Rate(cc/rev)	20x2	30x2	35x2
Max. Pressure (kg/cm²)	250		
Max. Speed (rpm)	2650	2360	

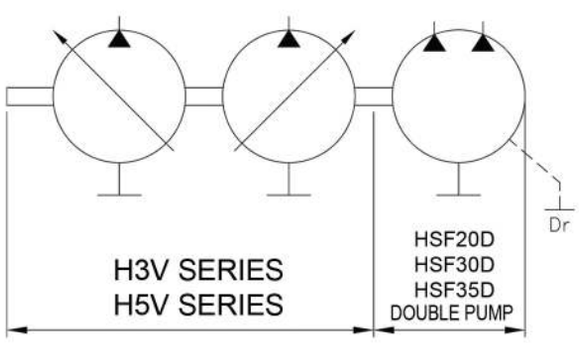

Flange Mounting face for Suction Port

(mm)

MODEL	a	b	c	d
HSF20D HSF30D HSF35D	30	65	Ø33	M12X1.75P Dp20

Flange Mounting face for Delivery Port

(mm)

MODEL	a	b	c	d	e
HSF20D HSF30D HSF35D	32	70	Ø20	35	M10X1.5P Dp20

DIMENSIONS

(mm)

MODEL	A	B	C	D	E	F	G	H	I	J
HSF20D HSF30D HSF35D	22	138.6	164.6	90	52	50	194	236	112	154

HBS80/120/140 FOR CATERPILLAR
PARALLEL TYPE SWASH PLATE PISTON PUMPS

SPECIFICATIONS

MODEL	HBS80	HBS120	HBS140
Discharge Rate(cc/rev)	80	120	140
Max. Pressure (kg/cm²)	350		
Max. Speed (rpm)	2150	2500	



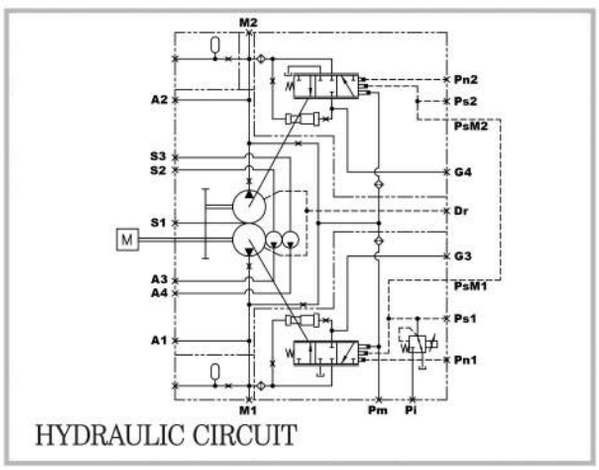

HYDRAULIC CIRCUIT

Dimensions of Shaft End(Spline Type)

MODEL	No. of teeth	Pitch circle dia(mm)	Module	Pressure angle
HBS80	14	29.63	12/24	30°
HBS120/140	17	43.18	2.54	30°

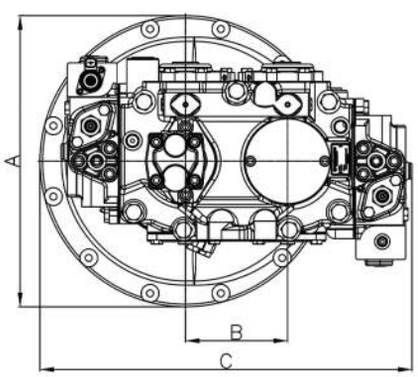

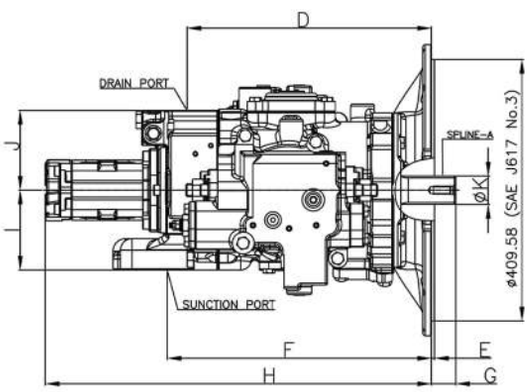

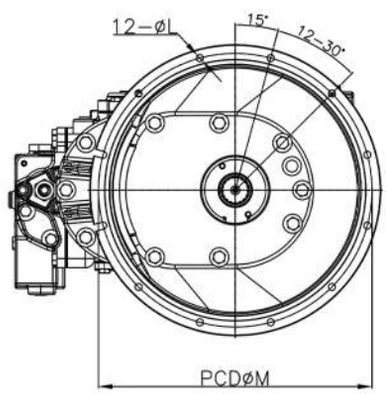

DIMENSIONS

(mm)

MODEL	A	B	C	D	E	F	G	H	I	J	K	L	M
HBS80	450	126	548.5	316.5	7	326.5	32	454.4	143	123	31	11	428.6
HBS120/140	456	160	583	383	5	414	38	605	125	125	44.8	11	428.6

HBS80/120/140 FOR CATERPILLAR
PARALLEL TYPE SWASH PLATE PISTON PUMPS

SPECIFICATIONS

MODEL	HBS80	HBS120	HBS140
Discharge Rate(cc/rev)	80	120	140
Max. Pressure (kg/cm²)	350		
Max. Speed (rpm)	2150	2500	



※ USABLE CIRCUMSTANCE
50℃, ISO VG46, -20~90℃

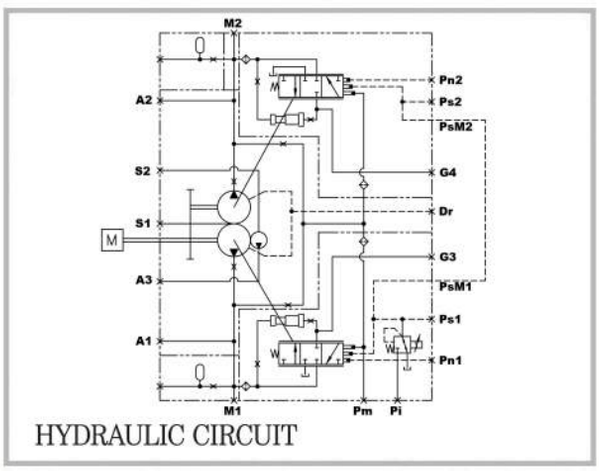

HYDRAULIC CIRCUIT

Dimensions of Shaft End(Spline Type)

MODEL	No. of teeth	Pitch circle dia(mm)	Module	Pressure angle
HBS80	14	29.63	12/24	30°
HBS120/140	17	43.18	2.54	30°

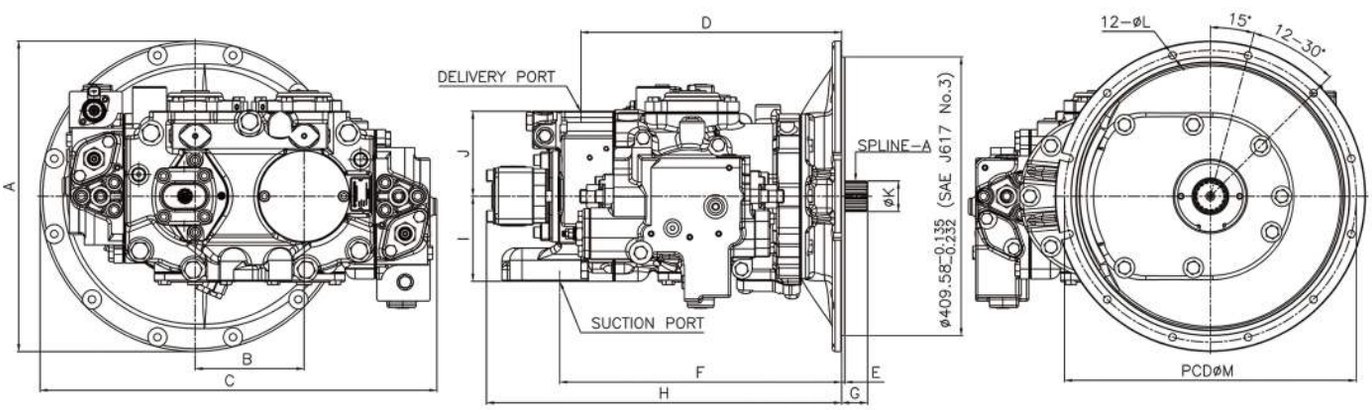

DIMENSIONS

(mm)

MODEL	A	B	C	D	E	F	G	H	I	J	K	L	M
HBS80	450	126	548.5	316.5	7	326.5	32	454.4	143	123	31	11	428.6
HBS120/140	456	160	583	383	5	414	38	521.5	125	125	44.8	11	428.6

PTO BOX FOR H3V/H5V DTP SERIES (WITH SENSOR TYPE FOR HITACHI)

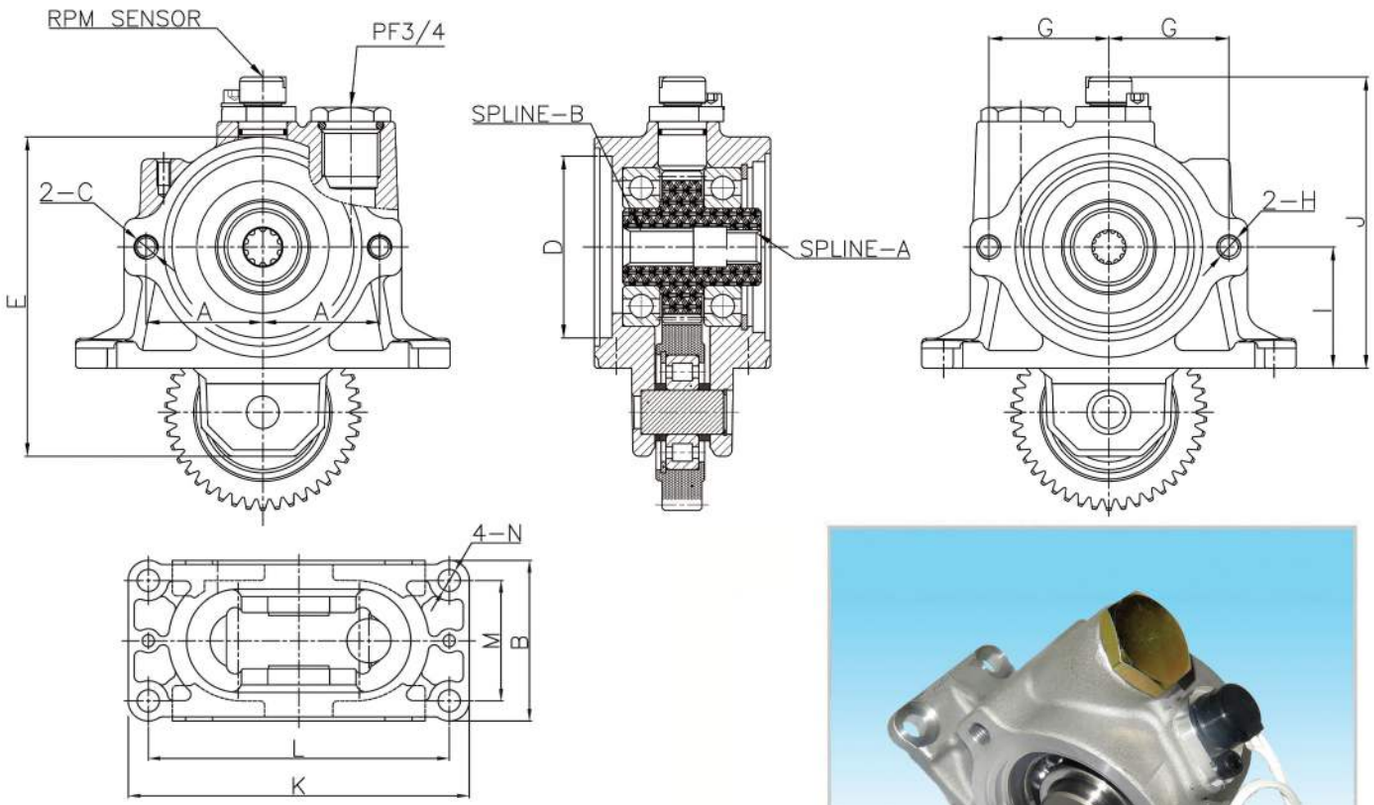

• H3V63DTP/112DTP/H5V80DTP ADAPTER

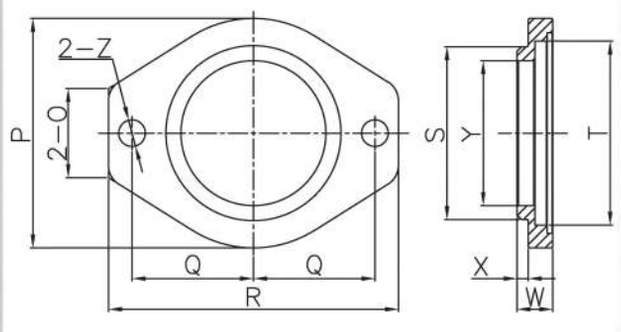

Dimensions of Shaft End(Spline Type)

MODEL	No. of teeth	Pitch circle dia(mm)	Module	Pressure angle	Standard
SPLINE-A	13	13	M1.0	20°	JIS
SPLINE-B	10	15.875	16/32	30°	SAE

Dimensions for H3V63DTP/112DTP/H5V80DTP Adapter

(mm)

MODEL	O	P	Q	R	S	T	W	X	Y	Z
H3V63DTP H3V112DTP H5V80DTP	40	Ø103	54.5	130	Ø77.5	Ø82.5	16	5	65	Ø12

Dimensions for H3V63DTP/112DTP/H5V80DTP/140DTP

(mm)

MODEL	A	B	C	D	E	F	G	H	I	J	K	L	M	N	SPLINE-A	SPLINE-B
H3V63DTP H3V112DTP H5V80DTP H5V140DTP	53	80	M10X1.5P	Ø82.5	143	80	54.5	M10X1.5P	55	132	170	150	60	Ø11	Z13	Z10

PTO BOX FOR H3V/H5V DTP SERIES (WITHOUT SENSOR TYPE FOR NORMAL)

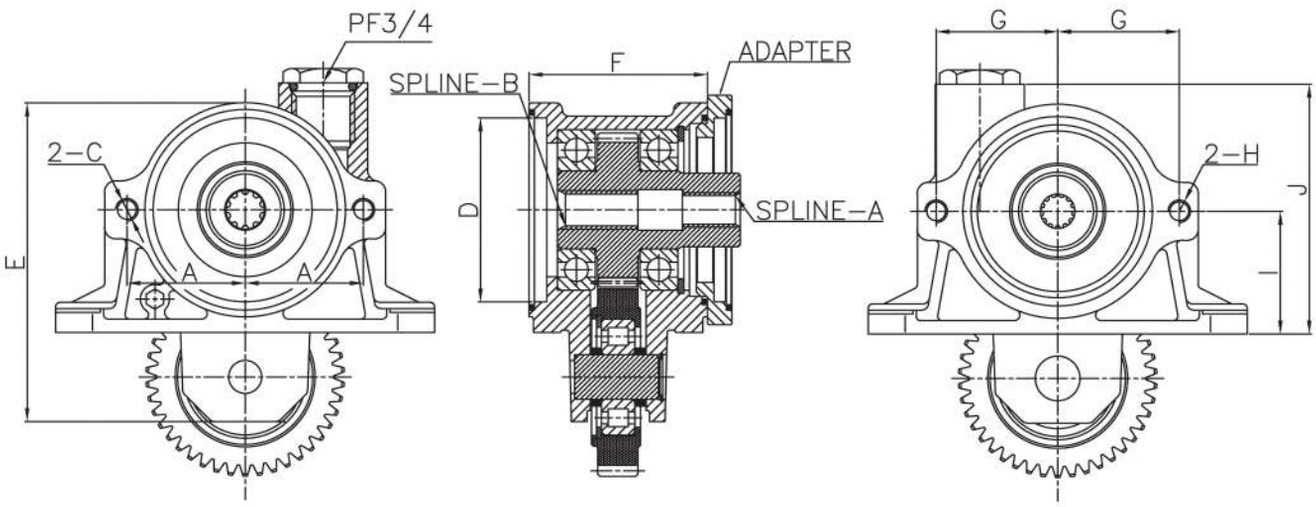

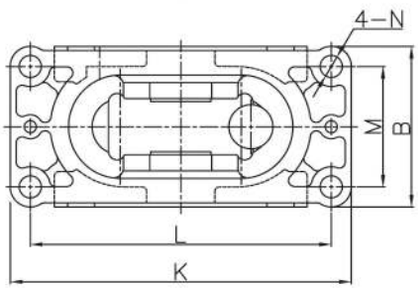



• H3V63DTP/112DTP/H5V80DTP ADAPTER

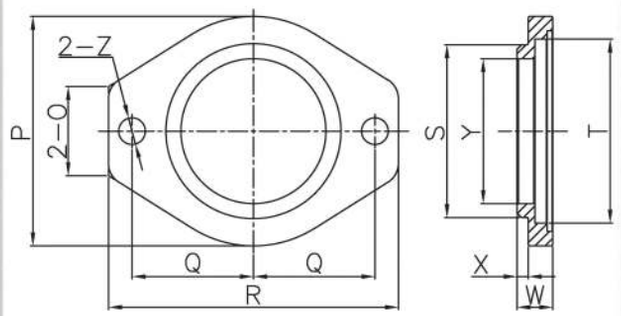

Dimensions of Shaft End(Spline Type)

MODEL	No. of teeth	Pitch circle dia(mm)	Module	Pressure angle	Standard
SPLINE-A	13	13	M1.0	20°	JIS
SPLINE-B	10	15.875	16/32	30°	SAE

Dimensions for H3V63DTP/112DTP/H5V80DTP Adapter

(mm)

MODEL	O	P	Q	R	S	T	W	X	Y	Z
H3V63DTP H3V112DTP H5V80DTP	40	Ø103	54.5	130	Ø77.5	Ø82.5	16	5	65	Ø12

Dimensions for H3V63DTP/112DTP/H5V80DTP/140DTP/160DTP/180DTP

(mm)

MODEL	A	B	C	D	E	F	G	H	I	J	K	L	M	N	SPLINE-A	SPLINE-B
H3V63DTP H3V112DTP H5V80DTP H5V140DTP	53	80	M10X1.5P	Ø82.5	143	80	54.5	M10X1.5P	55	112	170	150	60	Ø11	Z13	Z10
H5V160DTP H5V180DTP	54.5	94	M10X1.5P	Ø77.5	205	104	73	M12X1.75P	80	165	216	192	70	Ø14	Z13	Z13

Various Gear Pump Applies in P.T.O BOX



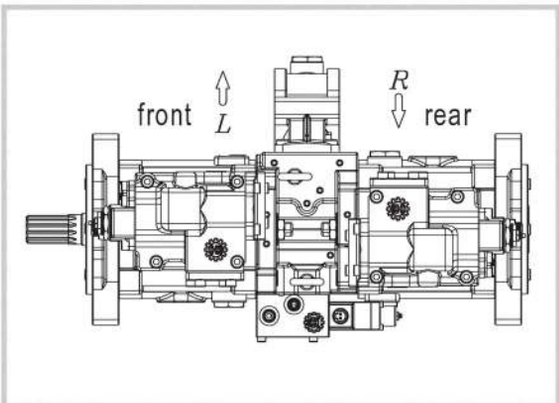

Applies in Front Type

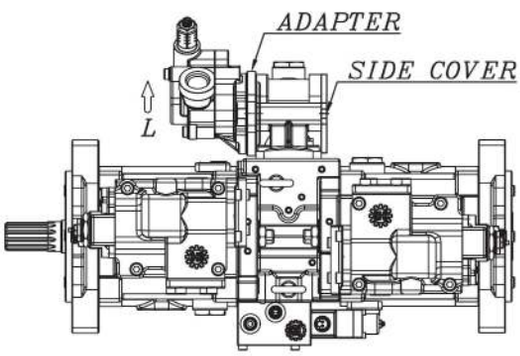

H3V63&H5V80

Applies in Rear Type

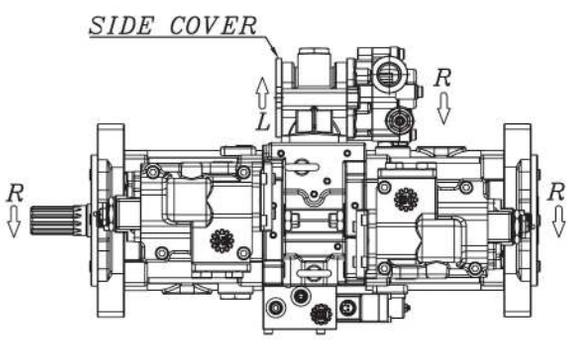

H3V63/H3V112&H5V80/H5V140

Applies in H3V112DTP & H5V140DTP for Wheel Type Excavator

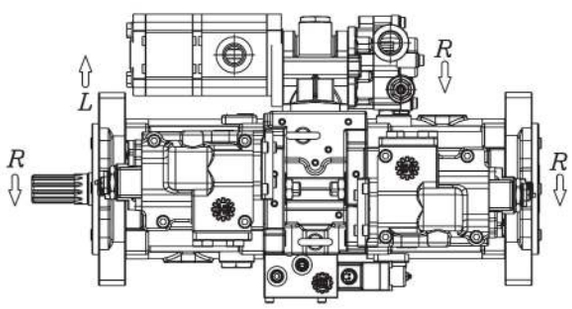

Applies in H3V63DTP & H5V80DTP for Wheel Type Excavator

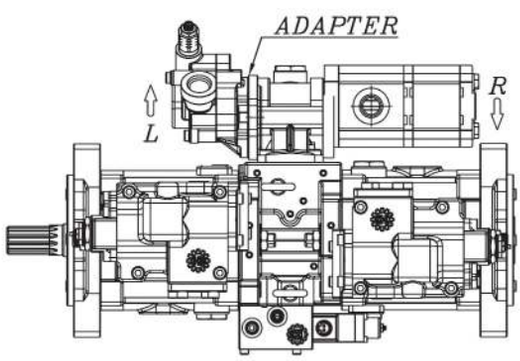

HP2D10/12/14/16/18
SWASH PLATE TYPE PISTON PUMPS

SPECIFICATIONS

MODEL	HP2D10	HP2D12	HP2D14	HP2D16	HP2D18
Discharge rate(cc/rev)	10	12	14	16	18
Max. pressure (kg/cm²)	245				
Max.speed(rpm)	2800		2600		

Dimensions of Shaft End(Spline Type)

MODEL	No.of teeth	Pitch circle dia(mm)	Module	Pressure angle	Standard
HP2D10/12/14/16/18	13	20.64	16/32	30°	SAE J498B

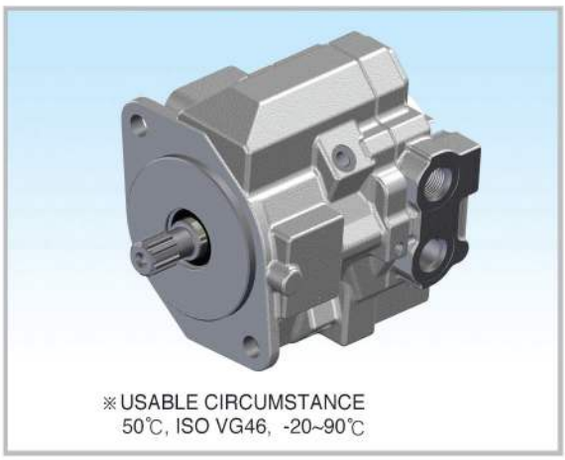

※USABLE CIRCUMSTANCE
50℃, ISO VG46, -20~90℃

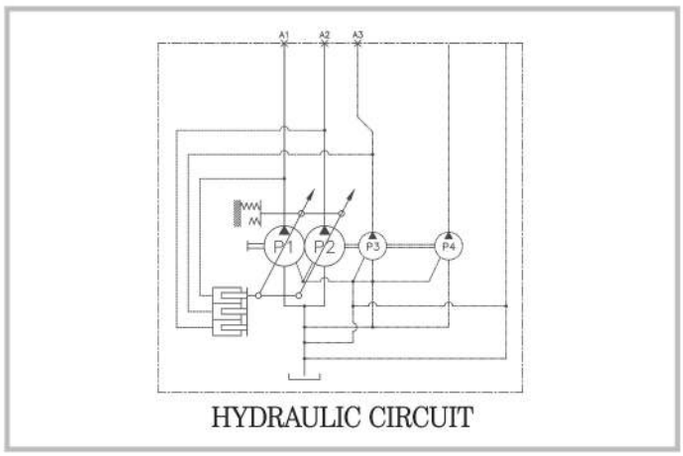

HYDRAULIC CIRCUIT

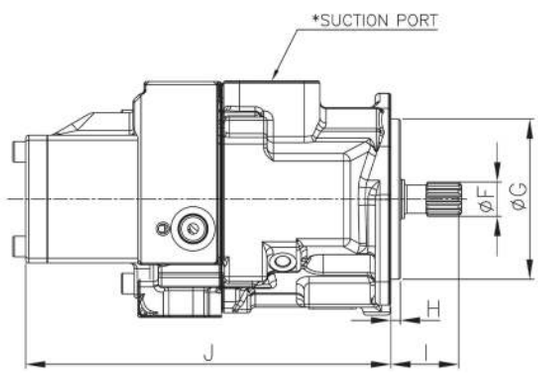

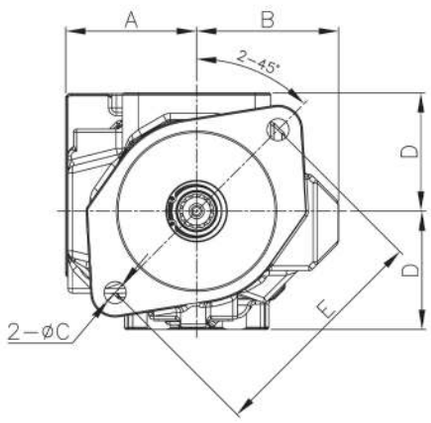

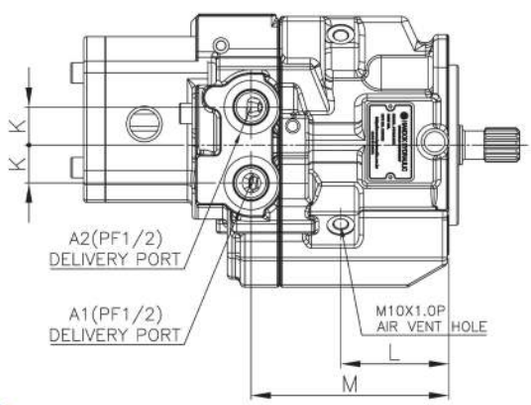

Flange Mounting face for Suction Port

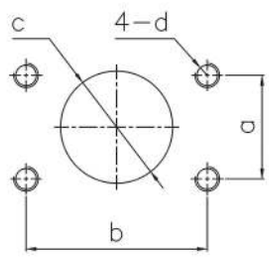

(mm)

a	35.7
b	69.9
c	ø40
d	M12x1.75P DP18

DIMENSIONS

(mm)

MODEL	SPLINE	A	B	C	D	E	F	G	H	I	J	K	L	M
HP2D10/12	13T	83	90	14	75	146	21.7	101.6	6	43	231.5	24	68.5	125.6
HP2D14/16/18		91.8	101		90				5	49.2	256	25	75	154

HP2D21/25/28
SWASH PLATE TYPE PISTON PUMPS

SPECIFICATIONS

MODEL	HP2D21/25/28		
Discharge rate(cc/rev)	21	25	28
Max. pressure (kg/cm²)	260		
Max.speed(rpm)	2600		

Dimensions of Shaft End(Spline Type)

MODEL	No.of teeth	Pitch circle dia(mm)	Module	Pressure angle	Standard
HP2D21/25/28	13	20.64	16/32	30°	SAE J498B

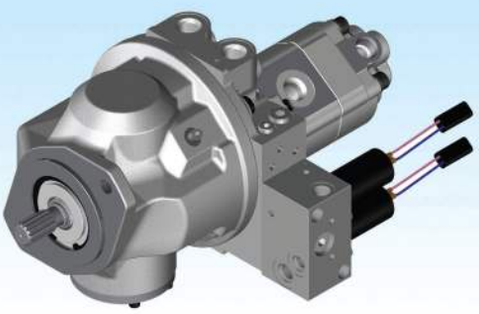

※USABLE CIRCUMSTANCE
50℃, ISO VG46, -20~90℃

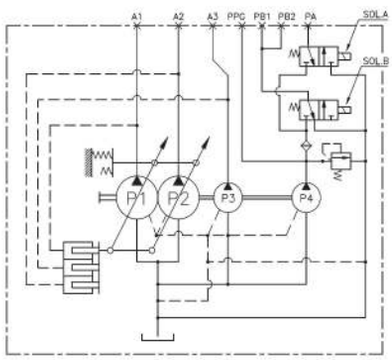

HYDRAULIC CIRCUIT

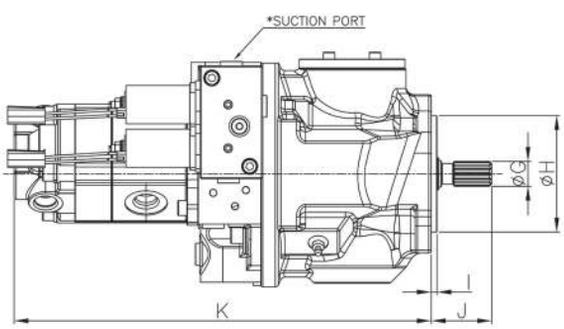

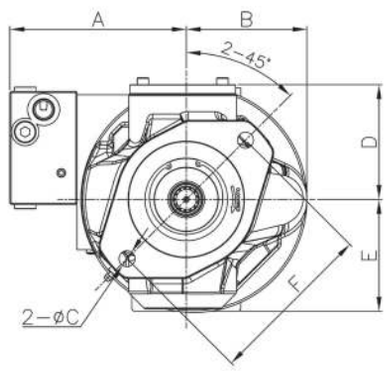

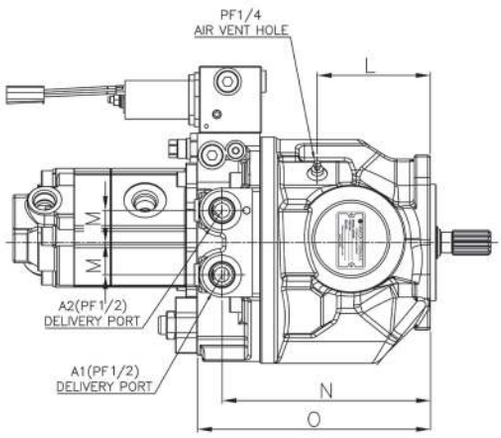

Flange Mounting face for Suction Port

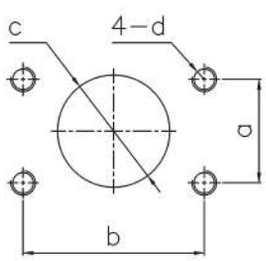

(mm)

a	35.7
b	69.9
c	ø40
d	M12x1.75P DP18

DIMENSIONS

(mm)

MODEL	SPLINE	A	B	C	D	E	F	G	H	I	J	K	L	M	N	O
HP2D21/25/28	13T	153.5	105	14	100	97.5	146	21.7	101.6	5	52.5	363.5	98.5	28	181.5	203

HP2D21/25/28-POWER SHIFT TYPE
SWASH PLATE TYPE PISTON PUMPS

SPECIFICATIONS

MODEL	HP2D21/25/28 (POWER SHIFT TYPE)
Discharge Rate (cc/rev)	21/25/28
Max. Pressure (kg/cm²)	260
Max. Speed (rpm)	2,600

Dimensions of Shaft End(Spline Type)

MODEL	No.of teeth	Pitch circle dia(mm)	Module	Pressure angle	Standard
HP2D21/25/28 (POWER SHIFT TYPE)	13	20.64	16/32	30°	SAE J498B

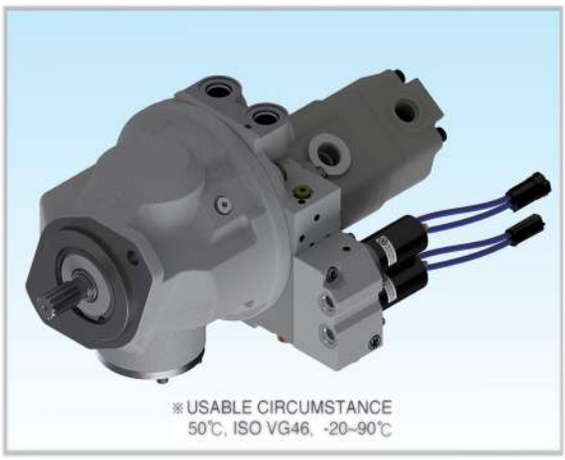

※USABLE CIRCUMSTANCE
50℃, ISO VG46, -20~90℃

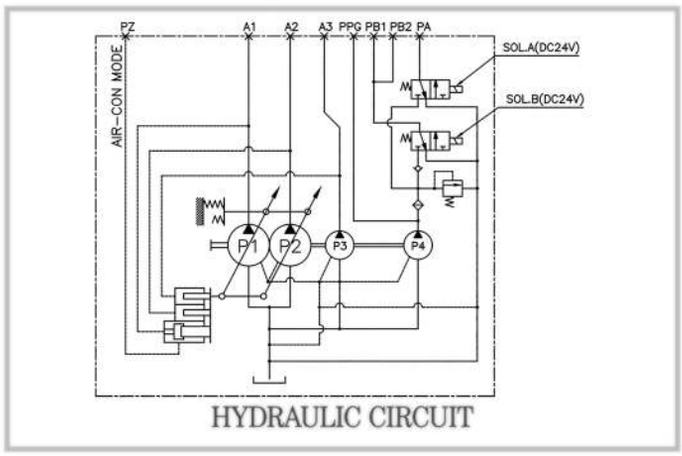

HYDRAULIC CIRCUIT

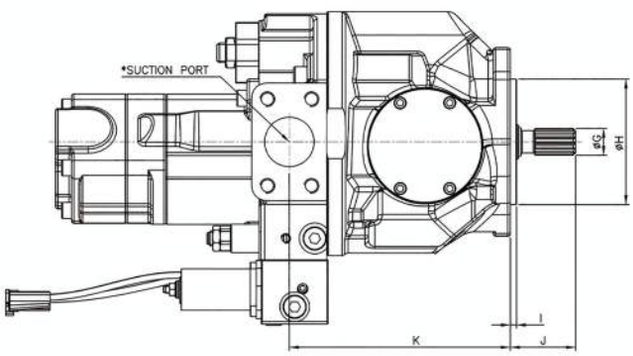

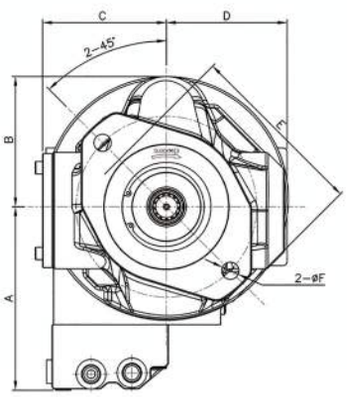

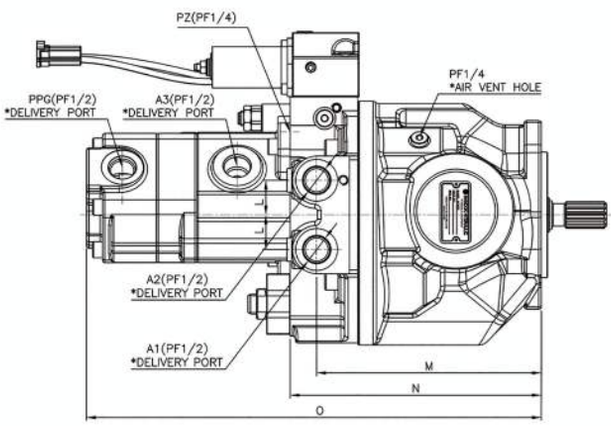

Flange Mounting face for Suction Port

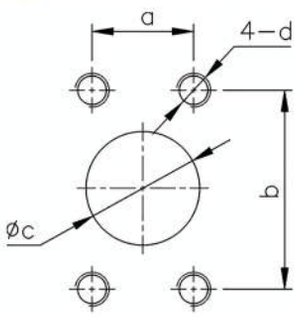

a	35.7
b	69.9
c	40
d	M12x1.75P Dp18

DIMENSIONS

(mm)

MODEL	A	B	C	D	E	F	G	H	I	J	K	L	M	N	O
HP2D21/25/28 (POWER SHIFT TYPE)	148.2	105.2	100	97.5	146	14	21.7	101.6	5	52.5	178.5	28	181.5	203	367.5

HP2D36
SWASH PLATE TYPE PISTON PUMP

SPECIFICATIONS

MODEL	HP2D36
Discharge Rate(cc/rev)	36
Max. Pressure (kg/cm²)	260
Max. Speed (rpm)	2200

Dimensions of Shaft End(Spline Type)

MODEL	No. of teeth	Pitch circle dia(mm)	Module	Pressure angle	Standard
HP2D36	14	29.634	12/24	30°	SAE J498B
	15	23.813	16/32	30°	SAE J498B

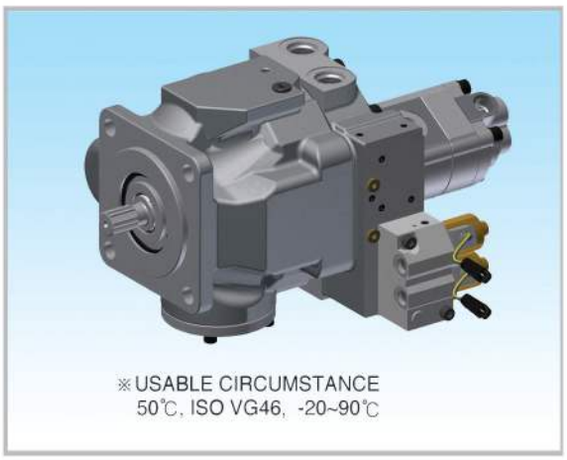

※USABLE CIRCUMSTANCE
50℃, ISO VG46, -20~90℃

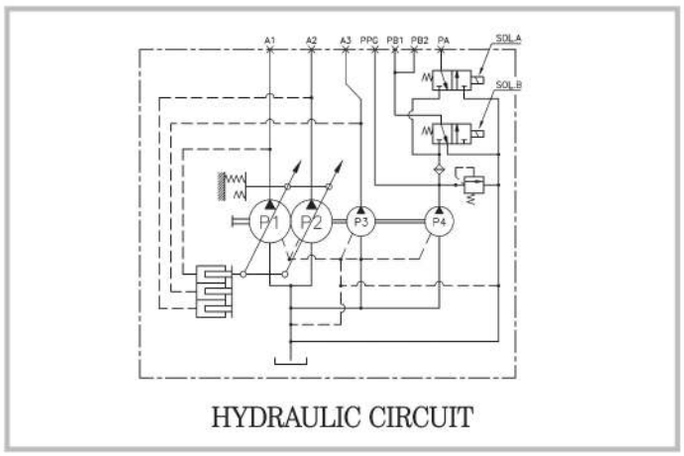

HYDRAULIC CIRCUIT

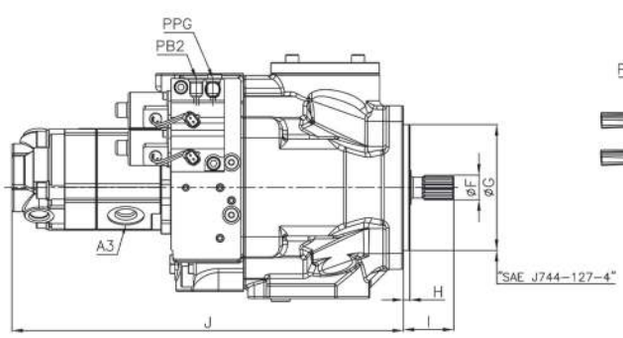

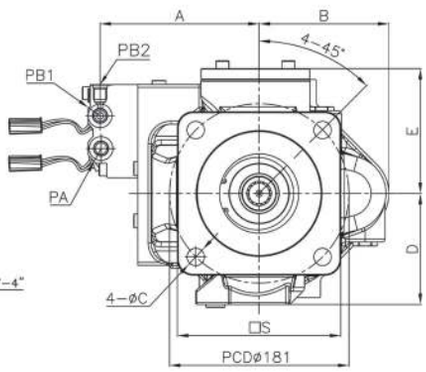

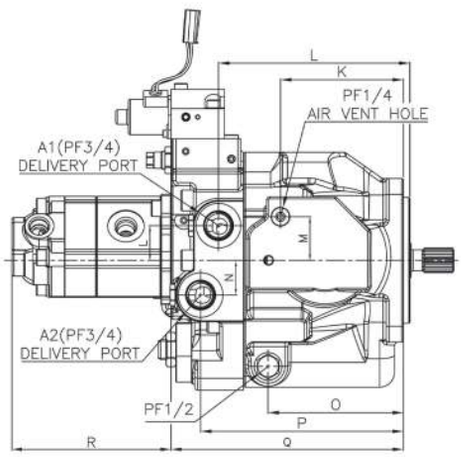

Flange Mounting face for Suction Port

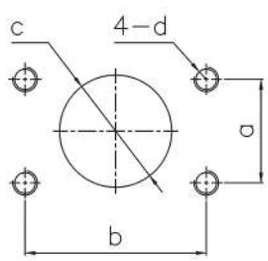

(mm)

a	50.8
b	88.9
c	ø55
d	M12x1.75P DP18

DIMENSIONS

(mm)

MODEL	SPLINE	A	B	C	D	E	F	G	H	I	J	K	L	M	N	O	P	Q	R	S
HP2D36	14T	160.5	131	21	112	126	31.2	127	6.5	50.8	395	124	186.6	44	35	136.5	204.6	234.5	160.5	165
	15T						25													

HP2D36
SWASH PLATE TYPE PISTON PUMP

SPECIFICATIONS

MODEL	HP2D36
Discharge Rate(cc/rev)	36
Max. Pressure (kg/cm²)	260
Max. Speed (rpm)	2200

Dimensions of Shaft End(Spline Type)

MODEL	No. of teeth	Pitch circle dia(mm)	Module	Pressure angle	Standard
HP2D36	14	29.634	12/24	30°	SAE J498B
	15	23.813	16/32	30°	SAE J498B

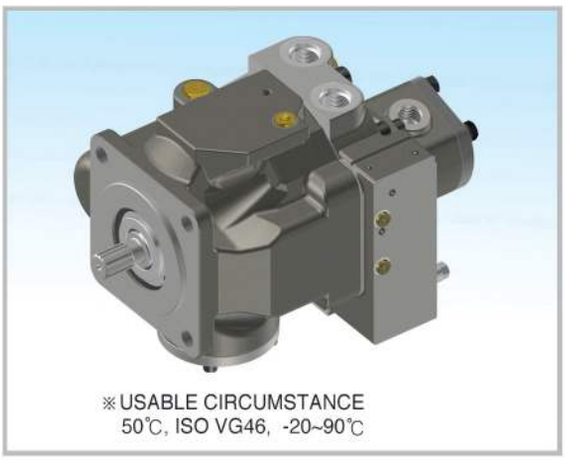

※USABLE CIRCUMSTANCE
50℃, ISO VG46, -20~90℃

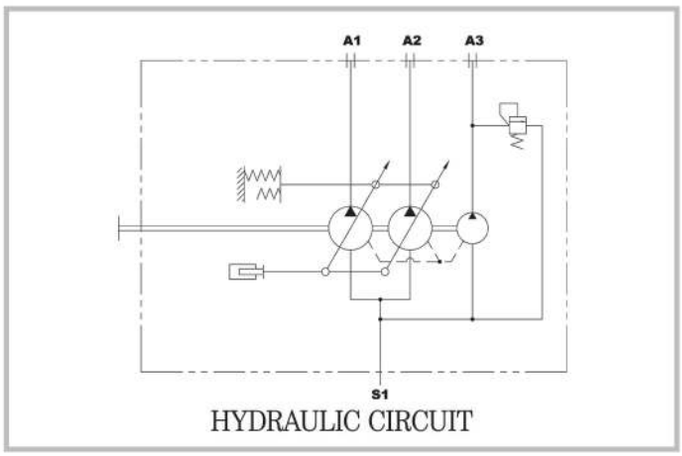

HYDRAULIC CIRCUIT

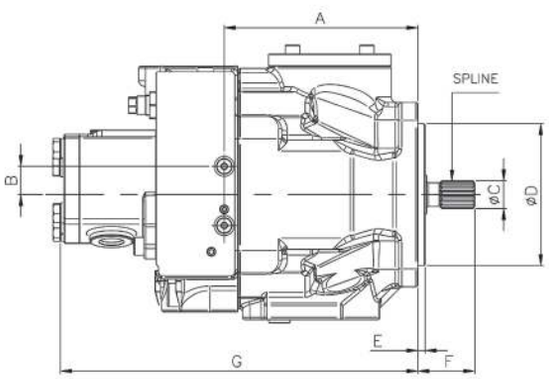

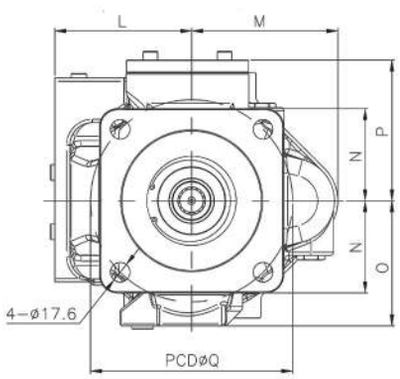

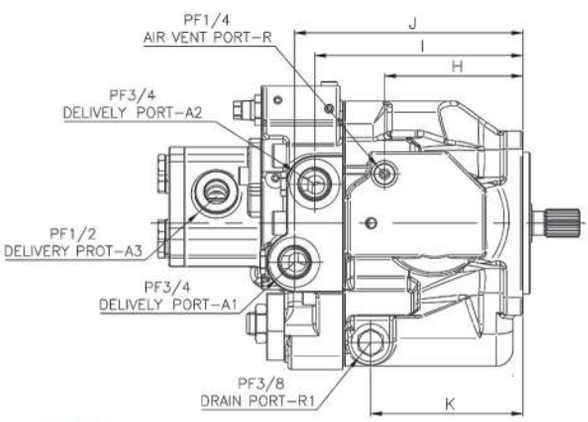

Flange Mounting face for Suction Port

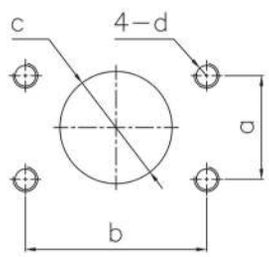

(mm)

a	50.8
b	88.9
c	ø55
d	M12x1.75P DP18

DIMENSIONS

(mm)

MODEL	SPLINE	A	B	C	D	E	F	G	H	I	J	K	L	M	N	O	P	Q
HP2D36	14T	173.5	25.5	31.2	127	6.5	51	317.5	124	186.6	204.6	136.5	122.5	131	82.5	112	126	181
	15T			25														

HP2D36 FOR HITACHI
SWASH PLATE TYPE PISTON PUMP

SPECIFICATIONS

MODEL	HP2D36(HITACHI)
Discharge Rate (cc/rev)	36
Max. Pressure (kg/cm²)	260
Max. Speed (rpm)	2200

Dimensions of Shaft End(Spline Type)

MODEL	No.of teeth	Pitch circle dia(mm)	Module	Pressure angle	Standard
HP2D36 (HITACHI)	14	29.634	12/24	30°	SAE J498B
	15	23.813	16/32	30°	SAE J498B

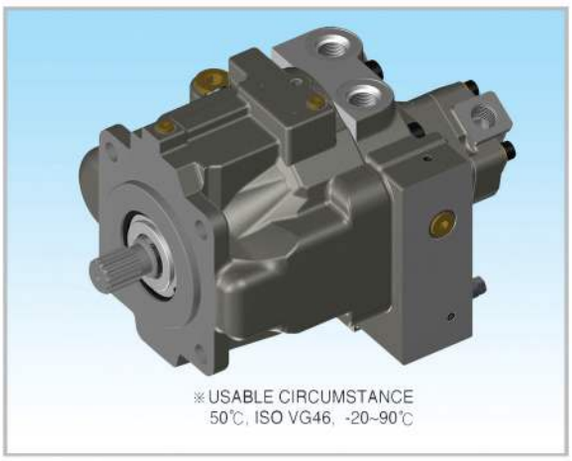

※USABLE CIRCUMSTANCE
50℃, ISO VG46, -20~90℃

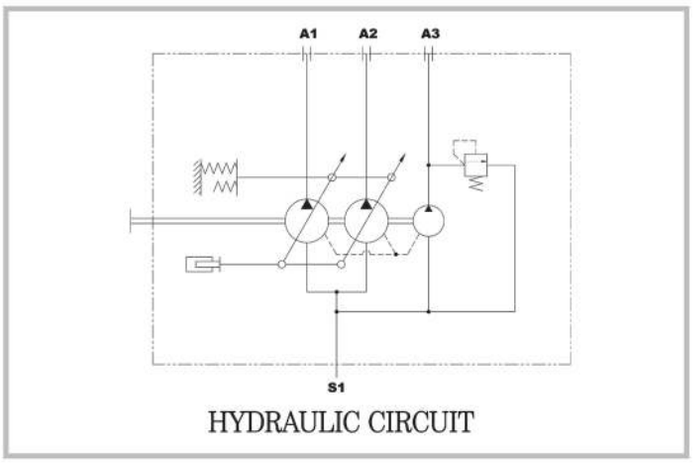

HYDRAULIC CIRCUIT

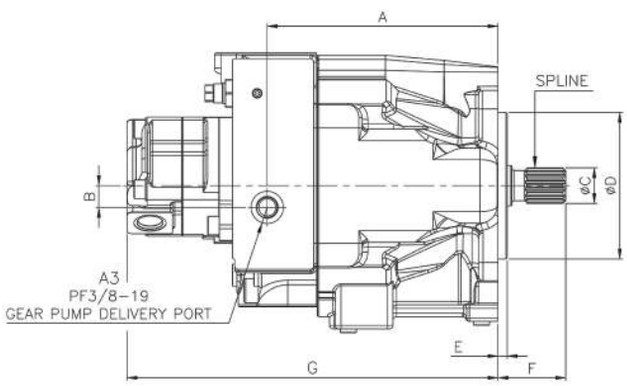

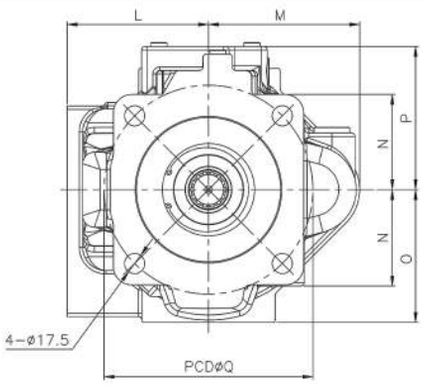

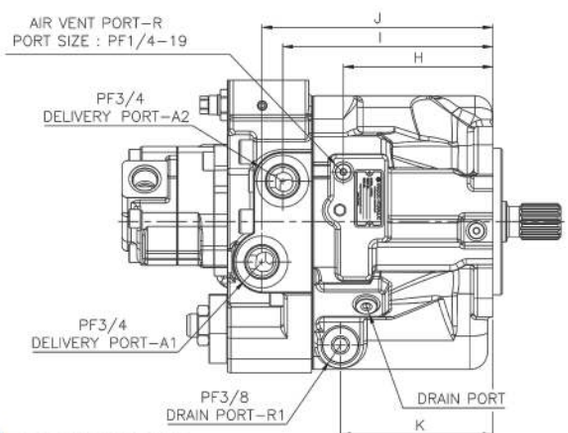

Flange Mounting face for Suction Port

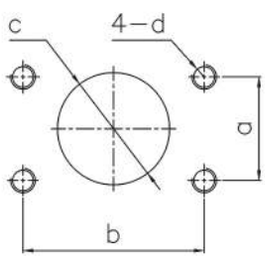

(mm)

a	50.8
b	88.9
c	ø55
d	M12x1.75P DP18

DIMENSIONS

(mm)

MODEL	SPLINE	A	B	C	D	E	F	G	H	I	J	K	L	M	N	O	P	Q
HP2D36 (HITACHI)	14T	200	18.8	31.2	127	8	58.8	321.7	129.7	182.2	200.2	132.3	122.5	131	82.5	115	124	181
	15T			25														

HP2D36 FOR HITACHI
SWASH PLATE TYPE PISTON PUMP

SPECIFICATIONS

MODEL	HP2D36(EX75)
Discharge Rate (cc/rev)	36
Max. Pressure (kg/cm²)	260
Max. Speed (rpm)	2300

Dimensions of Shaft End(Spline Type)

MODEL	No. of teeth	Pitch circle dia(mm)	Module	Pressure angle	Standard
HP2D36 (EX75)	14	29.634	12/24	30°	SAE 498B

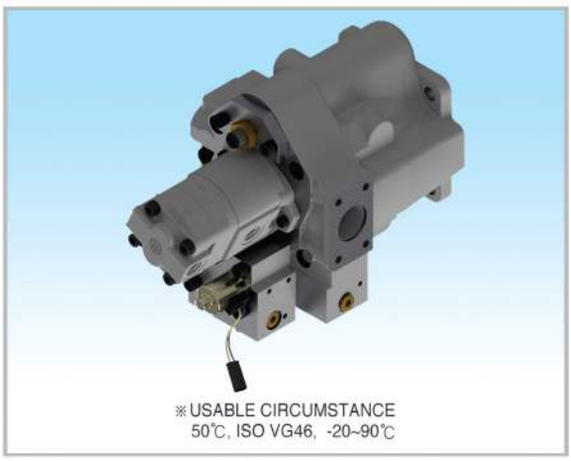

※USABLE CIRCUMSTANCE
50℃, ISO VG46, -20~90℃

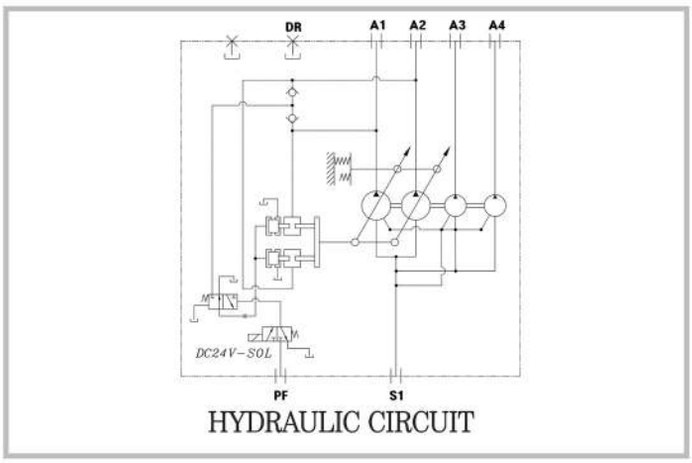

HYDRAULIC CIRCUIT

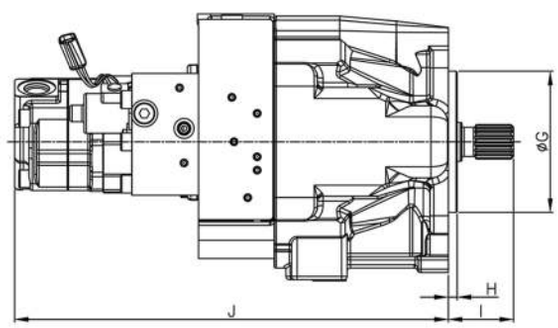

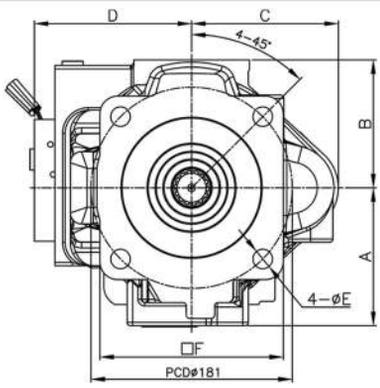

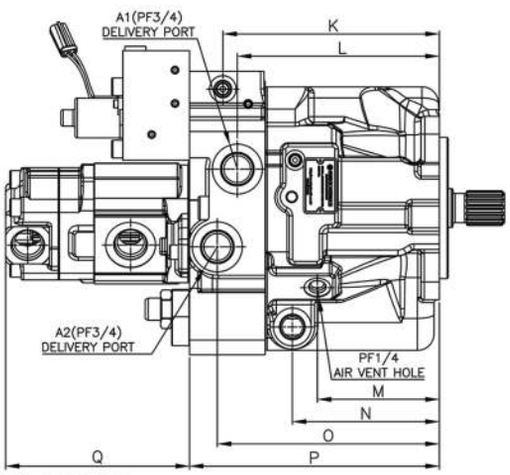

Flange Mounting face for Suction Port

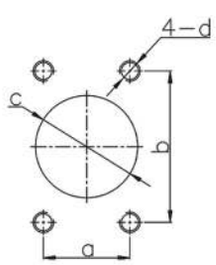

(mm)

a	42.9
b	77.8
c	Ø45
d	M12x1.75P Dp18

DIMENSIONS

(mm)

MODEL	A	B	C	D	E	F	G	H	I	J	K	L	M	N	O	P	Q
HP2D36 (EX75)	124	115	132	141.5	17.5	165	127	8	58.7	390	195	182	110	132	200	225	165.5

HP2D36 FOR HITACHI
SWASH PLATE TYPE PISTON PUMP

SPECIFICATIONS

MODEL	HP2D36(ZX70)
Discharge Rate (cc/rev)	36 / 28
Max. Pressure (kg/cm²)	260
Max. Speed (rpm)	2300

Dimensions of Shaft End(Spline Type)

MODEL	No. of teeth	Pitch circle dia(mm)	Module	Pressure angle	Standard
HP2D36 (ZX70)	14	29.634	12/24	30°	SAE 498B



※USABLE CIRCUMSTANCE
50℃, ISO VG46, -20~90℃

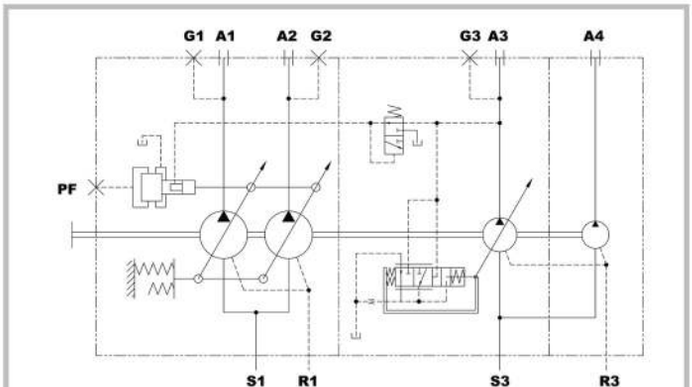

HYDRAULIC CIRCUIT

Flange Mounting face for Suction Port

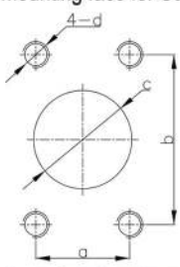

(mm)

MODEL	a	b	c	d
HP2D36(ZX70)	42.9	77.8	Ø39	M12x1.75P Dp20

Flange Mounting face for Suction Port

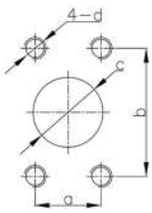

(mm)

MODEL	a	b	c	d
A10VO28LR	30.2	58.7	Ø32	M10x1.5P Dp18

Flange Mounting face for Delivery Port

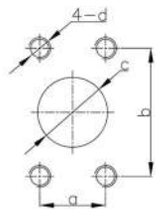

(mm)

MODEL	a	b	c	d
A10VO28LR	26.2	52.2	Ø19	M8x1.0P Dp18

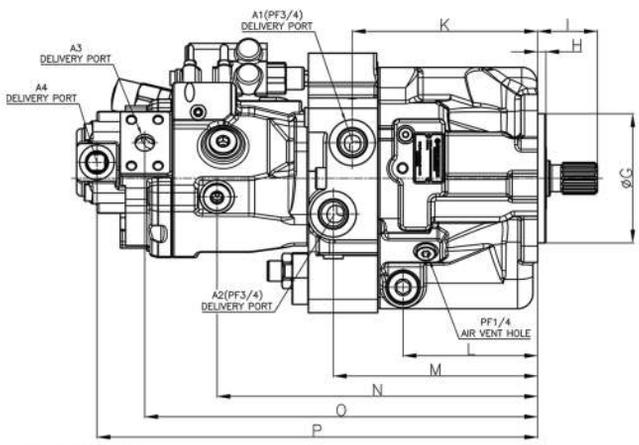

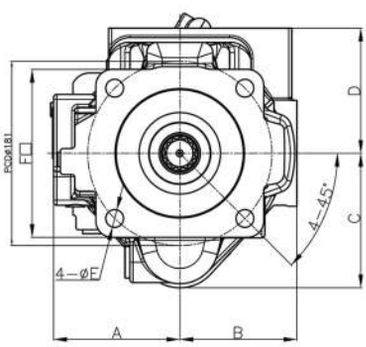

DIMENSIONS

(mm)

MODEL	A	B	C	D	E	F	G	H	I	J	K	L	M	N	O	P
HP2D36 (ZX70)	124	115	132	141.5	17.5	165	127	8	58.7	453	182.2	132.2	200.7	315	386	433

HP2D36 FOR YANMAR
SWASH PLATE TYPE PISTON PUMP

SPECIFICATIONS

MODEL	HP2D36 (YANMAR-VIO70/75)
Discharge Rate(cc/rev)	36
Max. Pressure (kg/cm²)	260
Max. Speed (rpm)	2,300

Dimensions of Shaft End(Spline Type)

MODEL	No. of teeth	Pitch circle dia (mm)	Module	Pressure angle	Standard
HP2D36 YANMAR VIO70/75	15	22.5	1.5	20°	JIS

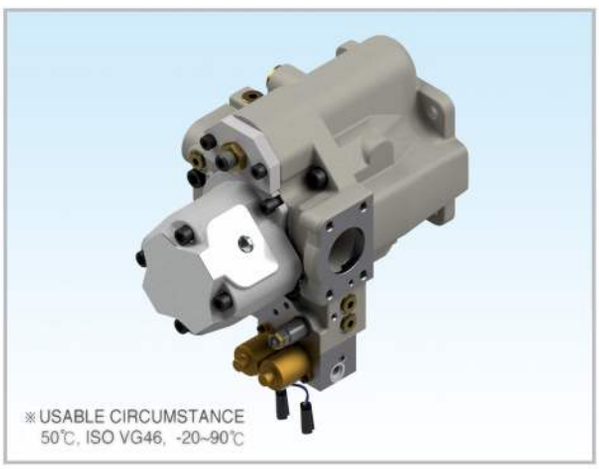

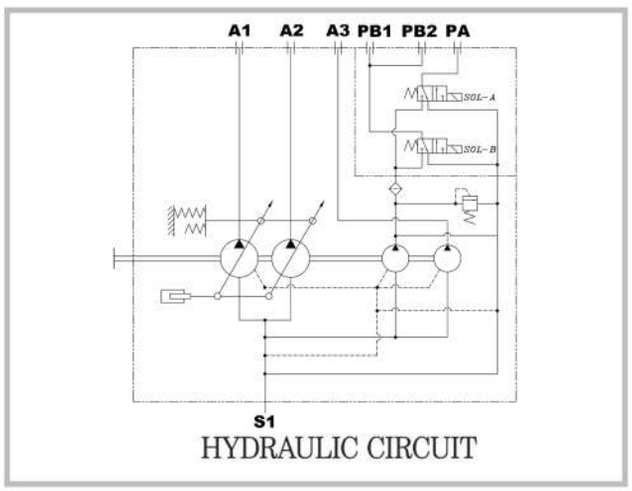

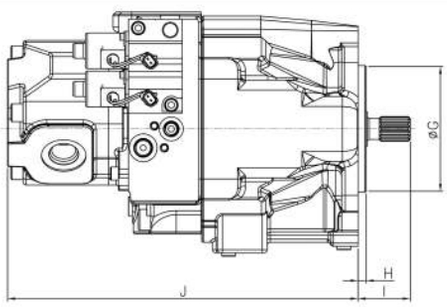

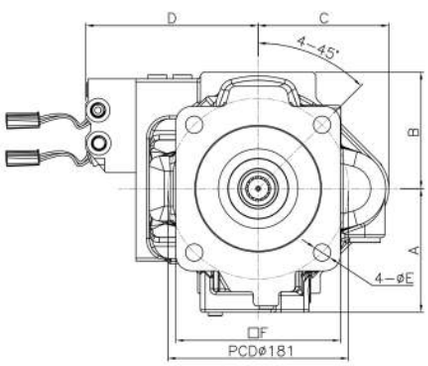

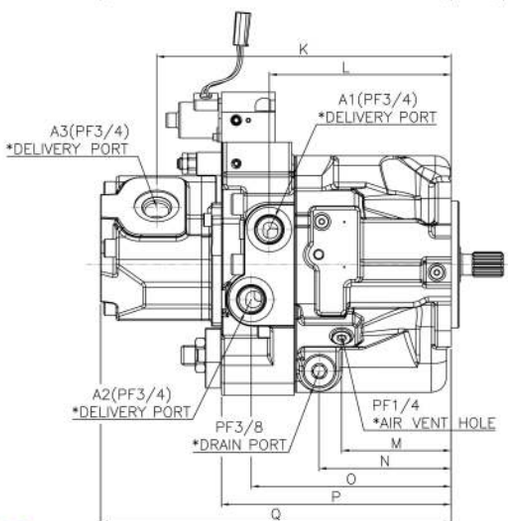

Flange Mounting face for Suction Port

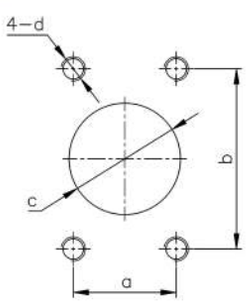

(mm)

a	50.8
b	88.9
c	55
d	M12X1.75P Dp20

DIMENSIONS

(mm)

MODEL	A	B	C	D	E	F	G	H	I	J	K	L	M	N	O	P	Q
HP2D36 YANMAR VIO70/75	124	117	131	172.5	17.5	165	125	8	52.3	351	295	182	110	132	200	230	351 / 356

HPC35 FOR CLOSE CIRCUIT SWASH PLATE PISTON PUMP

SPECIFICATIONS

MODEL	HPC35
Discharge Rate(cc/rev)	35.4
Max. Pressure (kg/cm²)	310
Max. Speed (rpm)	4,500

Dimensions of Shaft End(Spline Type)

MODEL	No. of teeth	Pitch circle dia(mm)	Module	Pressure angle	Standard
HPC35	13	20.638	16/32	30°	ANSI



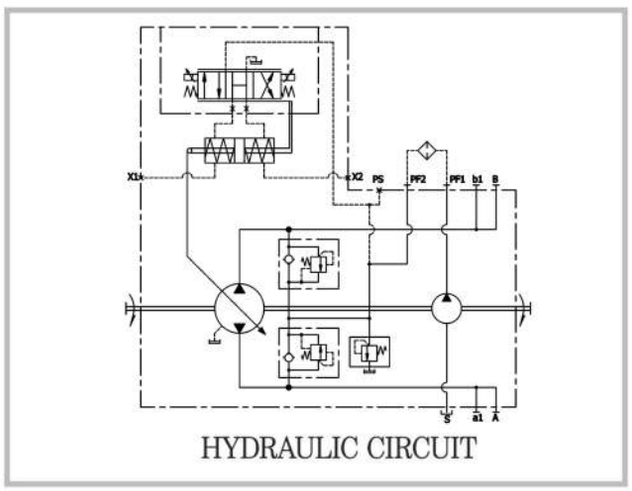

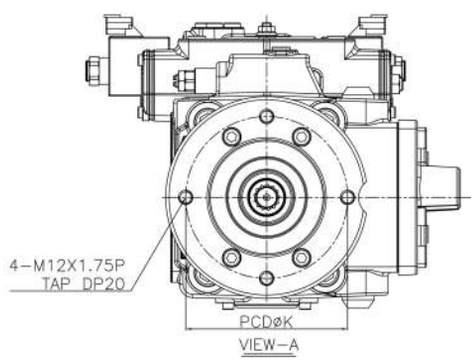

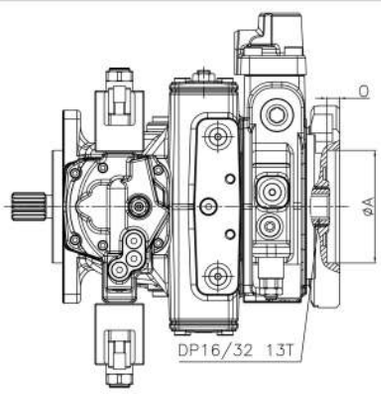

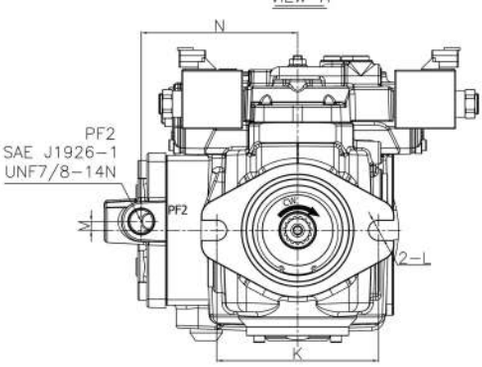

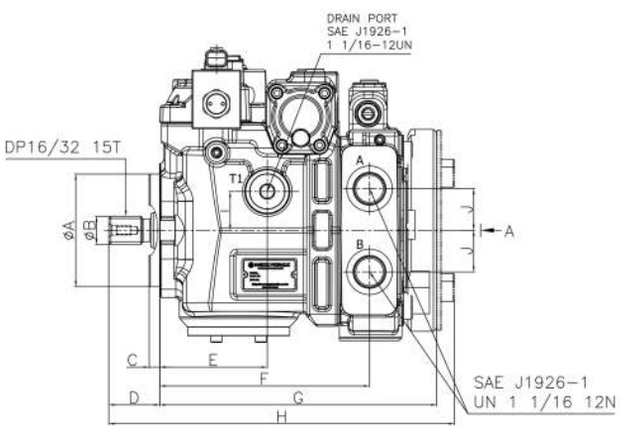

DIMENSIONS

(mm)

MODEL	A	B	C	D	E	F	G	H	I	J	K	L	M	N	O
HPC35	101.6	25.4	9.5	46	97	189	250	312	35	37.5	146	18	8	141	12

HPC90 FOR CLOSE CIRCUIT
SWASH PLATE TYPE PISTON PUMP

SPECIFICATIONS

MODEL	HPC90 (SPLINE)	HPC90 (TAPER)
Discharge Rate(cc/rev)	89	
Max. Pressure (kg/cm²)	415	
Max. Speed (rpm)	3,720	

Dimensions of Shaft End(Spline Type)

MODEL	No. of teeth	Pitch circle dia(mm)	Module	Pressure angle	Standard
HPC90	21	33.337	16/32	30°	SAE



※USABLE CIRCUMSTANCE
50℃, ISO VG46, -20~90℃

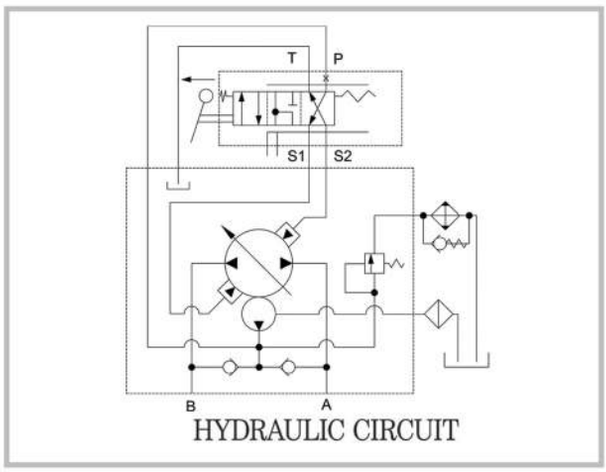

HYDRAULIC CIRCUIT

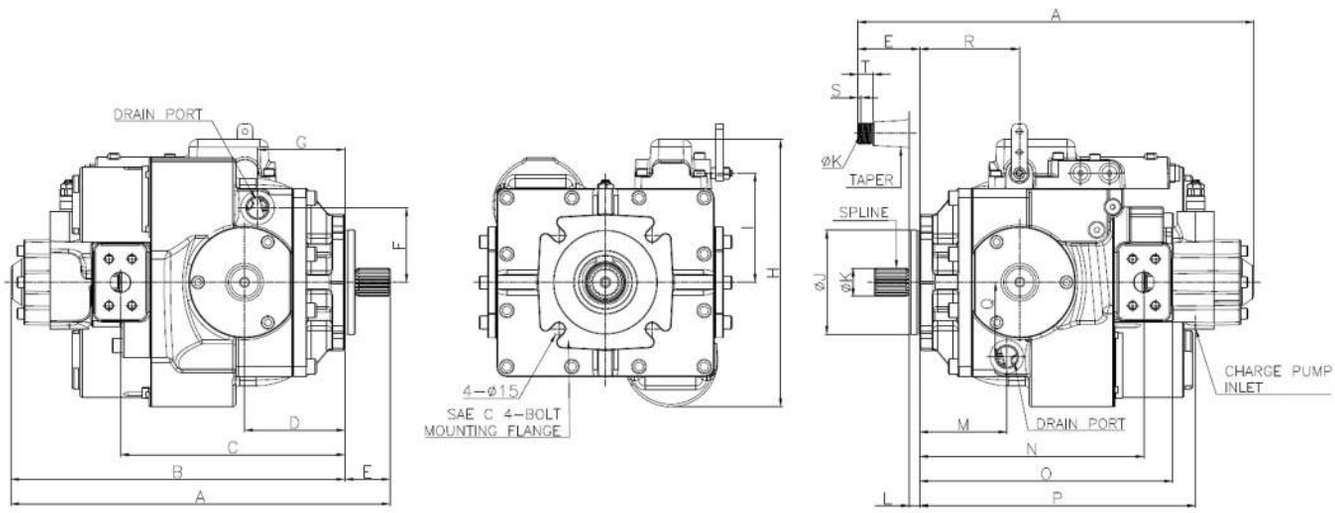

Flange Mounting face for Suction Port

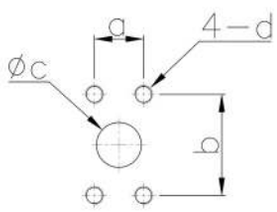

(mm)

a	27.76
b	57.15
c	25.4
d	UNC7/16 DP30

Dimensions of Shaft End(Taper Type)

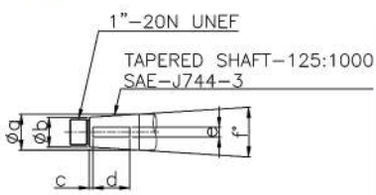

(mm)

a	35.1
b	29
c	3.6
d	36
e	9.5
f	7.2

DIMENSIONS

(mm)

MODEL	A	B	C	D	E	F	G	H	I	J	K	L	M	N	O	P	Q	R	S	T
HPC90 (SPLINE)	463.4	408.3	274	122.5	55	91	106.5	326.5	133.3	127	34.5	12.5	106.5	274	309	337	91	121.8	-	-
HPC90 (TAPER)	483.8				75.5						4								4.2	19

HSVD2-17/21/27E(WITHOUT SOLENOID TYPE) SWASH PLATE TYPE PISTON PUMPS

SPECIFICATIONS

MODEL	HSVD2-17E	HSVD2-21E	HSVD2-27E
Discharge Rate (cc/rev)	17	21	27
Max. Pressure (kg/cm²)	250		
Max. Speed (rpm)	2500	2400	

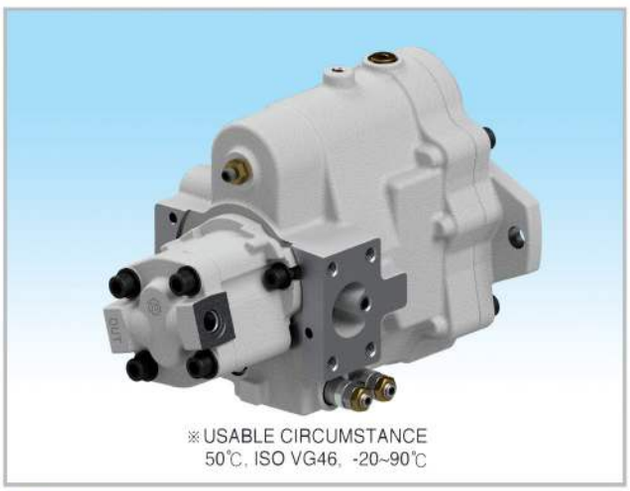

※USABLE CIRCUMSTANCE
50℃, ISO VG46, -20~90℃

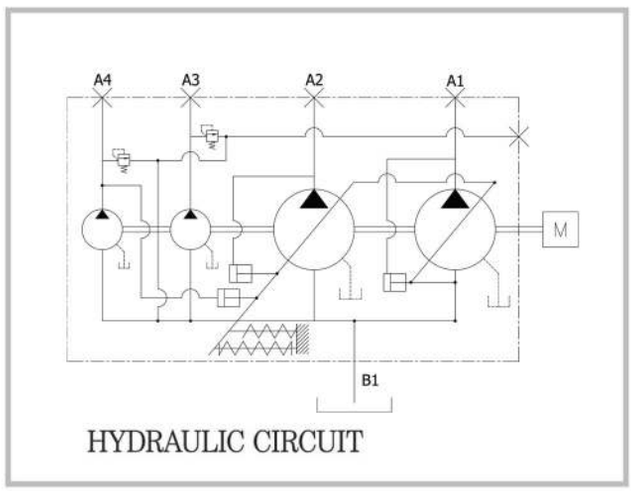

HYDRAULIC CIRCUIT

Dimensions of Shaft End (Spline Type)

MODEL	No. of teeth	Pitch circle Dia(mm)	Module	Pressure Angle	Standard
HSVD2-17E HSVD2-21E HSVD2-27E	13	20.6375	13	30°	SAE J744

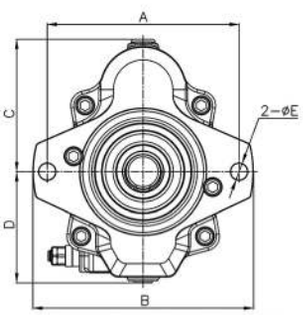

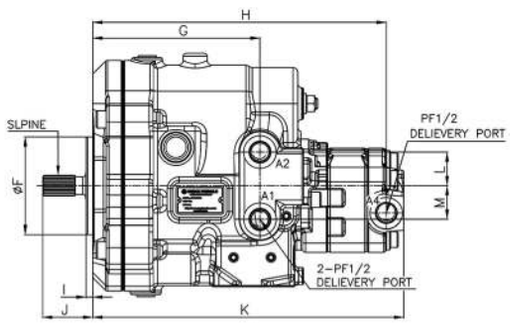

Flange Mounting face for Suction Port

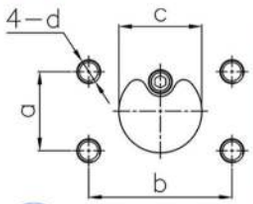

(mm)

	HSVD2-17&21E		HSVD2-27E	
a		35.7		42.9
b		69.9		77.8
c		38		45
d		M12x1.75P DP18		M12x1.75P DP18

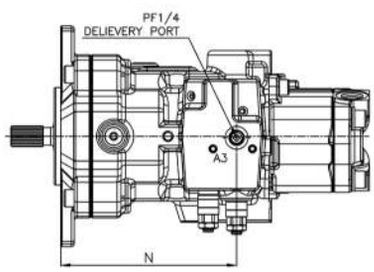

DIMENSIONS

(mm)

MODEL	A	B	C	D	E	F	G	H	I	J	K	L	M	N
HSVD2-17E	146	181	120.5	105	14	101.6	145	256	7	46	279	28	28	154
HSVD2-21E		181	120.5	108			161	276		45	300			163.5
HSVD2-27E	200	234	136	116	17.5		174	301		47	324	35	35	183

HSVD2-17/21/27E(WITH SOLENOID TYPE) SWASH PLATE TYPE PISTON PUMPS

SPECIFICATIONS

MODEL	HSVD2-17E	HSVD2-21E	HSVD2-27E
Discharge Rate (cc/rev)	17	21	27
Max. Pressure (kg/cm²)	250		
Max. Speed (rpm)	2500	2400	

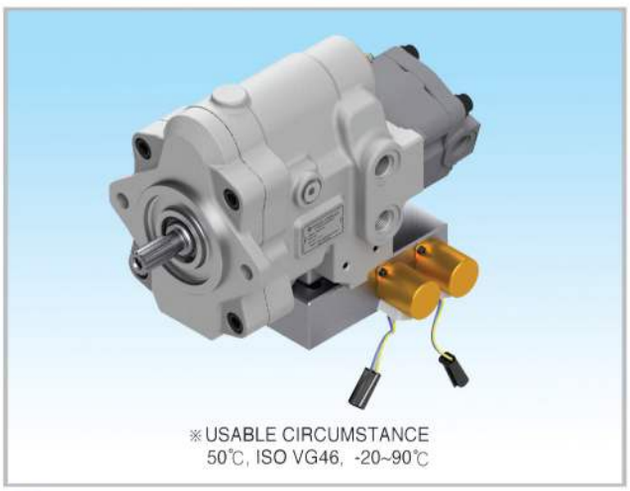

※USABLE CIRCUMSTANCE
50℃, ISO VG46, -20~90℃

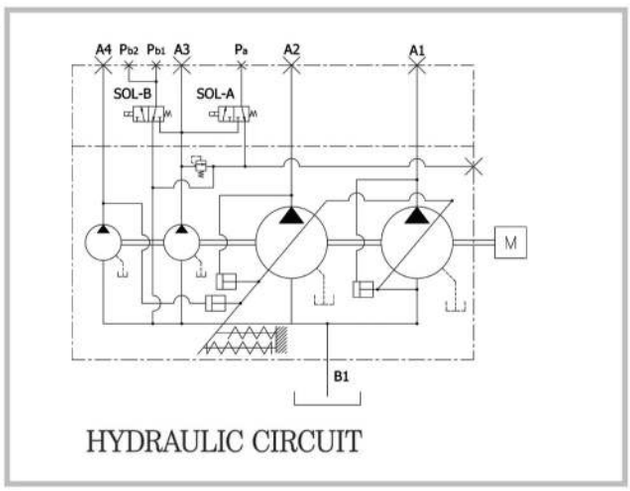

HYDRAULIC CIRCUIT

Dimensions of Shaft End (Spline Type)

MODEL	No. of teeth	Pitch circle Dia(mm)	Module	Pressure Angle	Standard
HSVD2-17E HSVD2-21E HSVD2-27E	13	20.6375	13	30°	SAE J744

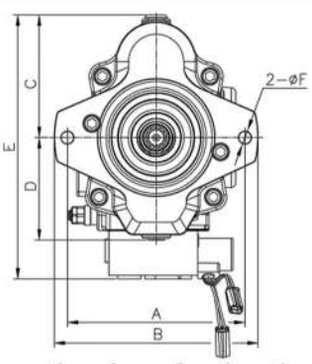

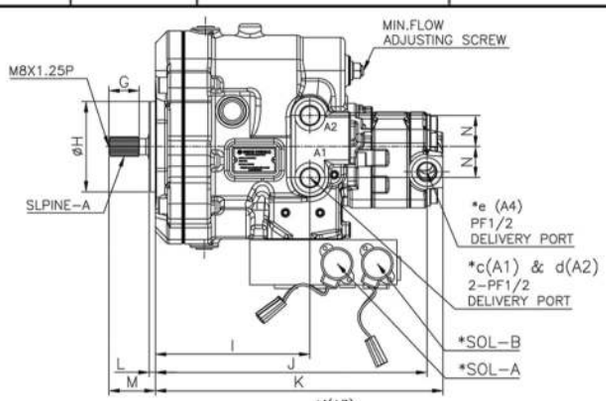

Flange Mounting face for Suction Port

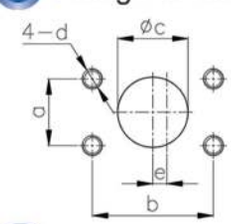

	HSVD2-17&21E	HSVD2-27E
a	35.7	42.9
b	69.9	77.8
c	38	45
d	M12x1.75P DP18	M12x1.75P DP18
e	9 / 12	14

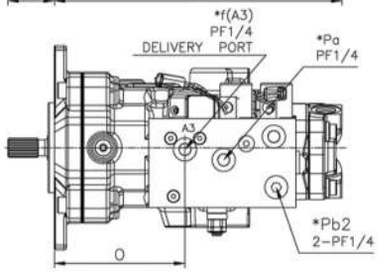

DIMENSIONS

(mm)

MODEL	A	B	C	D	E	F	G	H	I	J	K	L	M	N	O
HSVD2-17E	146	180	120	105	260	14	30	101.6	145	255	279	7	46	28	154
HSVD2-21E		192	121	108	264		34		161	276	300		55		163.5
HSVD2-27E	200	230	135.5	115.5	293	17.5			174	306	324		52	35	183

HSVD2-17/21/27E FOR KAYABA(WITH SOLENOID TYPE-3STAGE) SWASH PLATE TYPE PISTON PUMPS

SPECIFICATIONS

MODEL	HSVD2-17E	HSVD2-21E	HSVD2-27E
Discharge Rate (cc/rev)	17	21	27
Max. Pressure (kg/cm²)	250		
Max. Speed (rpm)	2500	2400	

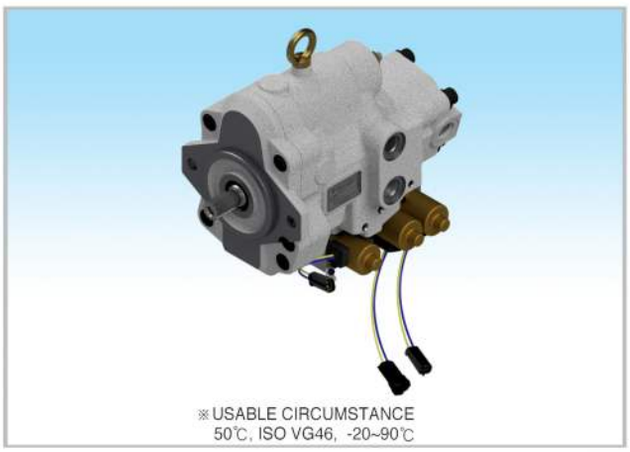

※USABLE CIRCUMSTANCE
50℃, ISO VG46, -20~90℃

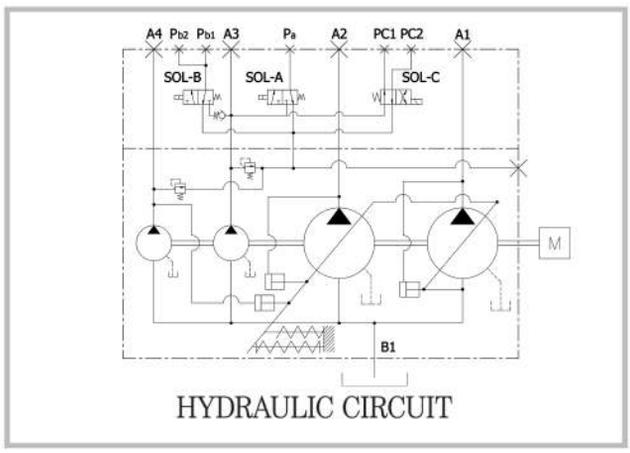

HYDRAULIC CIRCUIT

Dimensions of Shaft End (Spline Type)

MODEL	No. of teeth	Pitch Circle Dia(mm)	Module	Pressure Angle	Standard
HSVD2-17E HSVD2-21E HSVD2-27E	13	20.6375	13	30°	SAE J744

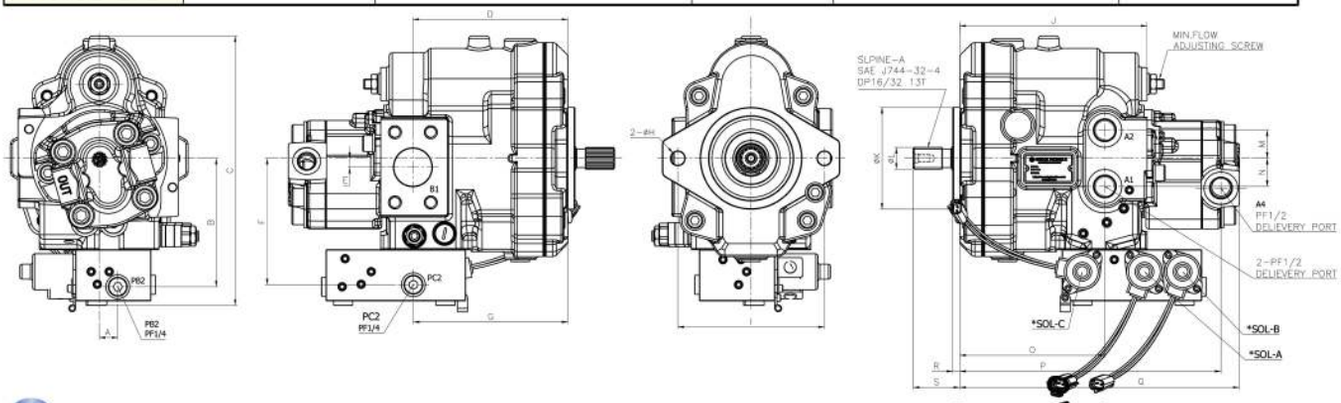

Flange Mounting face for Suction Port

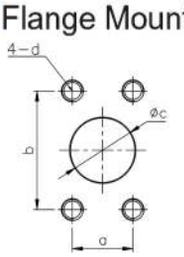

a	HSVD2-17&21E	35.7	HSVD2-27E	42.9
b		69.9		77.8
c		38		45
d		M12x1.75P DP18		M12x1.75P DP18
e		9 / 12		14

DIMENSIONS

(mm)

MODEL	A	B	C	D	E	F	G	H	I	J	K	L	M	N	O	P	Q	R	S	T	U	V	W	X	Y
HSVD2-17E	18.5	128	268.5	155	9	126	154	14	146	187	101.6	21.7	28	28	145	260	279	7	46.4	35.5	47.5	122	154	184	225
HSVD2-21E		132	275.5	173	11	130	166.5			206					161	286	304		57.2	36.5	53.5	134.5	166.5	196.5	237.5
HSVD2-27E		143	299.5	188	14	141	183.5	17.5	200	220			35	35	174	306	324		52.3	35.5	55	151	183	213	254

HSVL-42 FOR KUBOTA / CATERPILLAR SWASH PLATE TYPE PISTON PUMP

SPECIFICATIONS

MODEL	HSVL-42	
	KUBOTA TYPE	CATERPILLAR TYPE
Discharge Rate (cc/rev)	42	36
Max. Pressure (kg/cm²)	250	
Max. Speed (rpm)	2250	

Dimensions of Shaft End(Spline Type)

MODEL		No.of teeth	Pitch circle dia(mm)	Module	Pressure angle	Standard
HSVL-42	KUBOTA TYPE	13	20.638	16/32	30°	SAE J498B
	CATERPILLAR TYPE	15	23.813			

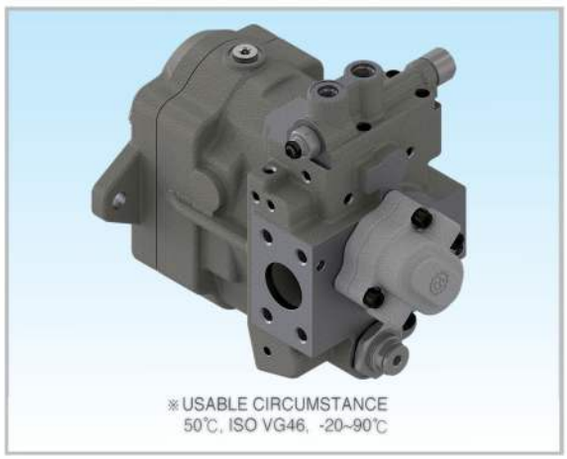

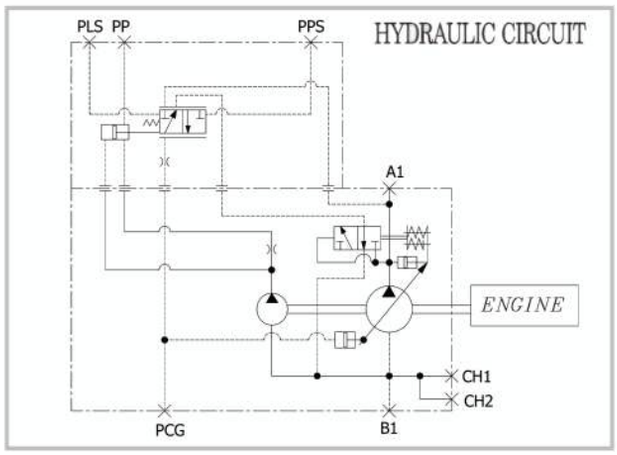

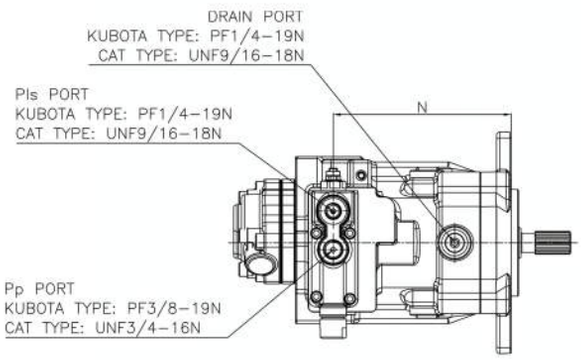

Flange Mounting face for Suction Port

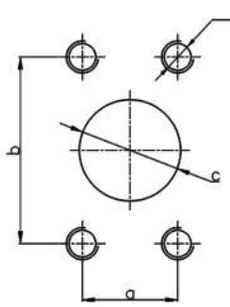

(mm)

a	35.7
b	69.9
c	Ø38
d	M12x1.75p DP24

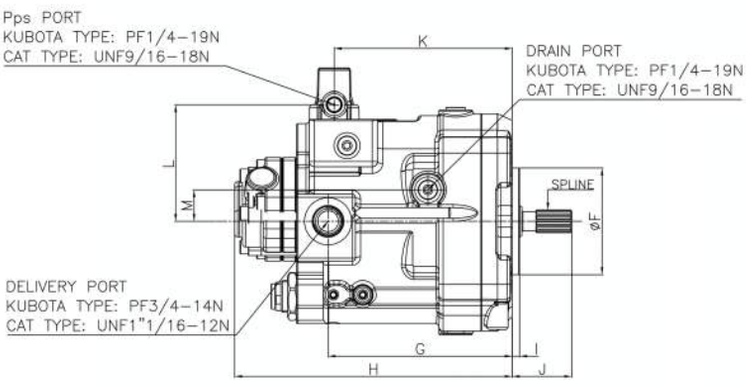

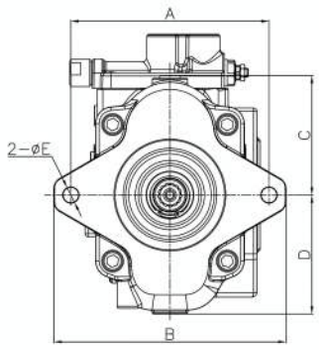

DIMENSIONS

(mm)

MODEL		A	B	C	D	E	F	G	H	I	J	K	L	M
HSVL-42	KUBOTA TYPE	180	211	109	108	14	101.6	175.3	264.3	7	56.7	169.5	111	30
	CATERPILLAR TYPE										47.6			

HVD-00B/0B/1B (WITHOUT SOLENOID)
SWASH PLATE TYPE PISTON PUMPS

SPECIFICATIONS

MODEL	HVD-00B	HVD-0B	HVD-1B
Discharge Rate(cc/rev)	8 x 2	9 x 2	16 x 2
Max. Pressure (kg/cm²)	240		
Max. Speed (rpm)	2,800		

Dimensions of Shaft End(Spline Type)

MODEL	No. of teeth	Pitch circle dia(mm)	Module	Pressure angle	Standard
HVD-00B	10	15.875	16/32	30°	SAE J498B
HVD-0B&1B	13	20.64			



※USABLE CIRCUMSTANCE
50℃, ISO VG46, -20~90℃

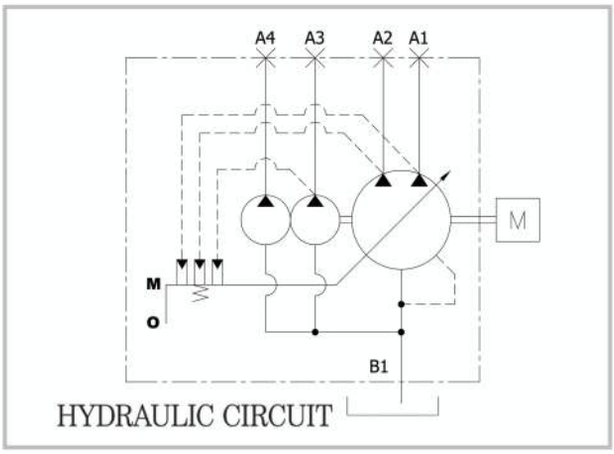

HYDRAULIC CIRCUIT

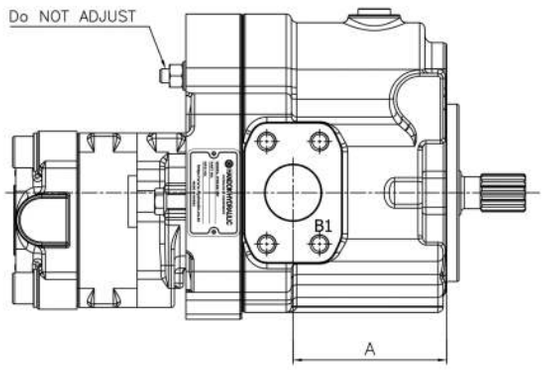

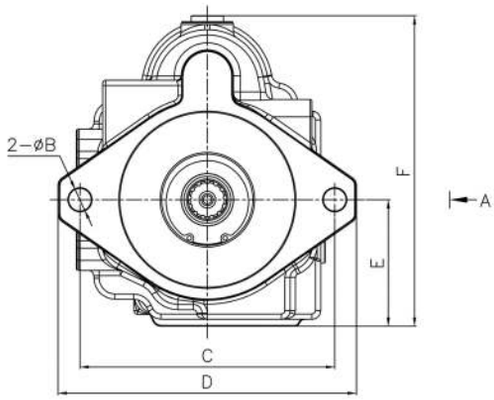

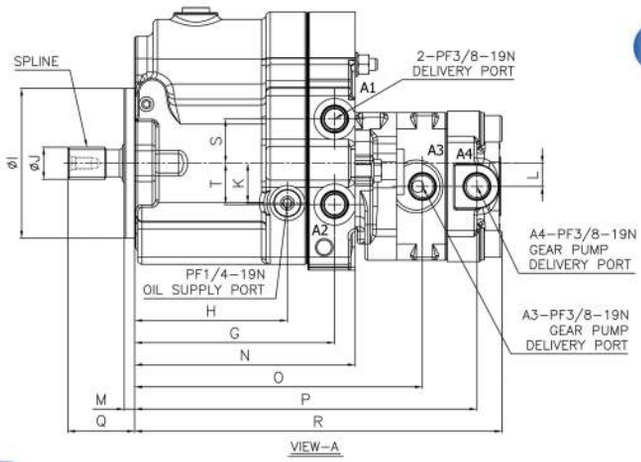

Flange Mounting face for Suction Port

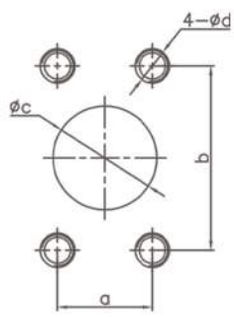

(mm)

	HVD-00B	HVD-0B & 1B
a	26.2	30.2
b	52.4	58.7
c	28 SAE J518 1 1/4	32 SAE J518 1 1/4
d	M10x1.5P DP20	M10x1.5P DP17

DIMENSIONS

(mm)

MODEL	A	B	C	D	E	F	G	H	I	J	K	L	M	N	O	P	Q	R	S	T
HVD-00B	73	13	146	170	67	147	110	103.5	101.6	16.9	27	15.7	7	129	170	211	45	229	25	19
HVD-0B	88			171	68.5	178	135.5			21.7				150	195	232		249	30	28
HVD-1B							136.5							159	204	241		258		

HVD-0B/1B (WITH SOLENOID)
SWASH PLATE TYPE PISTON PUMPS

SPECIFICATIONS

MODEL	HVD-0B	HVD-1B
Discharge Rate(cc/rev)	9 x 2	16 x 2
Max. Pressure (kg/cm²)	210	
Max. Speed (rpm)	2,300	

Dimensions of Shaft End(Spline Type)

MODEL	No. of teeth	Pitch circle dia(mm)	Module	Pressure angle	Standard
HVD-0B HVD-1B	13	20.64	16/32	30°	SAE



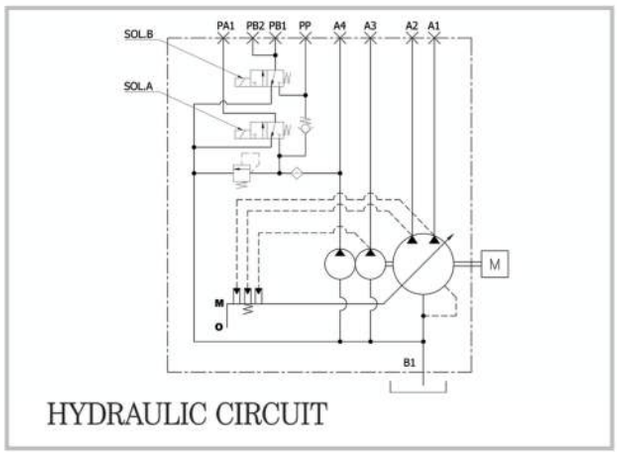

HYDRAULIC CIRCUIT

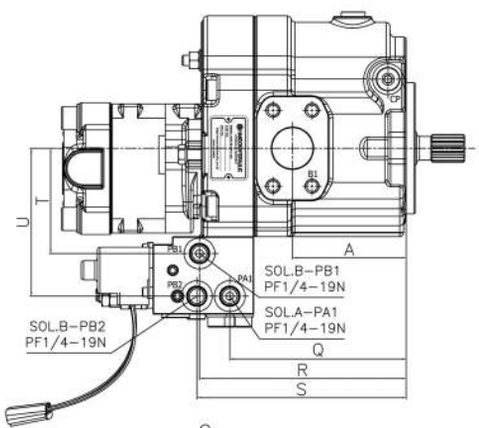

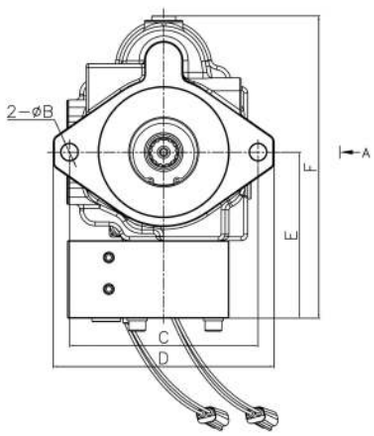

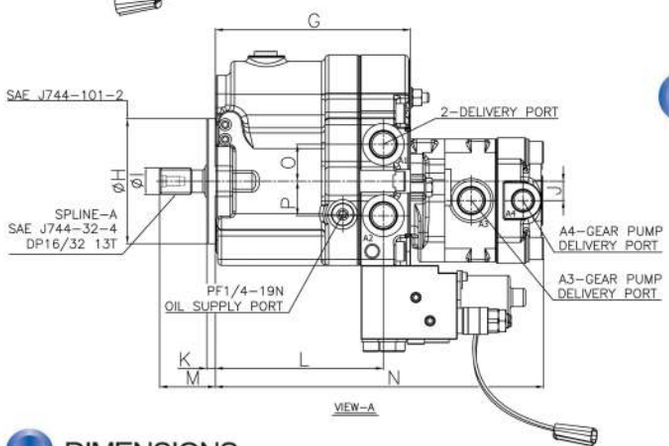

Flange Mounting face for Suction Port

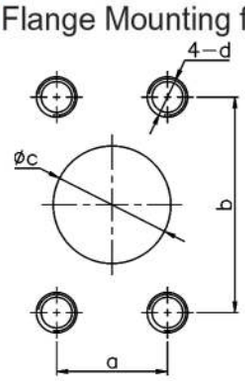

(mm)

a	30.2
b	58.7
c	32 SAE J518 1 1/4
d	M10x1.5P DP17

DIMENSIONS

(mm)

MODEL	A	B	C	D	E	F	G	H	I	J	K	L	M	N	O	P	Q	R	S	T	U
HVD-0B	88	13	146	171	128.5	234	158.5	101.6	21.7	15.7	7	136.5	45.3	267	30	28	136.5	160	162	81.5	114.5
HVD-1B																					

HVD-1B-32P/32CP (WITH SOLENOID TYPE)
SWASH PLATE TYPE PISTON PUMPS

SPECIFICATIONS

MODEL	HVD-2B-32P	HVD-2B-32CP
Discharge Rate(cc/rev)	16 x 2	
Max. Pressure (kg/cm²)	210	
Max. Speed (rpm)	2,300	

Dimensions of Shaft End(Spline Type)

MODEL	No. of teeth	Pitch circle dia(mm)	Module	Pressure angle	Standard
HVD-1B-32P HVD-1B-32CP	13	20.64	16/32	30°	SAE

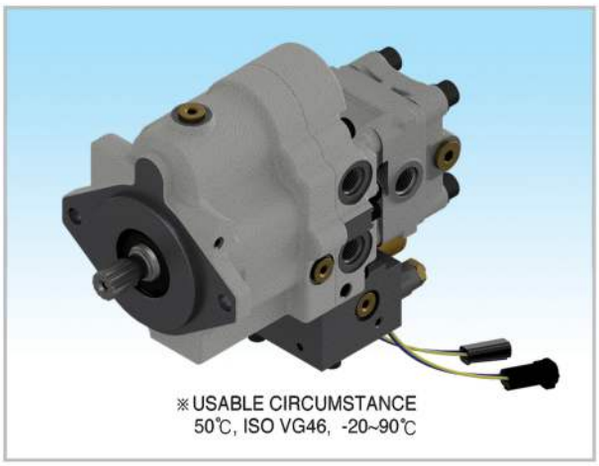

※USABLE CIRCUMSTANCE
50℃, ISO VG46, -20~90℃

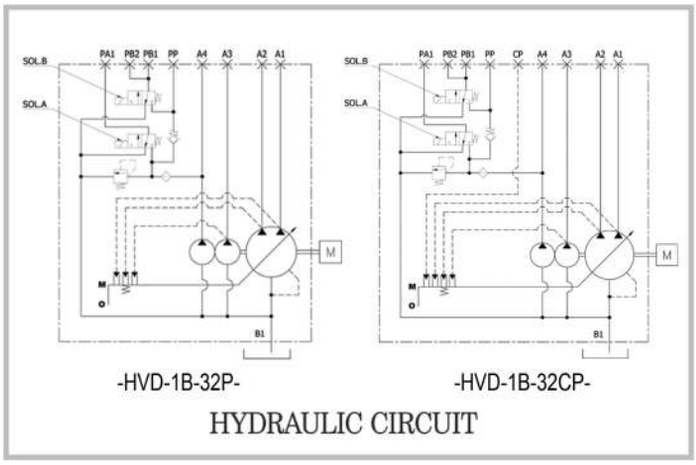

-HVD-1B-32P- -HVD-1B-32CP-

HYDRAULIC CIRCUIT

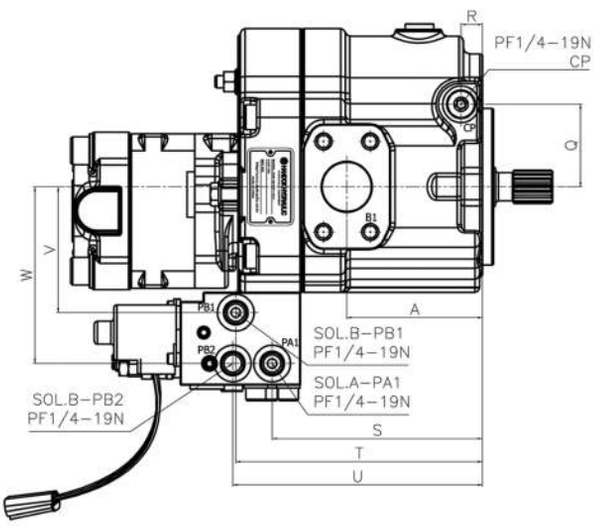

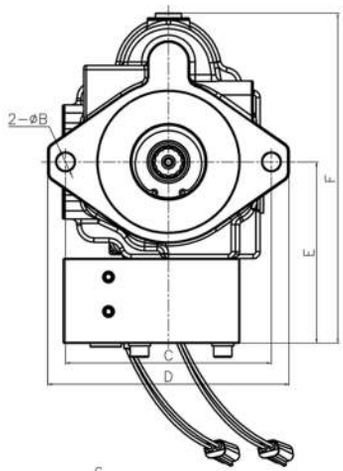

Flange Mounting face for Suction Port

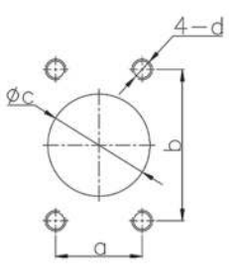

(mm)

a	30.2
b	58.7
c	33
d	M10x1.5P DP17

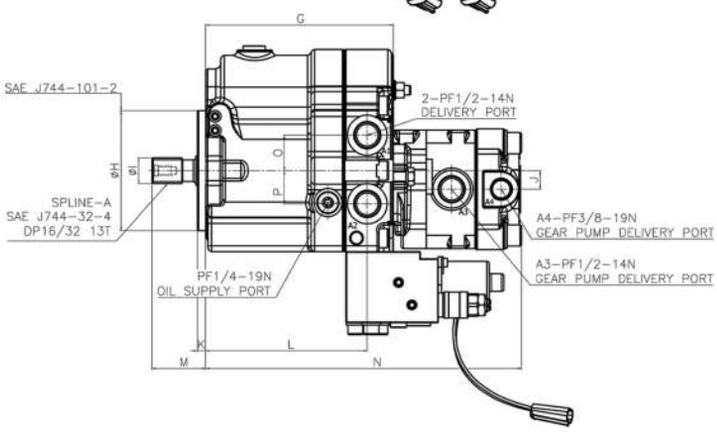

DIMENSIONS

(mm)

MODEL	A	B	C	D	E	F	G	H	I	J	K	L	M	N	O	P	Q	R	S	T	U	V	W
HVD-1B-32P	88	13	146	171	72.5	178	158.5	101.6	21.7	15.7	7	136.5	45.3	266.9	30	28	–	–	136.5	160	162	81.5	114.5
HVD-1B-32CP																	53.5	14					

HVD-1B-32P/32CP (WITHOUT SOLENOID TYPE)
SWASH PLATE TYPE PISTON PUMPS

SPECIFICATIONS

MODEL	HVD-2B-32P	HVD-2B-32CP
Discharge Rate(cc/rev)	16 x 2	
Max. Pressure (kg/cm²)	210	
Max. Speed (rpm)	2,300	

Dimensions of Shaft End(Spline Type)

MODEL	No. of teeth	Pitch circle dia(mm)	Module	Pressure angle	Standard
HVD-1B-32P HVD-1B-32CP	13	20.64	16/32	30°	SAE



※USABLE CIRCUMSTANCE
50℃, ISO VG46, -20~90℃

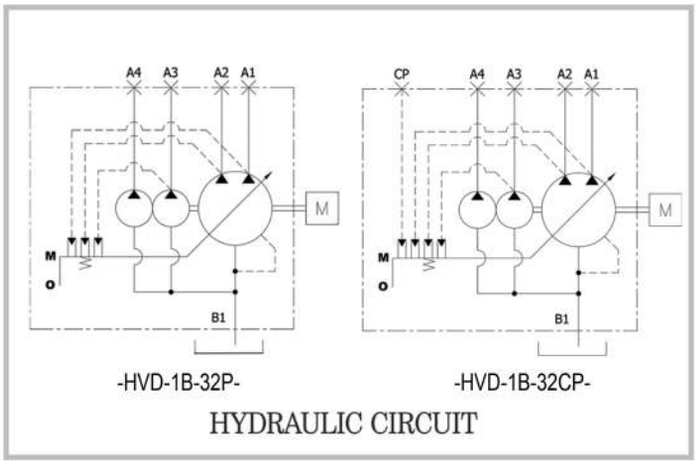

HYDRAULIC CIRCUIT

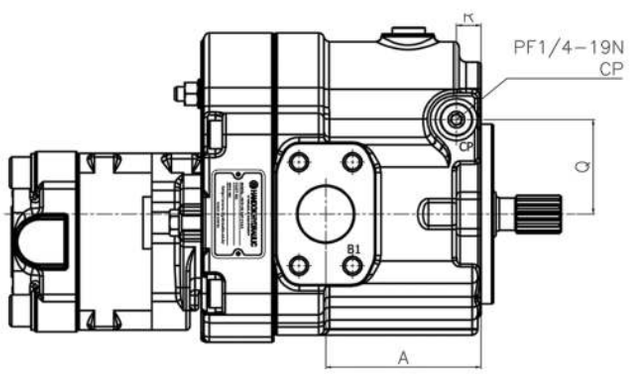

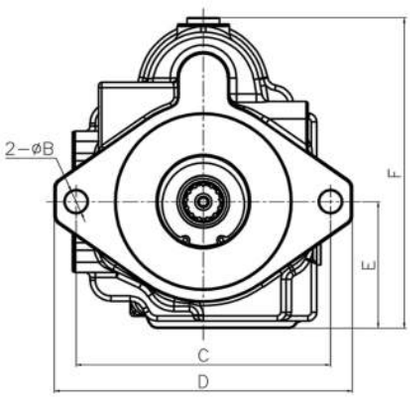

Flange Mounting face for Suction Port

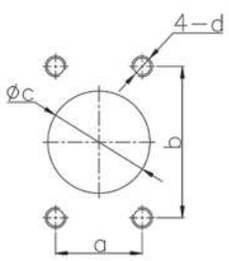

(mm)

a	30.2
b	58.7
c	33
d	M10x1.5P DP17

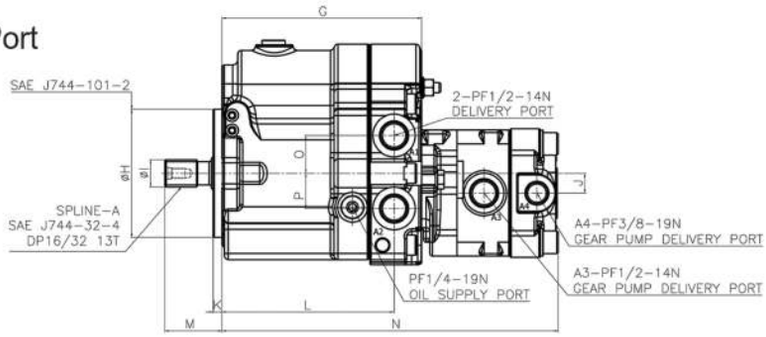

DIMENSIONS

(mm)

MODEL	A	B	C	D	E	F	G	H	I	J	K	L	M	N	O	P	Q	R
HVD-1B-32P	88	13	146	171	72.5	178	158.5	101.6	21.7	15.7	7	136.5	45.3	266.9	30	28	-	-
HVD-1B-32CP																	53.5	14

HVD-2B-32/36/38/40/42
SWASH PLATE TYPE PISTON PUMPS

SPECIFICATIONS

MODEL	HVD-2B				
	32	36	38	40	42
Discharge Rate(cc/rev)	16 x 2	18 x 2	19 x 2	20 x 2	21 x 2
Max. Pressure (kg/cm²)	230				
Max. Speed (rpm)	2200				

Dimensions of Shaft End(Spline Type)

MODEL	No. of teeth	Pitch circle dia(mm)	Module	Pressure angle	Standard
HVD-2B-32/36/38/40/42	13	20.64	16/32	30°	SAE J498B



※USABLE CIRCUMSTANCE
50℃, ISO VG46, -20~90℃

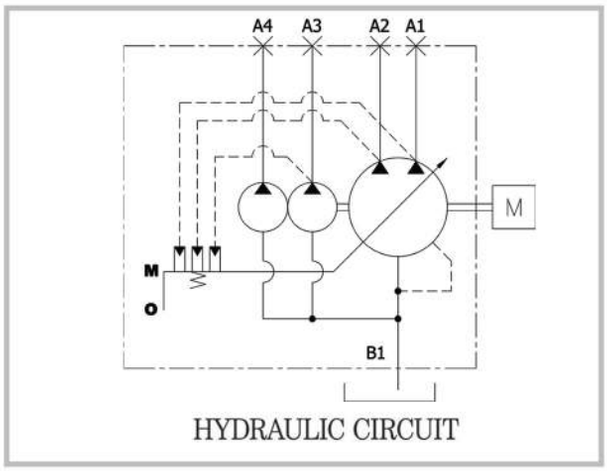

HYDRAULIC CIRCUIT

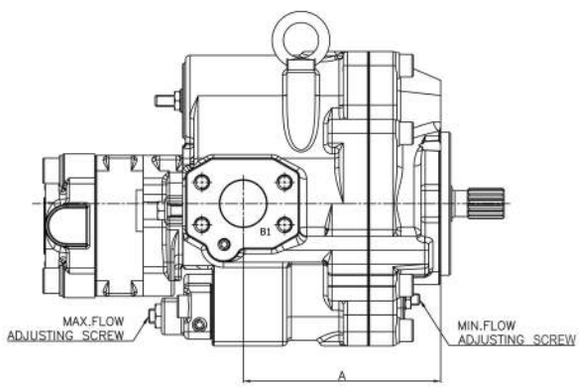

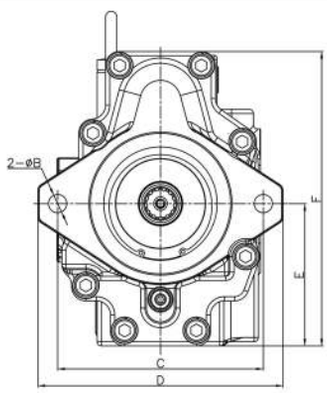

Flange Mounting face for Suction Port

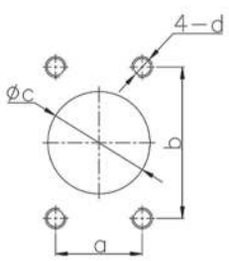

(mm)

a	30.2
b	58.7
c	32 SAE J1518 1 1/4
d	M10x1.5P DP17

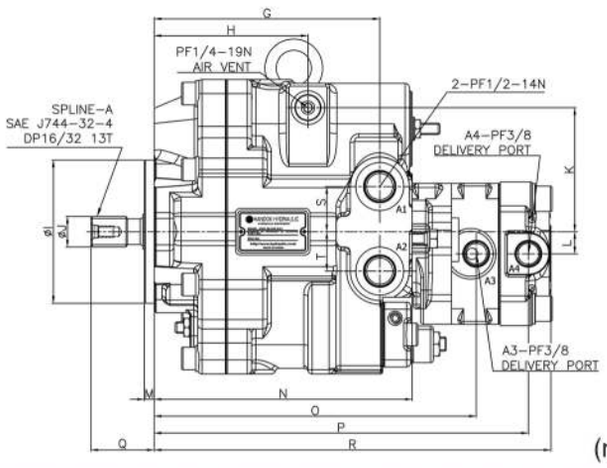

DIMENSIONS

(mm)

MODEL	A	B	C	D	E	F	G	H	I	J	K	L	M	N	O	P	Q	R	S	T
HVD-2B-32/36/38/40/42	140	13	146	174	101	209	160	109	101.6	21.7	88	15.7	7	183	229	266	45	282	32	28

HVD-2B-50 FOR HITACHI
SWASH PLATE TYPE PISTON PUMP

SPECIFICATIONS

MODEL	HVD-2B-50(ZX60-5G)
Discharge Rate(cc/rev)	25 x 2
Max. Pressure (kg/cm²)	230
Max. Speed (rpm)	2,200

Dimensions of Shaft End(Spline Type)

MODEL	No. of teeth	Pitch circle dia(mm)	Module	Pressure angle	Standard
HVD-2B-50 (ZX60-5G)	15	23.813	16/32	30°	SAE



※USABLE CIRCUMSTANCE
50℃, ISO VG46, -20~90℃

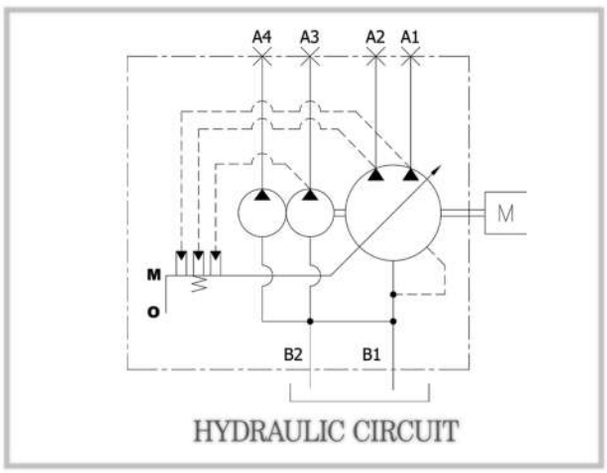

HYDRAULIC CIRCUIT

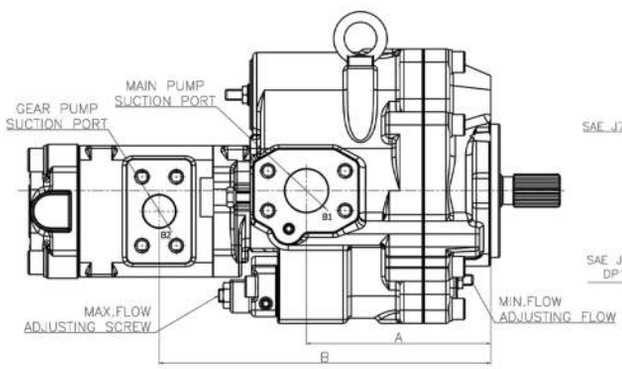

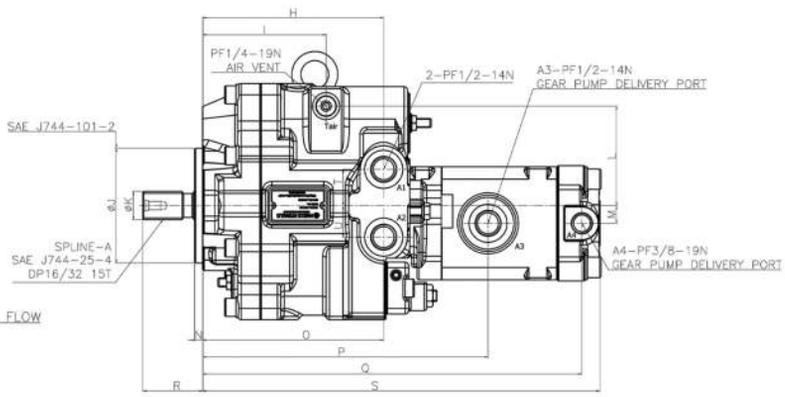

Flange Mounting face for Suction Port

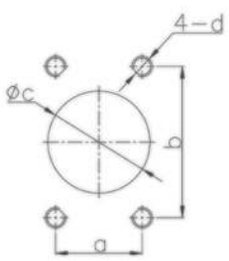

(mm)

	GEAR PUMP	MAIN PUMP
a	26.2	58.7
b	52.4	30.2
c	25 SAE J518-1	33 SAE J518 1 1/4
d	M10x1.5P DP17	M10x1.5P DP17

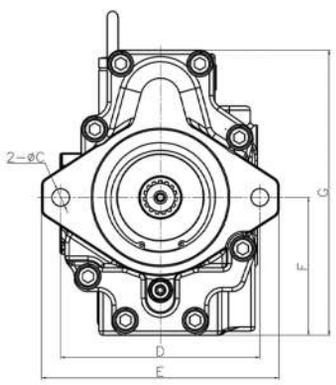

DIMENSIONS

(mm)

MODEL	A	B	C	D	E	F	G	H	I	J	K	L	M	N	O	P	Q	R	S	T	U
HVD-2B-50 (ZX60-5G)	140	253	13	146	174	101	209	160	109	102	25	88	15.7	7	160	253	336	53	352	32	28

HVK-2B-385/505-N(2-STAGE) FOR HITACHI SWASH PLATE TYPE PISTON PUMP

SPECIFICATIONS

MODEL	HVK-2B-385/505-N (2-STAGE)
Discharge Rate(cc/rev)	50
Max. Pressure (kg/cm²)	260
Max. Speed (rpm)	2400

Dimensions of Shaft End(Spline Type)

MODEL	No. of teeth	Pitch circle dia(mm)	Module	Pressure angle	Standard
HVK-2B-385/505-N (2-STAGE)	13	20.64	16/32	30°	SAE J744

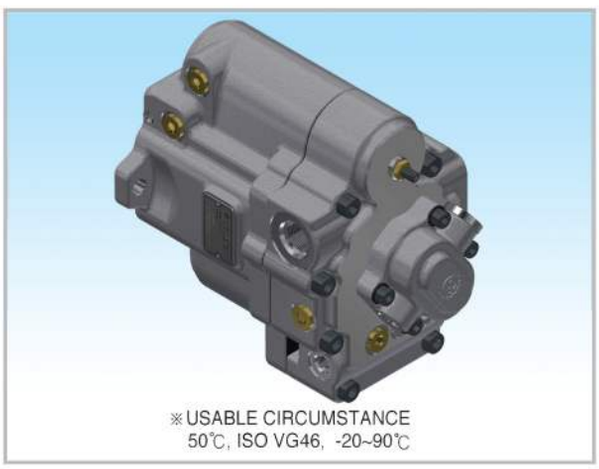

※USABLE CIRCUMSTANCE
50℃, ISO VG46, -20~90℃

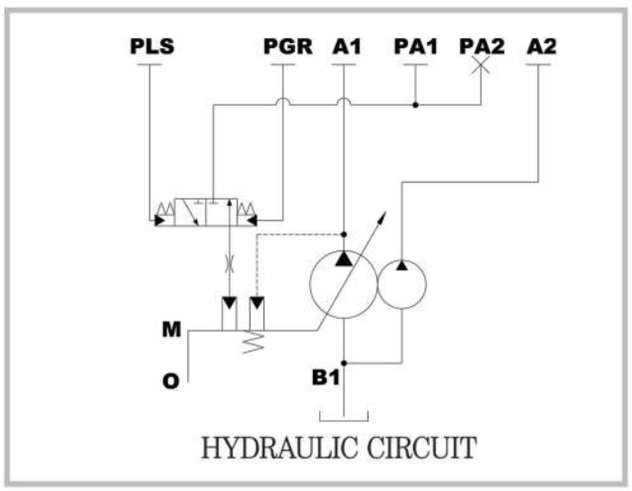

HYDRAULIC CIRCUIT

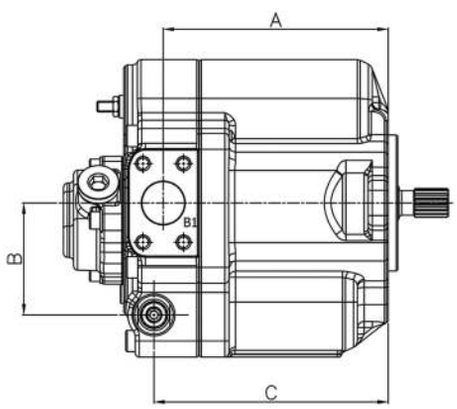

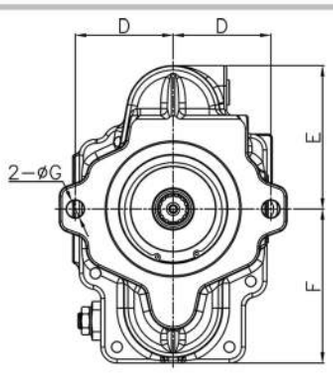

Flange Mounting face for Suction Port

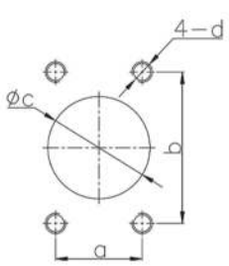

(mm)

a	30.2
b	58.7
c	32 SAE J1518 1 1/4
d	M10x1.5P DP17

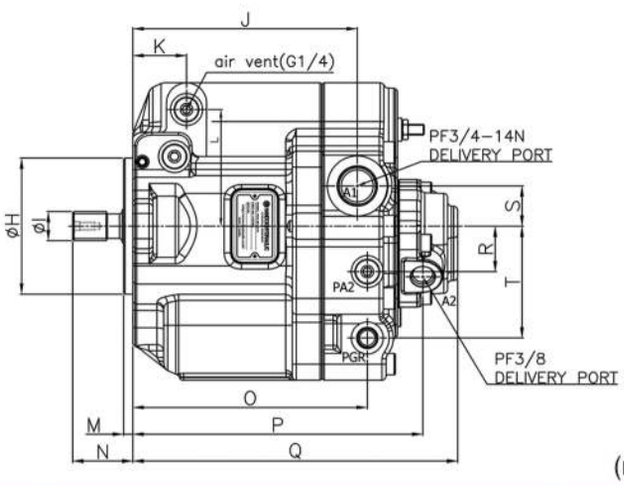

DIMENSIONS

(mm)

MODEL	A	B	C	D	E	F	G	H	I	J	K	L	M	N	O	P	Q	R	S	T
HVK-2B-385/505-N (2-STAGE)	168	83.5	175	73	107	115	13	101.6	21.7	168	40	87	7	45	175	217	243	34	30	83.5

HVK-2B-385/505-CN(3-STAGE)-POWER SHIFT FOR HITACHI SWASH PLATE TYPE PISTON PUMP

SPECIFICATIONS

MODEL	HVK-2B-385/505-CN (POWER SHIFT TYPE)
Discharge Rate(cc/rev)	50
Max. Pressure (kg/cm²)	260
Max. Speed (rpm)	2400

Dimensions of Shaft End(Spline Type)

MODEL	No. of teeth	Pitch circle dia(mm)	Module	Pressure angle	Standard
HVK-2B-385/505-CN (POWER SHIFT TYPE)	13	20.64	16/32	30°	SAE J744

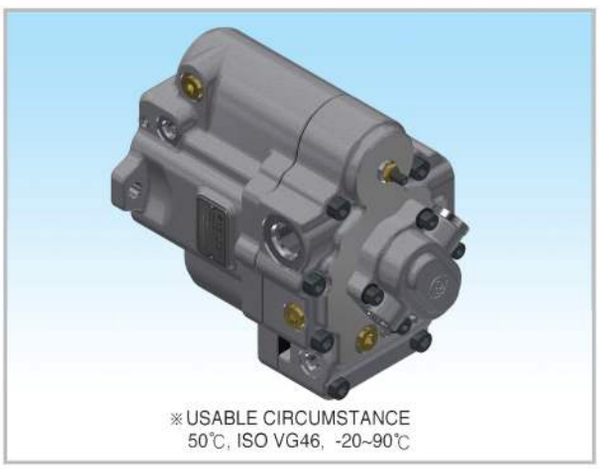

※USABLE CIRCUMSTANCE
50℃, ISO VG46, -20~90℃

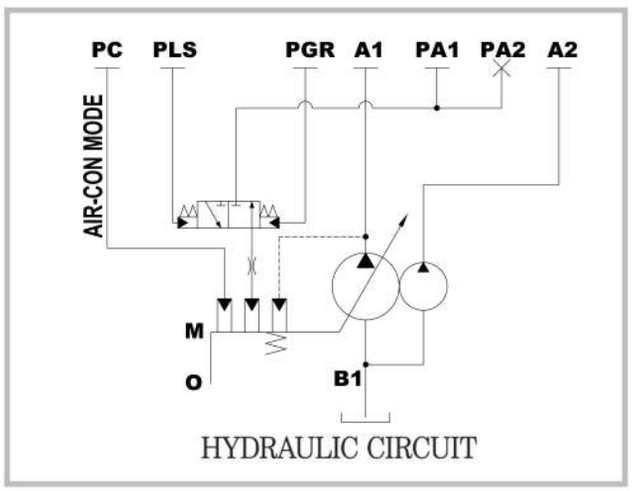

HYDRAULIC CIRCUIT

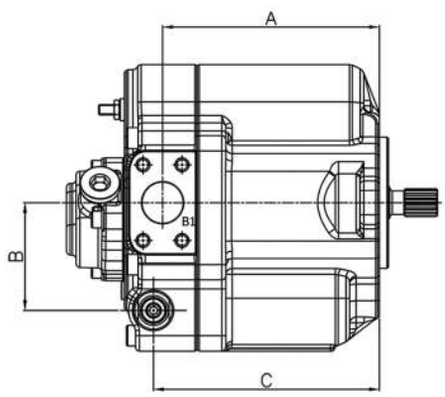

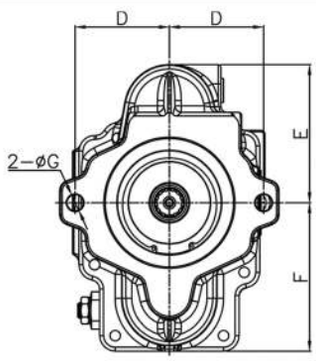

Flange Mounting face for Suction Port

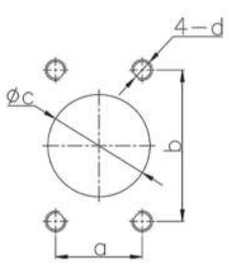

(mm)

a	30.2
b	58.7
c	32 SAE J1518 1 1/4
d	M10x1.5P DP17

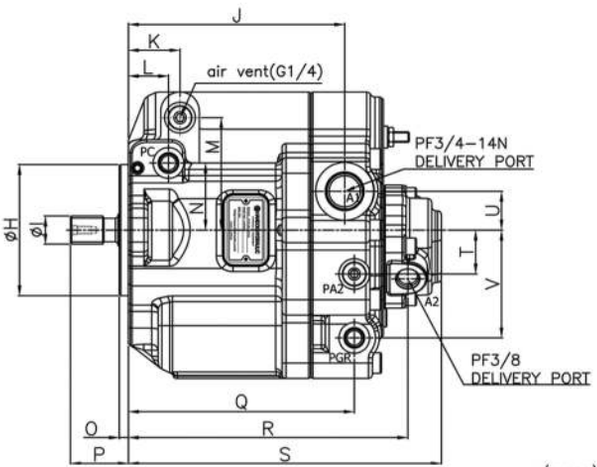

DIMENSIONS

(mm)

MODEL	A	B	C	D	E	F	G	H	I	J	K	L	M	N	O	P	Q	R	S	T	U	V
HVK-2B-385/505-CN (POWER SHIFT TYPE)	168	83.5	175	73	107	115	13	101.6	21.7	168	40	31	87	52	7	45	175	217	243	34	30	83.5

LPD45 FOR KOMATSU
SWASH PLATE TYPE PISTON PUMP

SPECIFICATIONS

MODEL	LPD45 (PC60-8,70UU,70-8,75-3,78,78US-6,88)
Discharge Rate(cc/rev)	43.2
Max. Pressure (kg/cm²)	270
Max. Speed (rpm)	1,850

Dimensions of Shaft End(Spline Type)

MODEL	No of teeth	Pitch circle dia(mm)	Module	Pressure angle	Standard
LPD45 (PC60-8,70UU,70-8, 75-3,78,78US-6,88)	19	31.667	1.667	20°	JIS

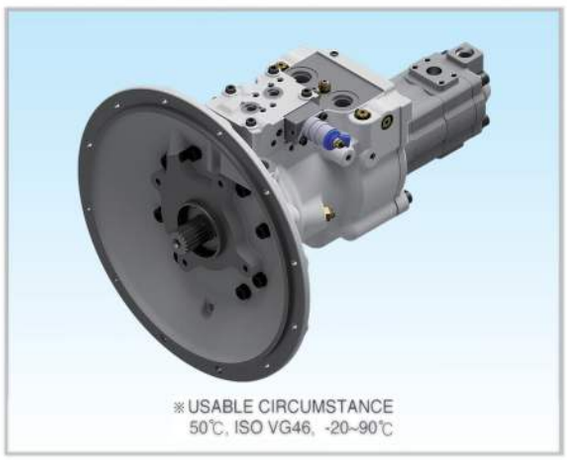

※USABLE CIRCUMSTANCE
50℃, ISO VG46, -20~90℃

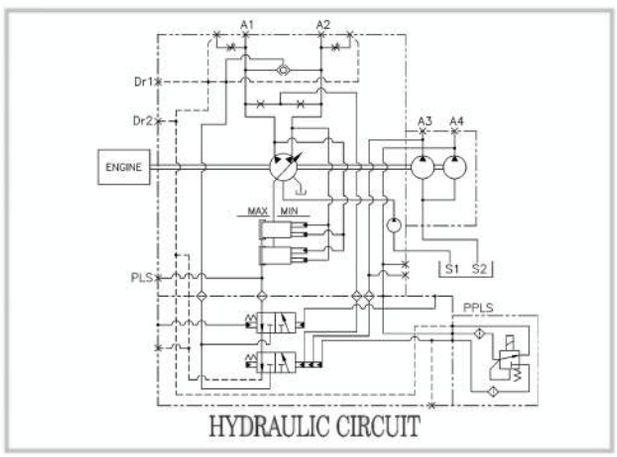

HYDRAULIC CIRCUIT

Flange Mounting face for Suction Port -S1

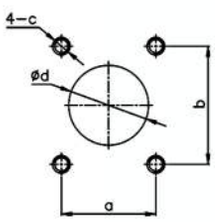

a	72
b	90
c	M12X1.75PXDP24
d	60.8

Flange Mounting face for Delivery Port

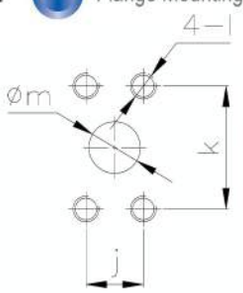

j	22.2
k	47.6
l	M8X1.25PXDP14
m	20

Flange Mounting face for Suction Port -S2

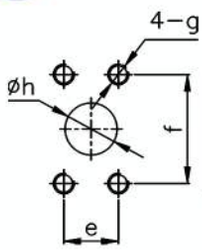

e	26.2
f	52.4
g	M8X1.25PXDP14
h	25

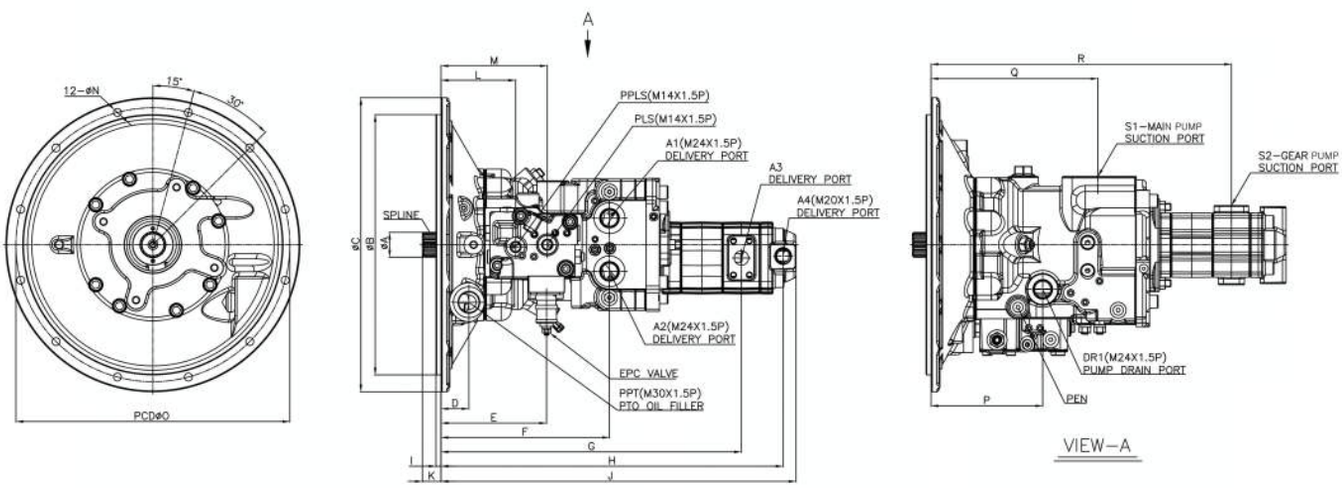

DIMENSIONS

(mm)

MODEL	A	B	C	D	E	F	G	H	I	J	K	L	M	N	O	P	Q	R
LPD45 (PC60-8,70UU,70-8, 75-3,78,78US-6,88)	34.5	361.95	409	38.8	146.8	234.3	417.8	475.8	7	493.8	26	103.8	147.8	11	381	155.3	232	417.8

HPV95A FOR KOMATSU
LOAD SENSING & HORSE POWER CONTROL
SWASH PLATE TYPE PISTON PUMP

SPECIFICATIONS

MODEL	HPV95A (FOR KOMATSU)
Discharge Rate(cc/rev)	95+95
Max. Pressure (kg/cm²)	350
Max. Speed (rpm)	2,000

Dimensions of Shaft End(Spline Type)

MODEL	No. of teeth	Pitch circle dia(mm)	Module	Pressure angle	Standard
HPV95A (FOR KOMATSU)	16	40	2.5	20°	JIS B 1603 :1995

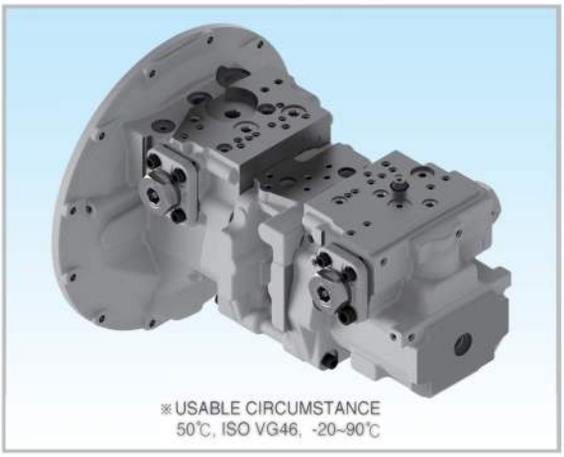

HYDRAULIC CIRCUIT

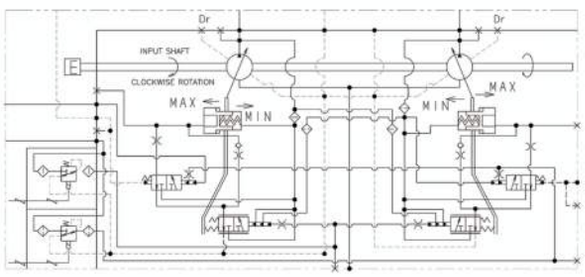

Flange Mounting face for Suction Port

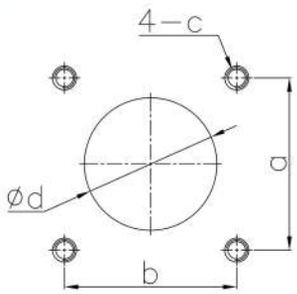

(mm)

a	100
b	100
c	M12X1.75P DP25
d	ø77

Flange Mounting face for Delivery Port

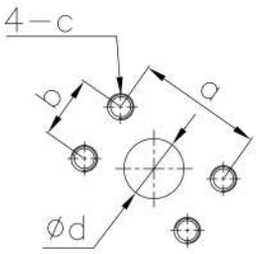

(mm)

a	26.2
b	52.4
c	M10X1.5P DP20
d	ø25

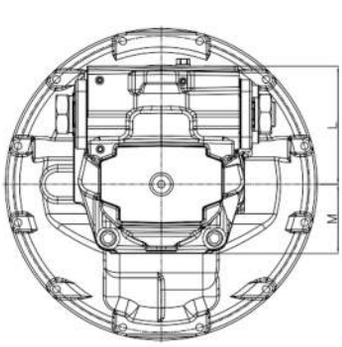

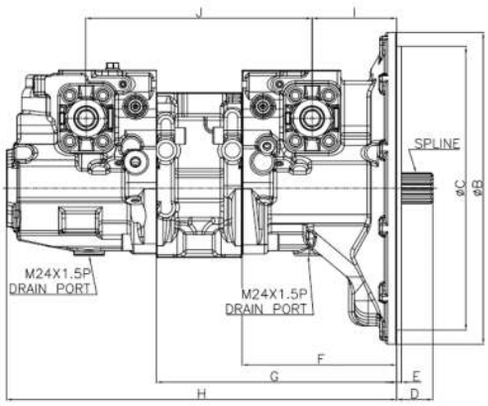

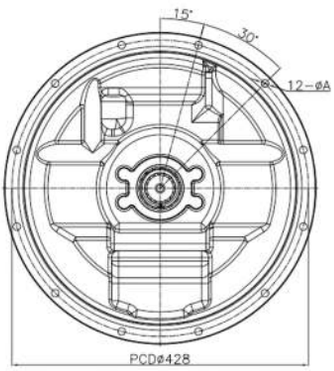

DIMENSIONS

(mm)

MODEL	A	B	C	D	E	F	G	H	I	J	K	L
HPV95A (FOR KOMATSU)	11	450	409.6	52.3	7	223	347	563	122	327	170.5	100

HPV95H FOR KOMATSU
LOAD SENSING & HORSE POWER CONTROL
SWASH PLATE TYPE PISTON PUMP

SPECIFICATIONS

MODEL	HPV95H (FOR KOMATSU)
Discharge Rate(cc/rev)	95+95
Max. Pressure (kg/cm²)	350
Max. Speed (rpm)	2,000

Dimensions of Shaft End(Spline Type)

MODEL	No. of teeth	Pitch circle dia(mm)	Module	Pressure angle	Standard
HPV95H (FOR KOMATSU)	16	40	2.5	20°	JIS B 1603 :1995

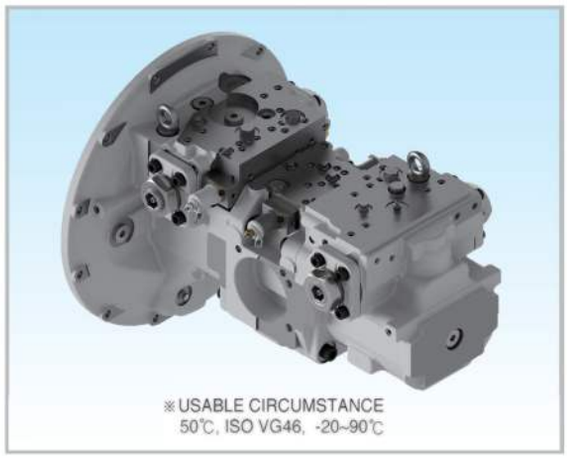

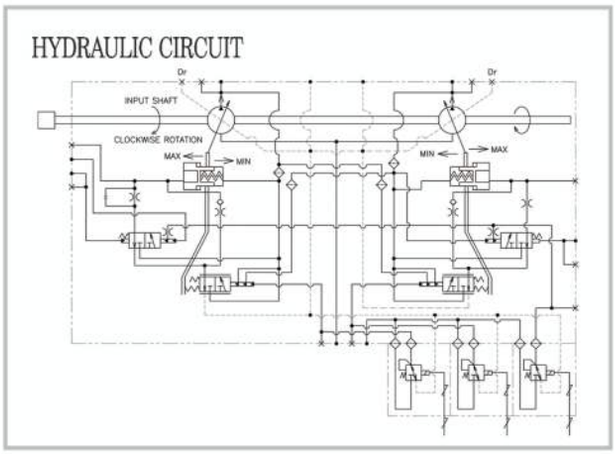

Flange Mounting face for Suction Port

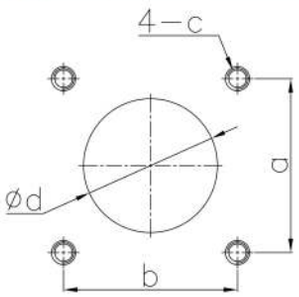

(mm)

a	100
b	100
c	M12X1.75P DP25
d	ø77

Flange Mounting face for Delivery Port

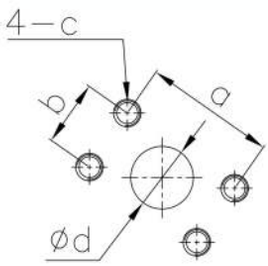

(mm)

a	26.2
b	52.4
c	M10X1.5P DP20
d	ø25

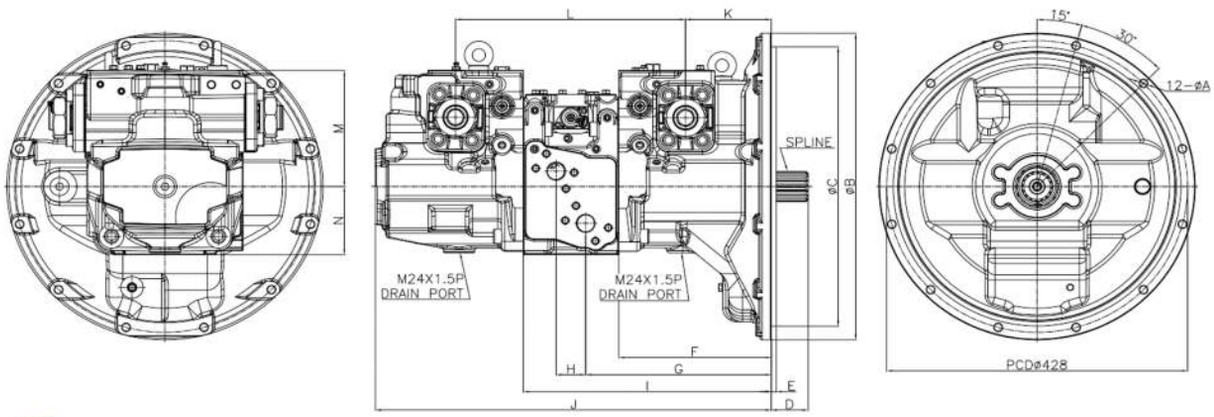

DIMENSIONS

(mm)

MODEL	A	B	C	D	E	F	G	H	I	J	K	L	M	N
HPV95H (FOR KOMATSU)	11	450	409.69	52.3	7	217	264	42	353	563	122	327	170.5	100

H2FO10/12/16
BENT AXIS TYPE AXIAL PISTON PUMPS

SPECIFICATIONS

MODEL	H2FO10	H2FO12	H2FO16
Discharge Rate (cc/rev)	10	12	16
Max. Pressure (kg/cm^2)	400		
Max. Speed (rpm)	3150		



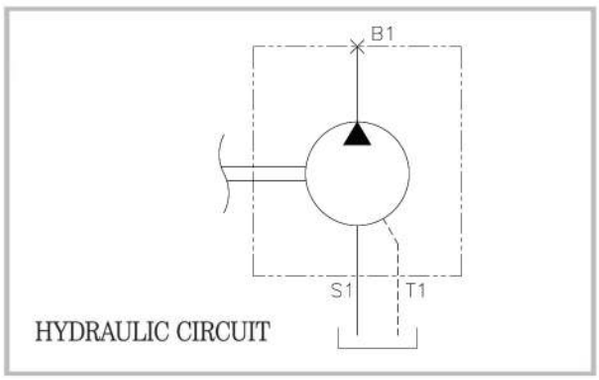

Dimensions of Shaft End (Spline Type)

MODEL	No. of teeth	Pitch Circle Dia(mm)	Moudle	Pressure Angle	Standard
H2FO10/12/16	18	22.5	1.25	30	DIN 5480
H2FO10/12	14	17.5	1.25	30	DIN 5480

Dimensions of Shaft End (Key Type)

MODEL	a	b	c	d	e	f	Standard
H2FO10/12	20	22.5	39	40	32	6	DIN 6885
H2FO10/12/16	25	28	39	40	32	8	DIN 6885

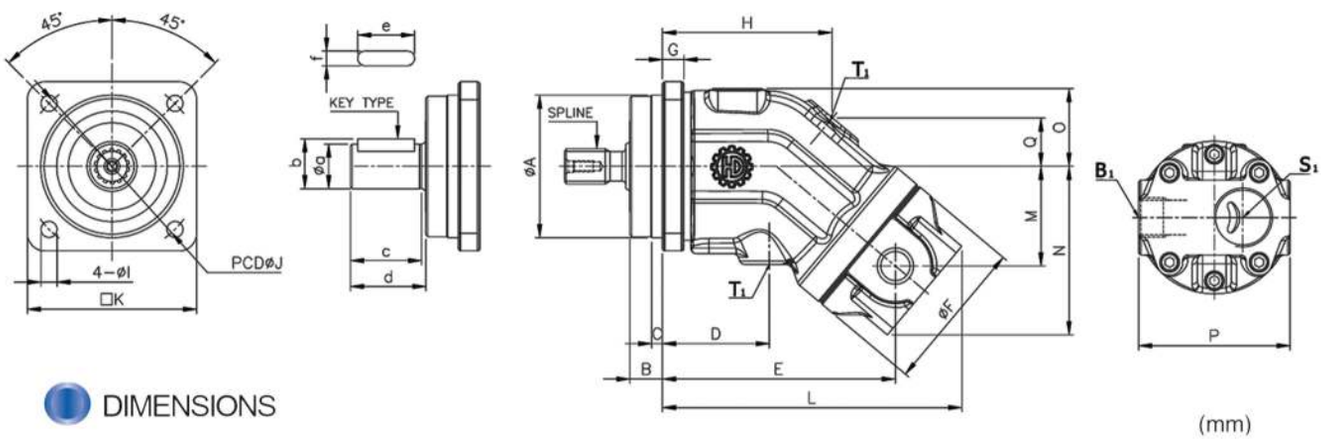

DIMENSIONS

(mm)

MODEL	A	B	C	D	E	F	G	H	I	J	K	L	M	N	O	P	Q	T1	B1	S1
H2FO10/12/16	80	18.2	6	60	131	85	12	95	9	100	95	168	56	95	44	140	29	M12X1.5	M22X1.5	M33X2.0

H2FO23/28/32
BENT AXIS TYPE AXIAL PISTON PUMPS

SPECIFICATIONS

MODEL	H2FO23	H2FO28	H2FO32
Discharge Rate (cc/rev)	23	28	32
Max. Pressure (kg/cm^2)	400		
Max. Speed (rpm)	2500		



※USABLE CIRCUMSTANCE
50℃, ISO VG46, -20~90℃

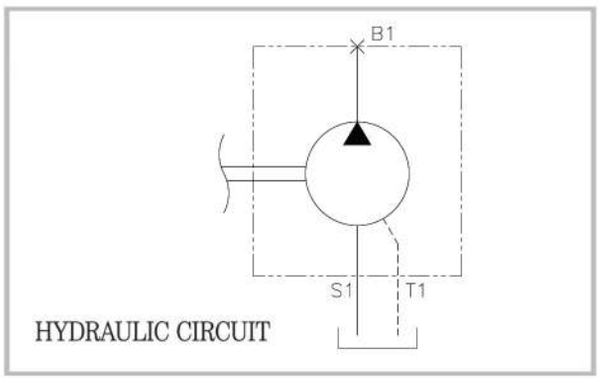

HYDRAULIC CIRCUIT

Dimensions of Shaft End (Spline Type)

MODEL	No. of teeth	Pitch Circle Dia(mm)	Moudle	Pressure Angle	Standard
H2FO23/28/32	14	28	2	30	DIN 5480
H2FO23/28	18	22.5	1.25	30	DIN 5480

Dimensions of Shaft End (Key Type)

MODEL	a	b	c	d	e	f	Standard
H2FO23/28	25	28	49	50	40	8	DIN 6885
H2FO23/28/32	30	33	49	50	40	8	DIN 6885

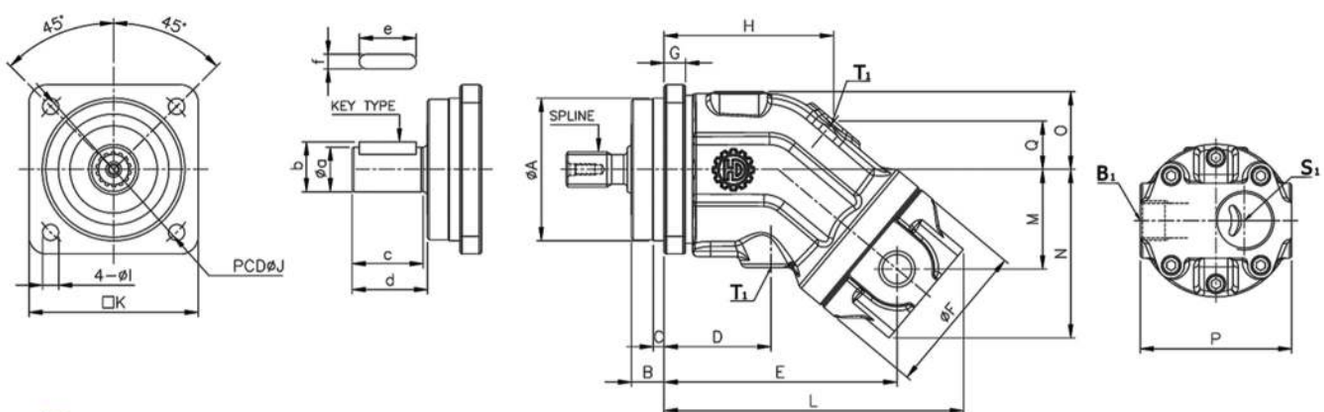

DIMENSIONS

(mm)

MODEL	A	B	C	D	E	F	G	H	I	J	K	L	M	N	O	P	Q	T1	B1	S1
H2FO23/28/32	100	23.2	8	42	144	106	18	106	11	125	118	193	70	120	55	120	25	M16X1.5	M27X2.0P	M42X2.0P

HPV116/145 FOR HITACHI / JOHN DEERE
BENT AXIS TYPE AXIAL PISTON PUMPS



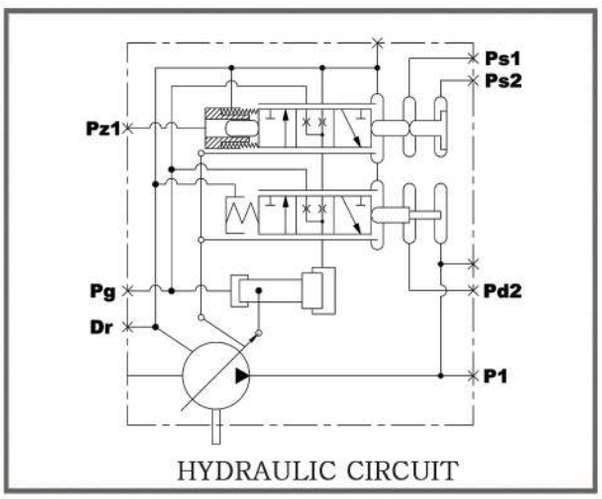

HYDRAULIC CIRCUIT

SPECIFICATION

MODEL	HPV116	HPV145
Discharge Rate (cc/rev)	116	145
Max. Pressure (kg/cm²)	350	
Max. Speed (rpm)	2000	

※USABLE CIRCUMSTANCE
50℃, ISO VG46, -20~90℃

Dimensions of Shaft End(Spline Type)

MODEL	No.of teeth	Pitch circle dia(mm)	Module	Pressure angle	Standard
HPV116 HPV145	15	47.6	DP8/16	30 °	ANSI B92.1b :1970

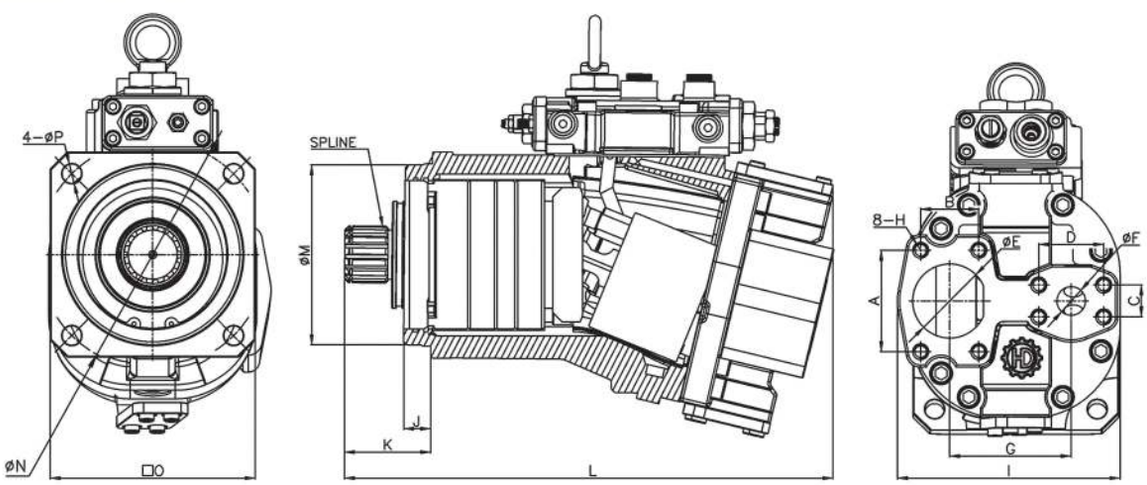

Flange Mounting face for Suction & Delivery port

(mm)

MODEL	A	B	C	D	E	F	G	H
HPV116	89	51	28	57	65	25	107	M12X1.75P Dp30
HPV145					64	26	114.5	M12X1.75P Dp25

DIMENSIONS

(mm)

MODEL	I	J	K	L	M	N	O	P
HPV116	197.7	24	73.6	432	160	ø200.8	180	17
HPV145	208	21	75.5	458.5	184	ø220.6	200	

HPVO102 FOR HITACHI / JOHN DEERE
BENT AXIS TYPE AXIAL PISTON PUMP

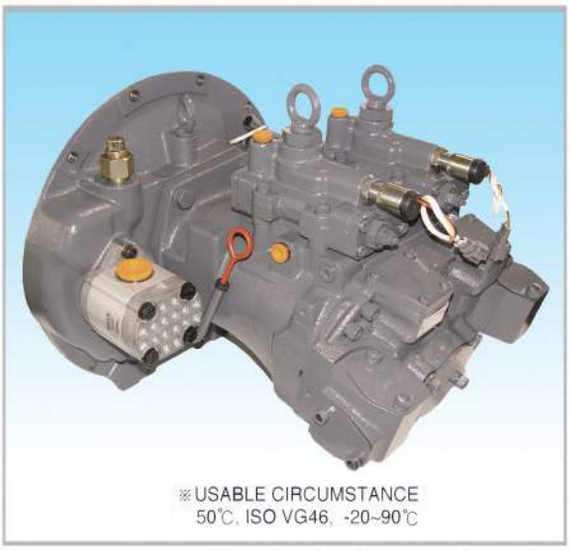

SPECIFICATIONS

MODEL	HPVO102
Discharge Rate (cc/rev)	102
Max. Pressure (kg/cm²)	350
Max. Speed (rpm)	2000

Dimensions of Shaft End(Spline Type)

MODEL	No.of teeth	Pitch circle dia(mm)	Module	Pressure angle	Standard
HPVO102	15	37.5	2.5	20°	JIS B 1603 :1995

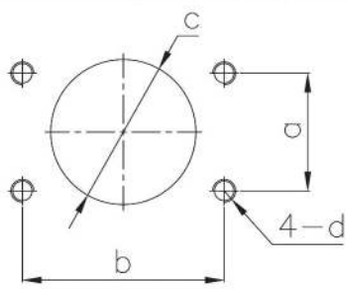

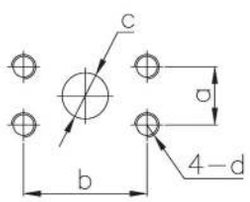

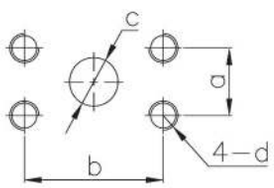

Flange Mounting face for Suction Port

(mm)

MODEL	a	b	c	d
HPVO 102	62	106.4	Ø76.5	M12X1.75P

Flange Mounting face for Delivery Port-A

(mm)

MODEL	a	b	c	d
HPVO 102	24	50.8	Ø19	M10X1.5P

Flange Mounting face for Delivery Port-B

(mm)

MODEL	a	b	c	d
HPVO 102	27.8	57.2	Ø20	M12X1.75P

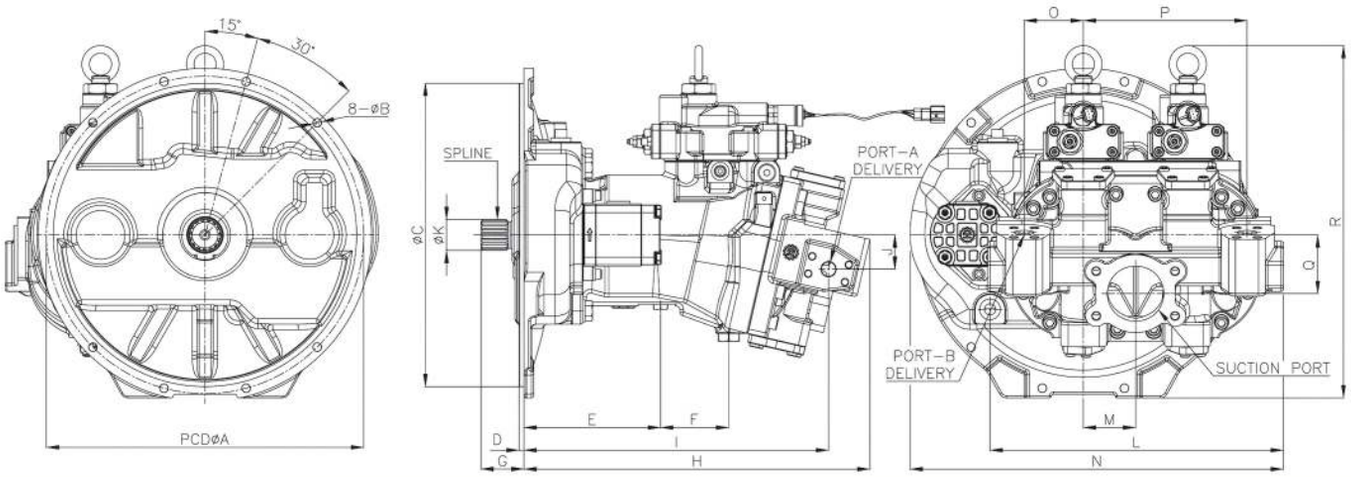

DIMENSIONS

(mm)

MODEL	A	B	C	D	E	F	G	H	I	J	K	L	M	N	O	P	Q	R
HPVO102	428.5	11.3	409.6	6.5	184.5	92	58	467	411.3	46.3	42	396.5	70.6	504	80	221	79.3	477

HPVO118 FOR HITACHI / JOHN DEERE
BENT AXIS TYPE AXIAL PISTON PUMP

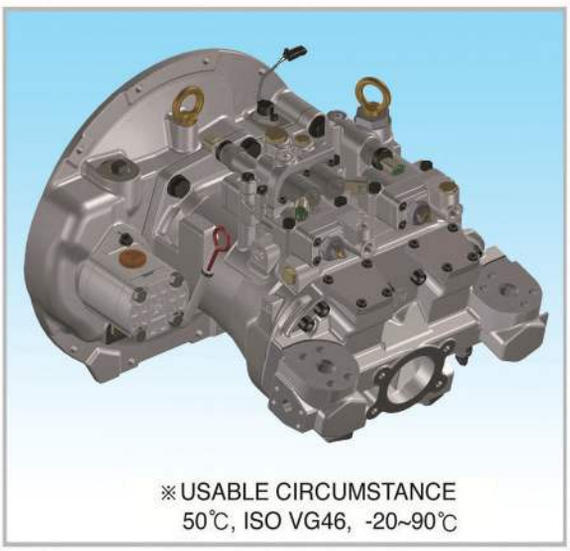

※USABLE CIRCUMSTANCE
50℃, ISO VG46, -20~90℃

SPECIFICATIONS

MODEL	HPVO118
Discharge Rate (cc/rev)	118
Max. Pressure (kg/cm²)	350
Max. Speed (rpm)	2000

Dimensions of Shaft End(Spline Type)

MODEL	No.of teeth	Pitch circle dia(mm)	Module	Pressure angle	Standard
HPVO118	15	37.5	2.5	20°	JIS B 1603 :1995

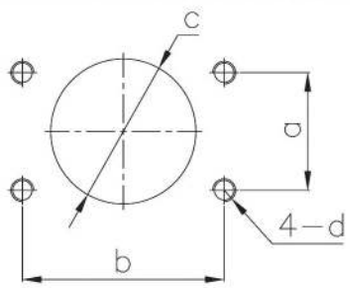

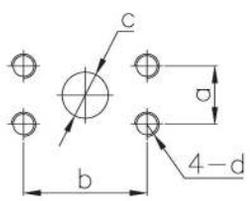

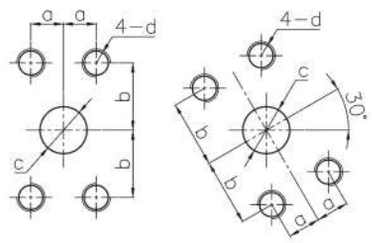

Flange Mounting face for Suction Port

(mm)

MODEL	a	b	c	d
HPVO118	62	106.4	Ø76.5	M12X1.75P

Flange Mounting face for Delivery Port-A

(mm)

MODEL	a	b	c	d
HPVO118	24	50.8	Ø19	M10X1.5P

Flange Mounting face for Delivery Port-B&C

(mm)

MODEL	a	b	c	d
HPVO118	27.8	57.2	Ø20	M12X1.75P

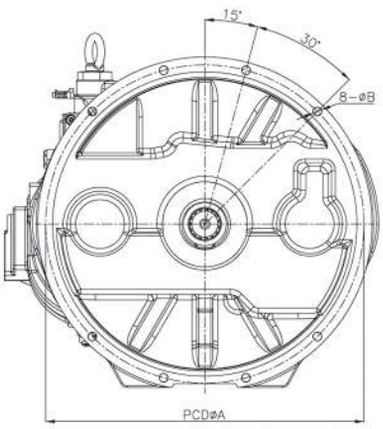

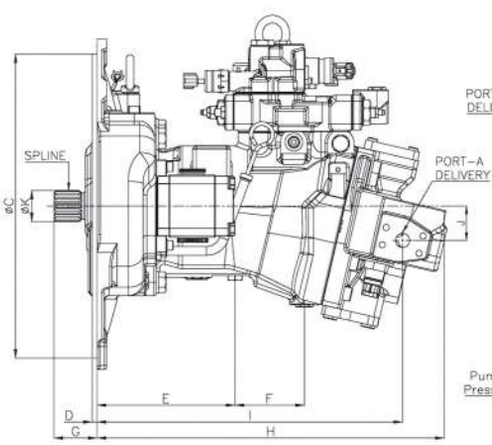

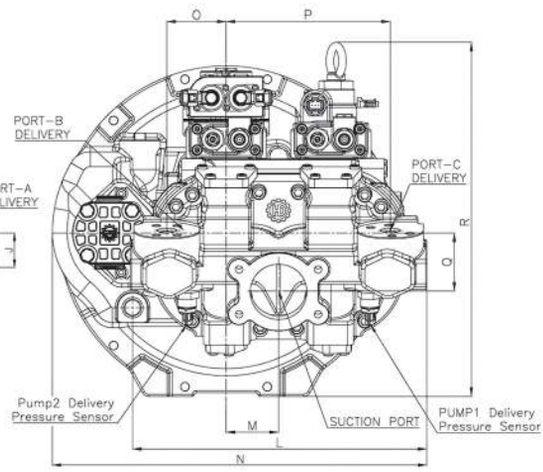

DIMENSIONS

(mm)

MODEL	A	B	C	D	E	F	G	H	I	J	K	L	M	N	O	P	Q	R
HPVO118	428.5	11.3	409.6	6.5	184.5	92	58	467	411.3	46.3	42	396.5	70.6	504	80	221	79.3	477

H6VM55/80/107/160/200/250 - FOR HD TYPE BENT AXIS TYPE AXIAL PISTON MOTORS

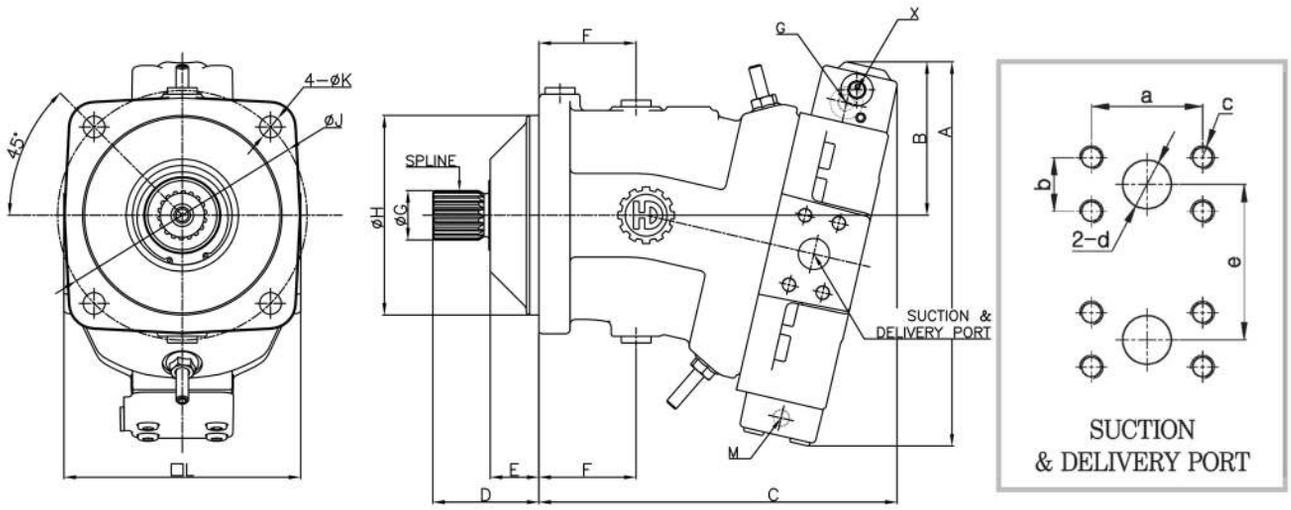

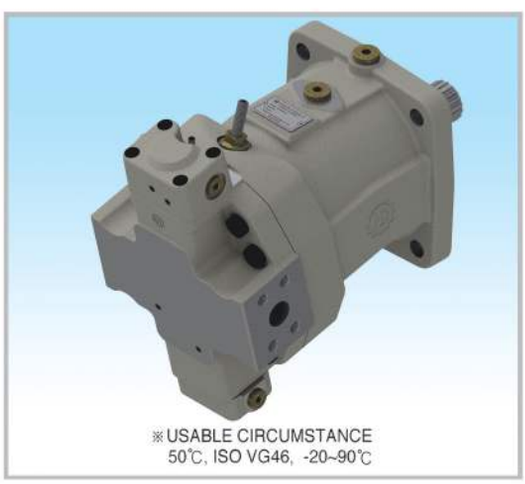

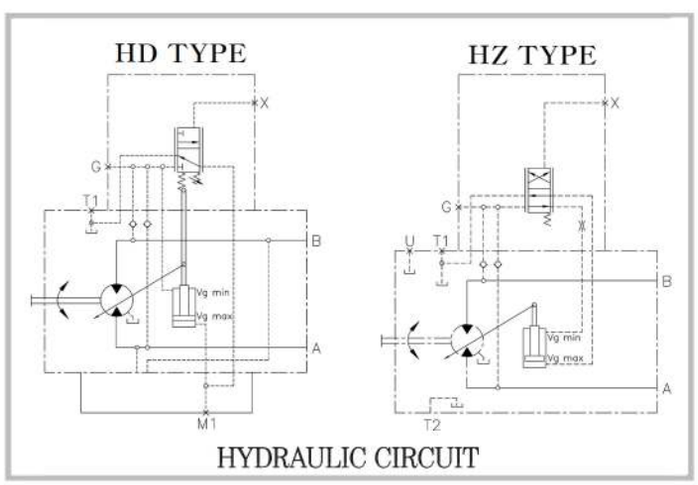

Flange Mounting face for Suction & Delivery Port

(mm)

MODEL	a	b	c	d	e
H6VM55	50.8	23.8	M10x1.5P Dp20	19	108
H6VM80	57.2	27.8	M12x1.75P Dp20	25	108
H6VM107	57.2	27.8	M12x1.75P Dp20	25	130
H6VM160	66.7	31.8	M14x2.0P Dp20	32	152
H6VM200	66.7	31.8	M14x2.0P Dp20	32	164
H6VM250	66.7	31.8	M14x2.0P Dp20	32	112

SPECIFICATIONS

MODEL	DISPLACEMENT (cc/rev)		MAX PRESSURE (Kg/cm²)	TORQUE (Nm)	R.P.M		FLOW MAX (L/min)
	MAX	MIN			MAX	MIN	
H6VM55	55	35	350	349	4450	7000	244
H6VM80	80	51		509	3900	6150	312
H6VM107	107	68		681	3500	5600	380
H6VM160	160	101		1019	3100	4900	496
H6VM200	200	126		1273	2900	4600	580
H6VM250	250	188		1391	2700	3600	675

Dimensions of Shaft End(Spline Type)

MODEL	No.of teeth	Pitch circle dia(mm)	Module	Pressure angle
H6VM55	14	28	2.0	30°
H6VM80	16	32	2.0	30°
H6VM107	18	36	2.0	30°
H6VM160	24	48	2.0	30°
H6VM200	24	48	2.0	30°
H6VM250	24	48	2.0	30°

DIMENSIONS

(mm)

MODEL	A	B	C	D	E	F	G	H	J	K	L
H6VM55	262	111	238	67	31	67	30	125	160	13.5	150
H6VM80	283	116	269	72	31	76	35	140	180	13.5	165
H6VM107	304	123	289	85	39	78	40	160	200	17.5	190
H6VM160	331	129	328	95	39	92.5	50	180	224	17.5	210
H6VM200	352	143	345	95	39	96	50	200	250	22	236
H6VM250	449	189	383	108	48	82	50	200	250	22	236

H6VM55/80/107/160/200/250 - FOR EP TYPE BENT AXIS TYPE AXIAL PISTON MOTORS

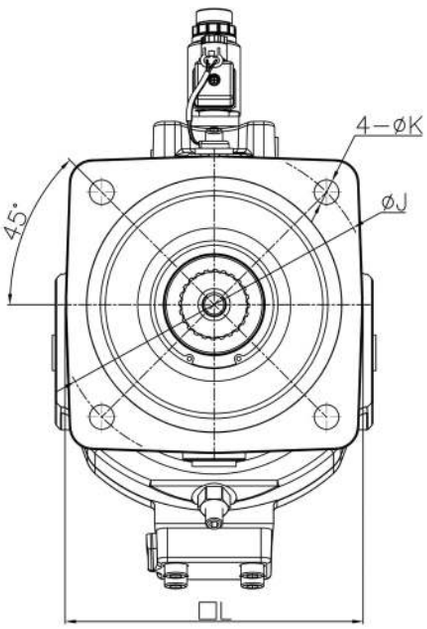

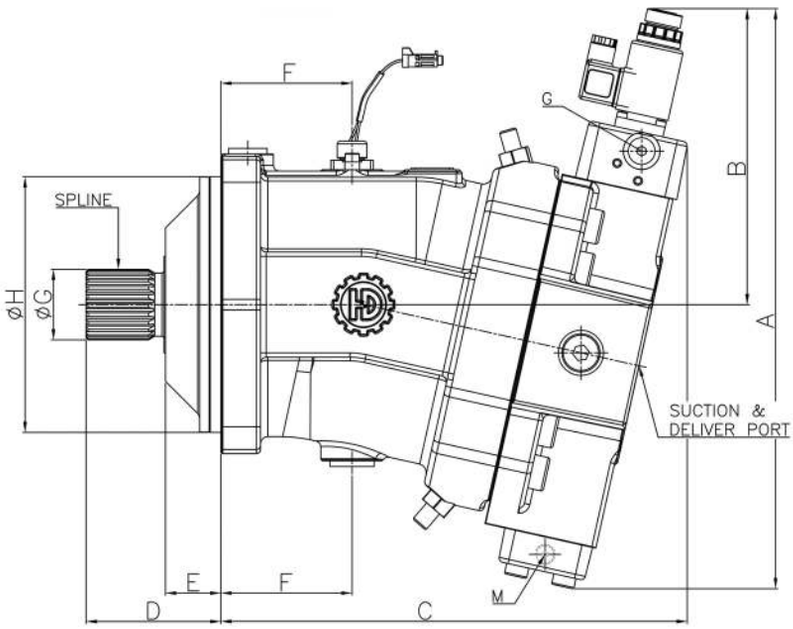

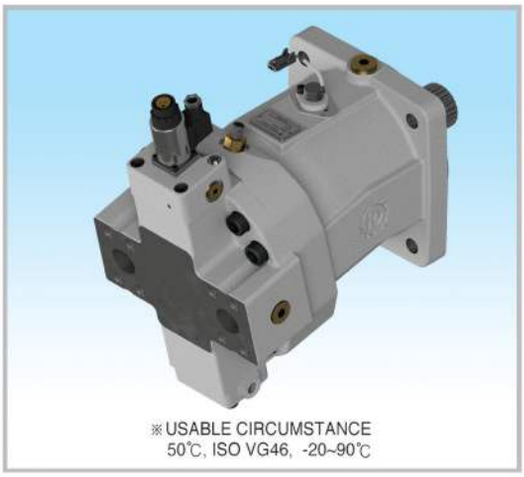

※USABLE CIRCUMSTANCE
50℃, ISO VG46, -20~90℃

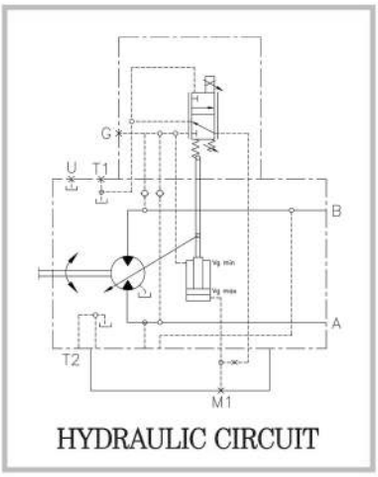

HYDRAULIC CIRCUIT

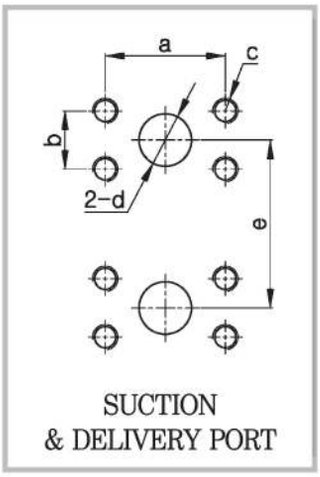

SUCTION
& DELIVERY PORT

Flange Mounting face for Suction & Delivery Port

(mm)

MODEL	a	b	c	d	e
H6VM55	50.8	23.8	M10x1.5P Dp20	19	108
H6VM80	57.2	27.8	M12x1.75P Dp20	25	108
H6VM107	57.2	27.8	M12x1.75P Dp20	25	130
H6VM160	66.7	31.8	M14x2.0P Dp20	32	152
H6VM200	66.7	31.8	M14x2.0P Dp20	32	164
H6VM250	66.7	31.8	M14x2.0P Dp20	32	112

Dimensions of Shaft End(Spline Type)

MODEL	No.of teeth	Pitch circle dia(mm)	Module	Pressure angle
H6VM55	14	28	2.0	30°
H6VM80	16	32	2.0	30°
H6VM107	18	36	2.0	30°
H6VM160	24	48	2.0	30°
H6VM200	24	48	2.0	30°
H6VM250	24	48	2.0	30°

SPECIFICATIONS

MODEL	DISPLACEMENT (cc/rev)		MAX PRESSURE (Kg/cm²)	TORQUE (Nm)	R.P.M		FLOW MAX (L/min)
	MAX	MIN			MAX	MIN	
H6VM55	55	35	350	349	7000	4450	244
H6VM80	80	51		509	6150	3900	312
H6VM107	107	68		681	5600	3500	380
H6VM160	160	101		1019	4900	3100	496
H6VM200	200	126		1273	4600	2900	580
H6VM250	250	188		1391	3600	2700	675

DIMENSIONS

(mm)

MODEL	A	B	C	D	E	F	G	H	J	K	L
H6VM55	327	176	243	67	31	67	30	125	160	13.5	150
H6VM80	349	182	271	72	31	76	35	140	180	13.5	165
H6VM107	362	187	287	85	39	78	40	160	200	17.5	190
H6VM160	408	195	328	95	39	92.5	50	180	224	17.5	210
H6VM200	408	199	346	95	39	96	50	200	250	22	236
H6VM250	436	188	383	108	48	82	50	200	250	22	236

H6VM55/80/107/160/200/250 - FOR EZ TYPE BENT AXIS TYPE AXIAL PISTON MOTORS

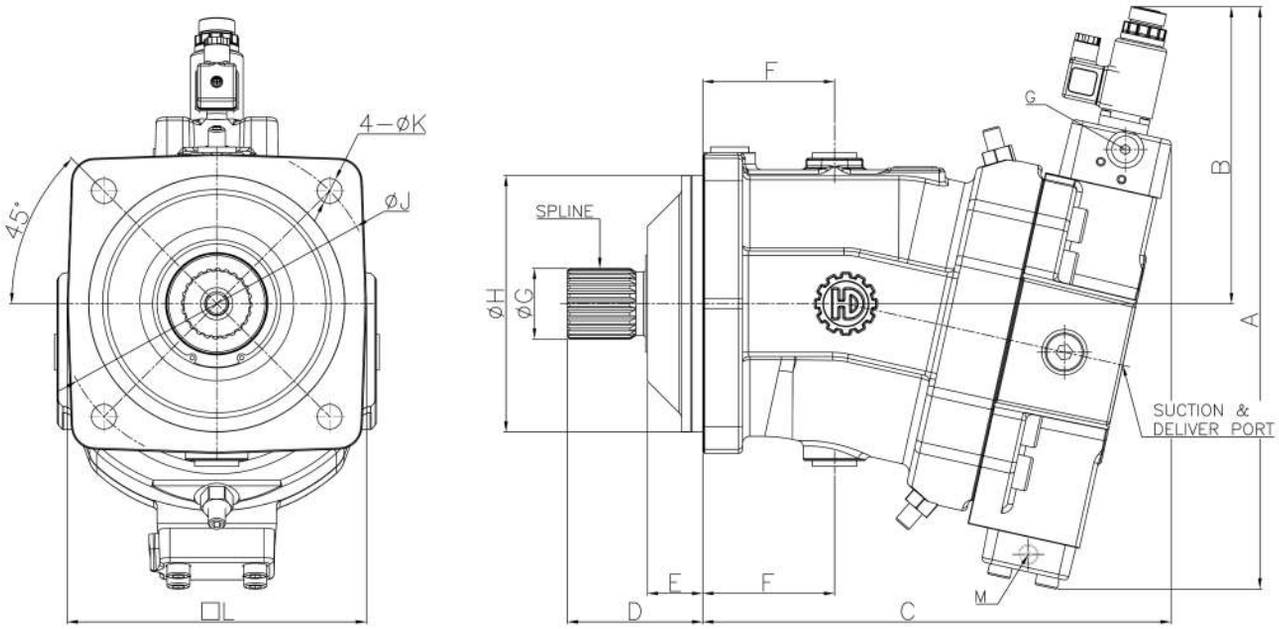

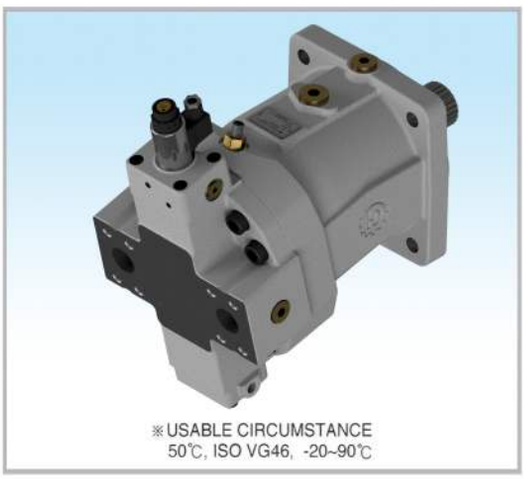

※USABLE CIRCUMSTANCE
50℃, ISO VG46, -20~90℃

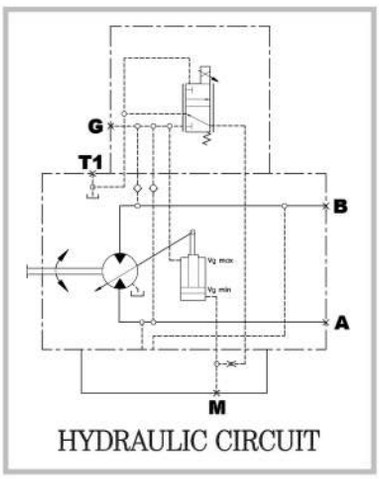

HYDRAULIC CIRCUIT

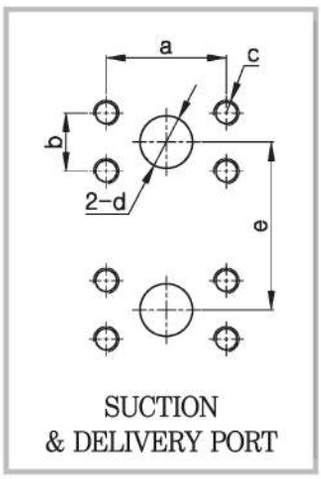

SUCTION
& DELIVERY PORT

Flange Mounting face for Suction & Delivery Port

(mm)

MODEL	a	b	c	d	e
H6VM55	50.8	23.8	M10x1.5P Dp20	19	75
H6VM80	57.2	27.8	M12x1.75P Dp20	25	84
H6VM107	57.2	27.8	M12x1.75P Dp20	25	84
H6VM160	66.7	31.8	M14x2.0P Dp20	32	152
H6VM200	66.7	31.8	M14x2.0P Dp20	32	164
H6VM250	66.7	31.8	M14x2.0P Dp20	32	112

Dimensions of Shaft End(Spline Type)

MODEL	No.of teeth	Pitch circle dia(mm)	Module	Pressure angle
H6VM55	14	28	2.0	30°
H6VM80	16	32	2.0	30°
H6VM107	18	36	2.0	30°
H6VM160	24	48	2.0	30°
H6VM200	24	48	2.0	30°
H6VM250	24	48	2.0	30°

SPECIFICATIONS

MODEL	DISPLACEMENT (cc/rev)		MAX PRESSURE (Kg/cm²)	TORQUE (Nm)	R.P.M		FLOW MAX (L/min)
	MAX	MIN			MAX	MIN	
H6VM55	55	35	350	349	7000	4450	244
H6VM80	80	51		509	6150	3900	312
H6VM107	107	68		681	5600	3500	380
H6VM160	160	101		1019	4900	3100	496
H6VM200	200	126		1273	4600	2900	580
H6VM250	250	188		1391	3600	2700	675

DIMENSIONS

(mm)

MODEL	A	B	C	D	E	F	G	H	J	K	L
H6VM55	327	176	243	67	31	67	30	125	160	13.5	150
H6VM80	349	182	271	72	31	76	35	140	180	13.5	165
H6VM107	362	187	287	85	39	78	40	160	200	17.5	190
H6VM160	408	195	328	95	39	92.5	50	180	224	17.5	210
H6VM200	408	199	346	95	39	96	50	200	250	22	236
H6VM250	436	188	383	108	48	82	50	200	250	22	236

H6VM55/80/107/160/200/250 FOR HJ TYPE BENT AXIS TYPE AXIAL PISTON MOTORS

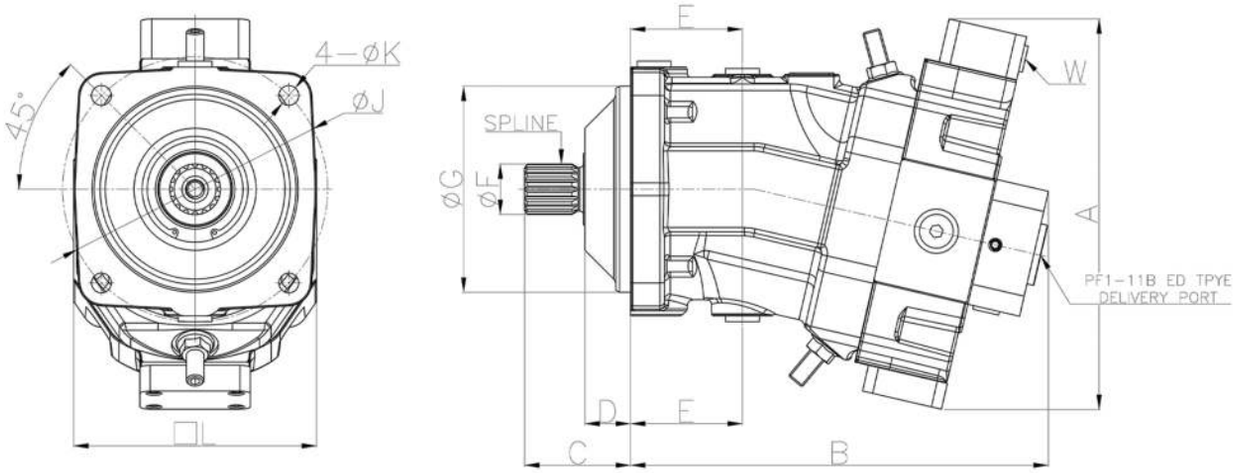

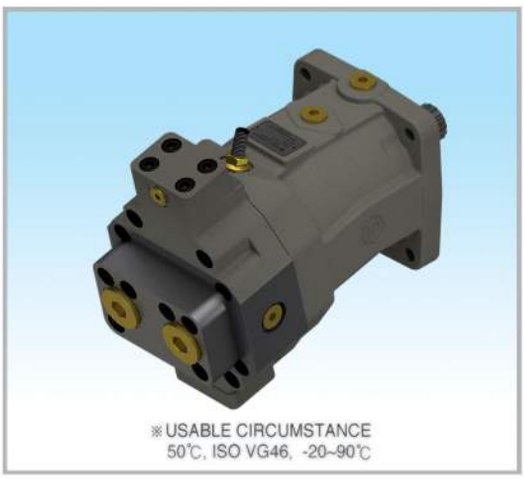

※USABLE CIRCUMSTANCE
50℃, ISO VG46, -20~90℃

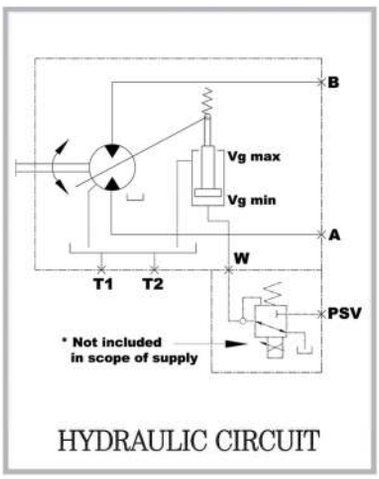

HYDRAULIC CIRCUIT

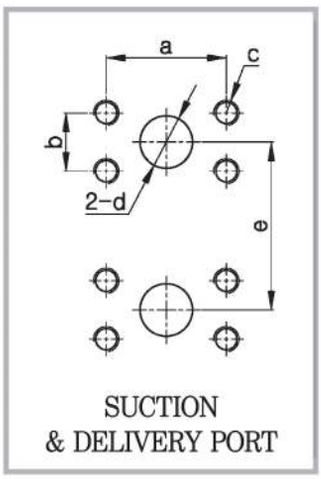

SUCTION
& DELIVERY PORT

Flange Mounting face for Suction & Delivery Port

(mm)

MODEL	a	b	c	d	e
H6VM55	50.8	23.8	M10x1.5P Dp20	19	108
H6VM80	57.2	27.8	M12x1.75P Dp20	25	108
H6VM107	57.2	27.8	M12x1.75P Dp20	25	130
H6VM160	66.7	31.8	M14x2.0P Dp20	32	152
H6VM200	66.7	31.8	M14x2.0P Dp20	32	164
H6VM250	66.7	31.8	M14x2.0P Dp20	32	112

Dimensions of Shaft End(Spline Type)

MODEL	No.of teeth	Pitch circle dia(mm)	Module	Pressure angle
H6VM55	14	28	2.0	30°
H6VM80	16	35	2.0	30°
H6VM107	18	40	2.0	30°
H6VM160	21	45	2.0	30°
H6VM200	24	48	2.0	30°
H6VM250	24	48	2.0	30°

SPECIFICATIONS

MODEL	DISPLACEMENT (cc/rev)		NORMAL PRESSURE (Kg/cm²)	TORQUE (Nm)	R.P.M		FLOW MAX (L/min)
	MAX	MIN			MAX	MIN	
H6VM55	55	35	350	349	4450	7000	244
H6VM80	80	51		509	3900	6150	312
H6VM107	107	68		681	3500	5600	380
H6VM160	160	101		1019	3100	4900	496
H6VM200	200	126		1273	2900	4600	580
H6VM250	250	188		1391	2700	3600	675

DIMENSIONS

(mm)

MODEL	A	B	C	D	E	F	G	H	J	K	L
H6VM55	262	256	71	31	16	67	35	125	160	13.5	150
H6VM80	265	283	72	31	16	76	35	140	180	13.5	165
H6VM107	280	302	85	39	17	78	40	160	200	17.5	190
H6VM160	303	334	95	39	19	93	45	180	224	17.5	210
H6VM200	352	361	95	39	19	96	50	200	250	17.5	236
H6VM250	449	399	108	48	22	82	50	200	245	17.5	236

H6VM55/80/107/160/200/250
BENT AXIS TYPE AXIAL PISTON MOTORS

CONNECT ROD TYPE

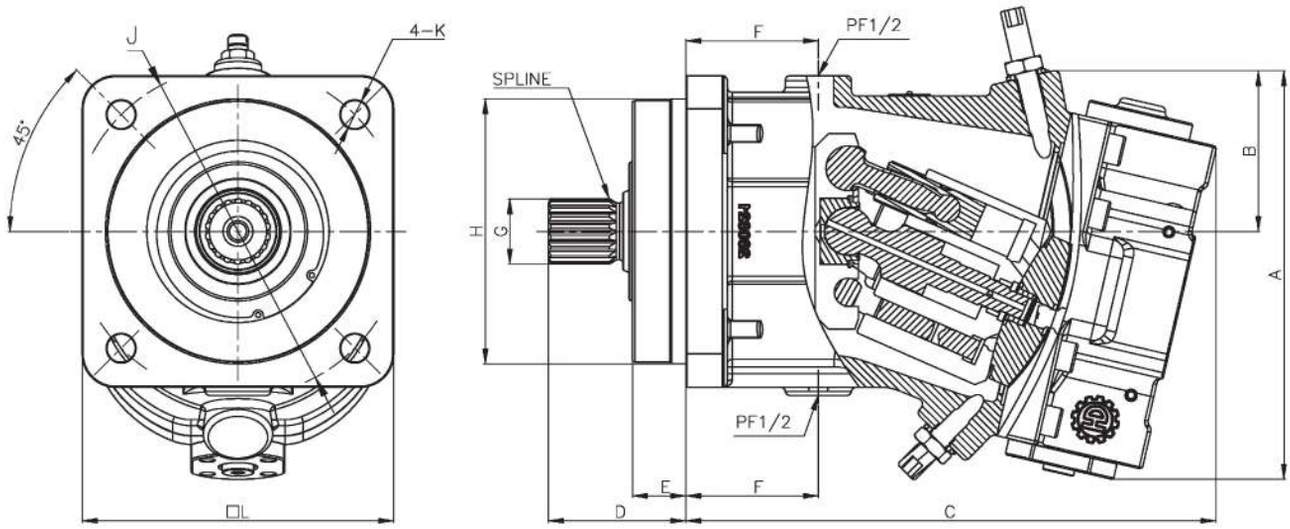



※USABLE CIRCUMSTANCE
50℃, ISO VG46, -20~90℃

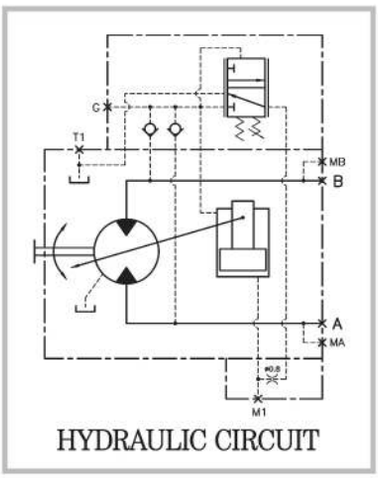

HYDRAULIC CIRCUIT

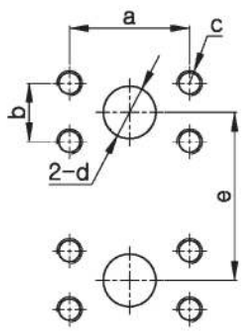

SUCTION
& DELIVERY PORT

Flange Mounting face for Suction & Delivery Port

(mm)

MODEL	a	b	c	d	e
H6VM55	50.8	23.8	M10x1.5P Dp20	19	108
H6VM80	57.2	27.8	M12x1.75P Dp20	25	108
H6VM107	57.2	27.8	M12x1.75P Dp20	25	130
H6VM160	66.7	31.8	M14x2.0P Dp20	32	152
H6VM200	66.7	31.8	M14x2.0P Dp20	32	164
H6VM250	66.7	31.8	M14x2.0P Dp20	32	112

SPECIFICATIONS

MODEL	DISPLACEMENT (cc/rev)		MAX PRESSURE (Kg/cm²)	TORQUE (Nm)	R.P.M		FLOW MAX (L/min)
	MAX	MIN			MAX	MIN	
H6VM55	55	35	350	349	7000	4450	244
H6VM80	80	51		509	6150	3900	312
H6VM107	107	68		681	5600	3500	380
H6VM160	160	101		1019	4900	3100	496
H6VM200	200	126		1273	4600	2900	580
H6VM250	250	188		1391	3600	2700	675

Dimensions of Shaft End(Spline Type)

MODEL	No.of teeth	Pitch circle dia(mm)	Module	Pressure angle
H6VM55	14	28	2.0	30°
H6VM80	16	32	2.0	30°
H6VM107	18	36	2.0	30°
H6VM160	24	48	2.0	30°
H6VM200	24	48	2.0	30°
H6VM250	24	48	2.0	30°

DIMENSIONS

(mm)

MODEL	A	B	C	D	E	F	G	H	J	K	L
H6VM55	225	90	280	65	25	67	Ø30	Ø125	Ø160	Ø13.5	150
H6VM80	240	95	300	72	25	75	Ø35	Ø140	Ø180	Ø13.5	165
H6VM107	255	100	320	83	32	80	Ø39.5	Ø160	Ø200	Ø17.5	190
H6VM160	292	107	360	90	32	92	Ø45	Ø180	Ø224	Ø17.5	210
H6VM200	352	143	345	95	39	96	Ø49.6	Ø200	Ø250	Ø22	236
H6VM250	441	189	372	108	48	82	Ø50	Ø200	Ø250	Ø22	236

HBF90M-K
BENT AXIS TYPE AXIAL PISTON MOTOR

※USABLE CIRCUMSTANCE
50℃, ISO VG46, -20~90℃



SPECIFICATIONS

MODEL	DISPLACEMENT	NORMAL PRESSURE (kg / cm²)	TORQUE (Nm)	R.P.M	FLOW MAX L / min
HBF90M (K-TYPE)	90	350	492	3500	315

Dimensions of Shaft End(Spline Type)

MODEL	No.of teeth	Pitch circle dia(mm)	Module	Pressure angle	Standard
HBF90M (K-TYPE)	19	31.673	1.667	20°	JIS B 1603 :1995

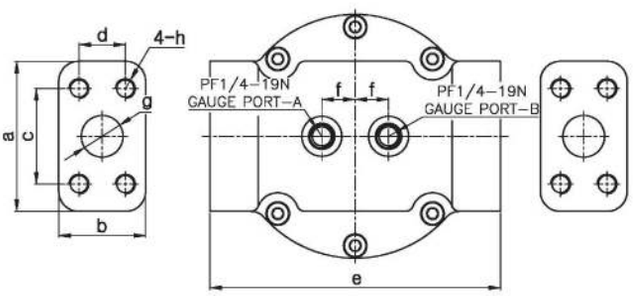

Flange Mounting face for Suction & Delivery Port

(mm)

MODEL	a	b	c	d	e	f	g	h
HBF90M (K-TYPE)	90	52	57.2	27.8	174	20	ø25	M12X1.75P Dp25

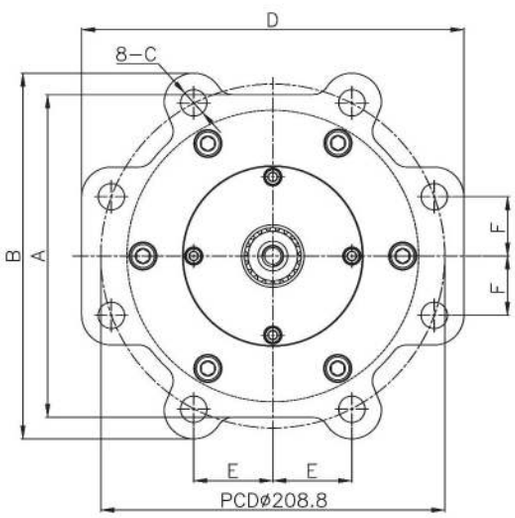

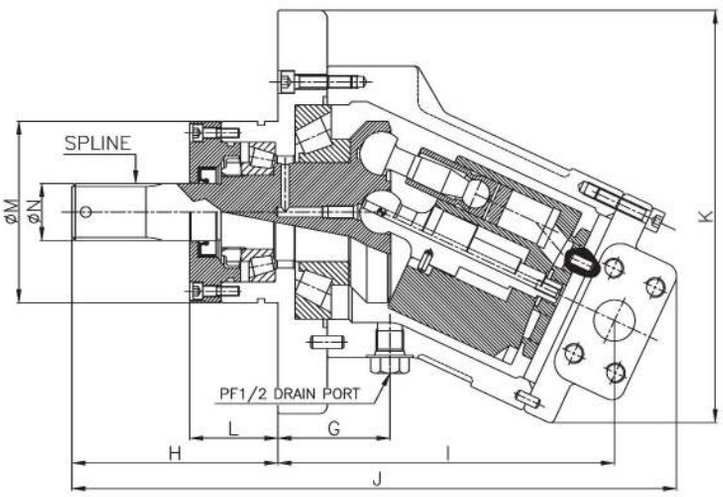

DIMENSIONS

(mm)

MODEL	A	B	C	D	E	F	G	H	I	J	K	L	M	N
HBF90M (K-TYPE)	196	222	16	232	48	36	68	125	204	367	250.4	53.5	110	34.5

HBF90M-S
BENT AXIS TYPE AXIAL PISTON MOTOR

※USABLE CIRCUMSTANCE
50℃, ISO VG46, -20~90℃



SPECIFICATIONS

MODEL	DISPLACEMENT (cc/rev)	NORMAL PRESSURE (kg / cm²)	TORQUE (Nm)	R.P.M	FLOW MAX L / min
HBF90M (S-TYPE)	90	350	492	3500	315

Dimensions of Shaft End(Spline Type)

MODEL	No.of teeth	Pitch circle dia(mm)	Module	Pressure angle	Standard
HBF90M (S-TYPE)	21	33.337	16/32	30°	ANSI B92.1b :1970

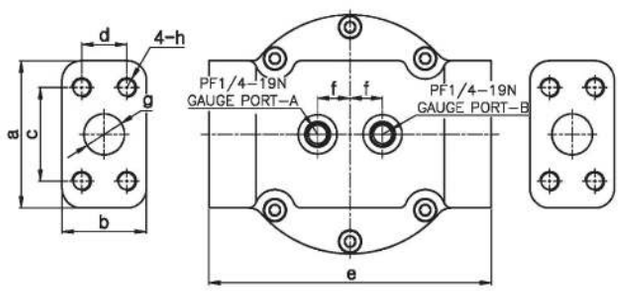

Flange Mounting face for Suction & Delivery Port

(mm)

MODEL	a	b	c	d	e	f	g	h
HBF90M (S-TYPE)	90	52	57.2	27.8	155	20	ø25	M12X1.75P Dp25

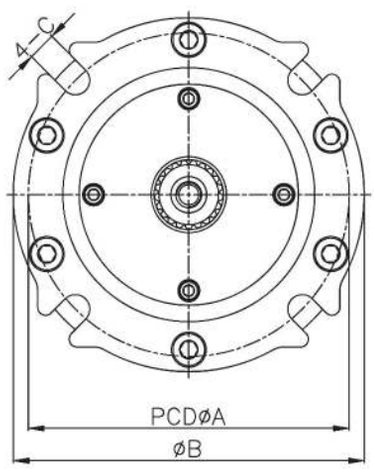

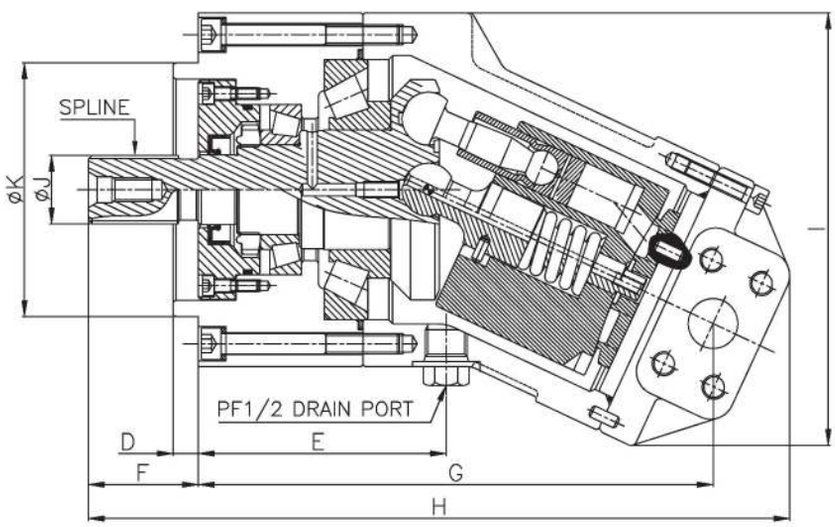

DIMENSIONS

(mm)

MODEL	A	B	C	D	E	F	G	H	I	J	K
HBF90M (S-TYPE)	155	177	14.5	12.7	125	55.5	260	354	216	34.5	127

H2FM SERIES
BENT AXIS TYPE AXIAL PISTON MOTORS

SPECIFICATIONS

MODEL	H2FM08	H2FM10	H2FM12	H2FM16	H2FM23	H2FM28	H2FM32
Discharge Rate (cc/rev)	8	10	12	16	23	28	32
Max. pressure (kg/cm²)	400						
Max.speed(rpm)	8000				6300		



※USABLE CIRCUMSTANCE
50℃, ISO VG46, -20~90℃

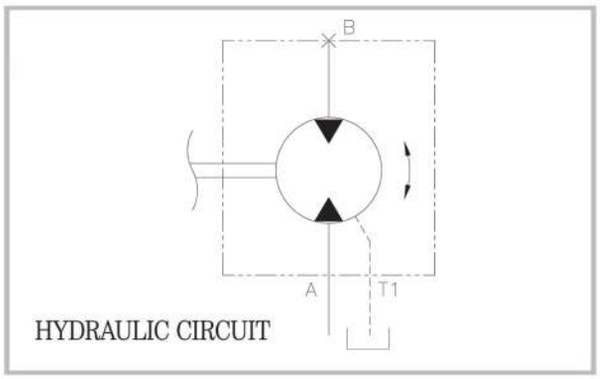

HYDRAULIC CIRCUIT

Dimensions of Shaft End (Spline Type)

MODEL	No. of teeth	Pitch Circle Dia(mm)	Module	Pressure Angle	Standard
H2FM08/10/12	14	17.5	1.25	30°	DIN 5480
H2FM08/10/12/16/23/28	18	22.5	1.25	30°	DIN 5480
H2FM23/28/32	14	28	2	30°	DIN 5480

Dimensions of Shaft End (Key Type)

MODEL	a	b	c	d	e	f	Standard
H2FM08/10/12	20	22.5	37.6	40	32	6	DIN 6885
H2FM08/10/12/16	25	28	37.6	40	32	8	DIN 6885
H2FM23/28	25	28	47.6	50	40	8	DIN 6885
H2FM23/28/32	30	33	47.6	50	40	8	DIN 6885

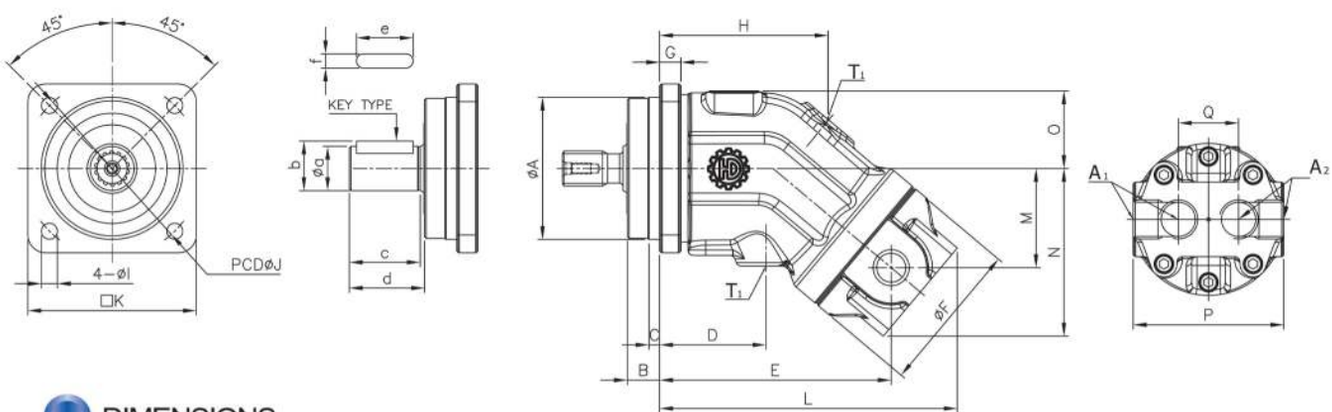

DIMENSIONS

(mm)

MODEL	A	B	C	D	E	F	G	H	I	J	K	L	M	N	O	P	Q	T1	A1	A2
H2FM08/10/12/16	80	18.2	6	60	131	85	12	95	9	100	95	168	56	95	44	140	34	M12X1.5	M22X1.5	M22.X1.5
H2FM23/28/32	100	23.2	8	42	142	106	18	132	11	125	118	196	70	123	58	123	58	M16X1.5	M27X2.0	M27X2.0

HAG SERIES
TRAVEL MOTOR ASS'Y

SPECIFICATIONS

MODEL	REDUCTION GEAR				HYDRAURIC MOTOR						APPLICATION
	GEAR RATIO	THEORETICAL OUTPUT TORQUE		OUTPUT SPEED	DISPLACEMENT	OUTPUT SPEED	MAX PRESSURE		BRAKE TORQUE(AT MOTOR SHAFT)		
	i	Kgf·m	N·m	Max. rpm	cc/rev	Max. rpm	Kgf·cm²	MPa	Kgf·m	N·m	TON
HAG18VP	42.958	220	2,160	70	18	3,800	250	24.5	2.5	24.5	2.5
HAG26VP	53	400	3,920	60	27.6	3,500	250	27.5	4	39.2	4.5
HAG33VP	58.943	550	5,390	60	33.8	3,300	280	27.5	5	49	6



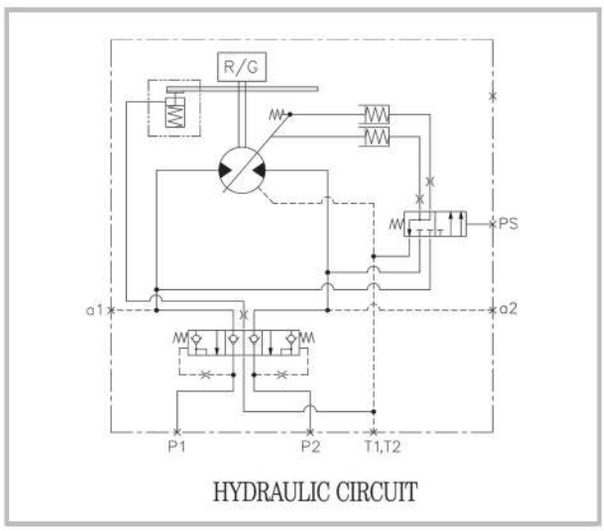

HYDRAULIC CIRCUIT

Mounting face for Suction & Delivery Port (mm)

MODEL	a	b	c	d	e	f
HAG18VP	40	59	44	108	PF1/2	PF1/4
HAG26VP	45	48				PF3/8
HAG33VP		50				

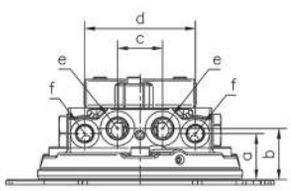

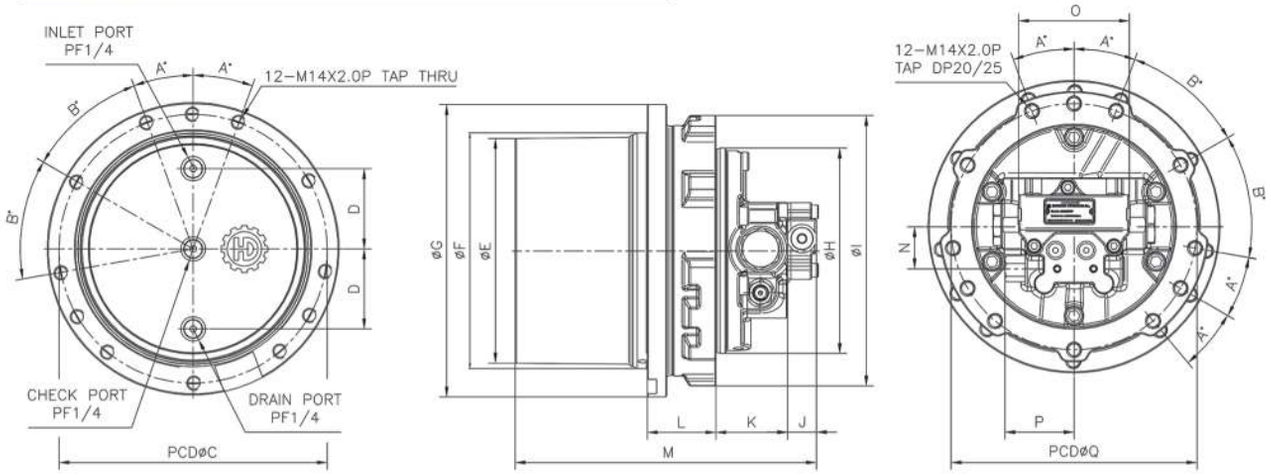

DIMENSIONS

(mm)

MODEL	A	B	C	D	E	F	G	H	I	J	K	L	M	N	O	P	Q
HAG18VP	45	-	215	65	182	190	238	165	215	28	70	50	263	41	80	62	192
HAG26VP	40	-	232	70	198	204	255				60	70	288		108	70	
HAG33VP	20	40	262	78	219	230	285	200	263.5		70	67	294			68	240

HM SERIES
TRAVEL MOTOR ASS'Y

SPECIFICATIONS

MODEL	REDUCTION GEAR				HYDRAURIC MOTOR						APPLICATION
	GEAR RATIO	THEORETICAL OUTPUT TORQUE		OUTPUT SPEED	DISPLACEMENT	OUTPUT SPEED	MAX PRESSURE		BRAKE TORQUE(AT MOTOR SHAFT)		
	i	Kgf·m	N·m	Max. rpm	cc/rev	Max. rpm	Kgf·cm²	MPa	Kgf·m	N·m	TON
HM05/06VA	68.6	570	5,590	60	27.5	3,600	250	24.5	6.6	64.7	4~5 (6)
HM07VA	53.706	810	7,943	55.8	45.2 43.7	3,500	250	24.5	8.4	82	5~8
HM08VA	53.706	1,000	9,806	65	45.2	3,900	300	29.4	8.4	82	5~9
HM09VA	53.706	1,100	10,787	65	49.2	3,900	300	29.4	8.4	82	6~8
HM10VA	53.706	1,200	11,767	70	53.2	3,900	300	29.4	8.4	82	8~10
HM15VA	53.706	1,850	18,130	60	79.4(80)	3,200	350	34.3	19.7	193	10~14
HM18VA	53.706	1,850	18,130	60	79.4(80)	3,200	350	34.3	19.7	193	10~14
HM22VA	53.706	2,445	23,961	60	82.8(83)	3,200	350	34.3	21	205	13~15

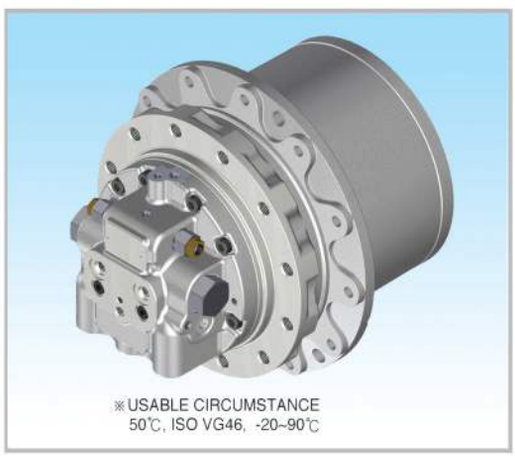

※USABLE CIRCUMSTANCE
50℃, ISO VG46, -20~90℃

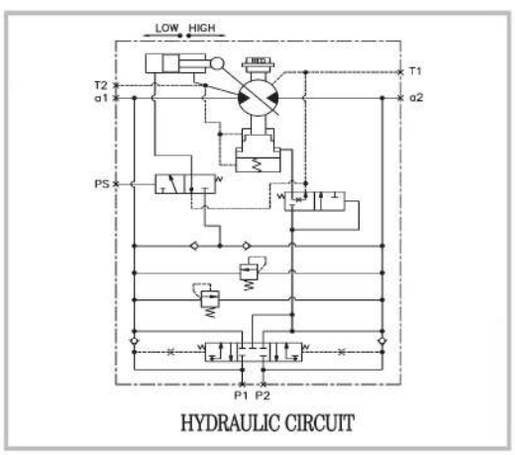

HYDRAULIC CIRCUIT

Mounting face for Suction & Delivery Port

(mm)

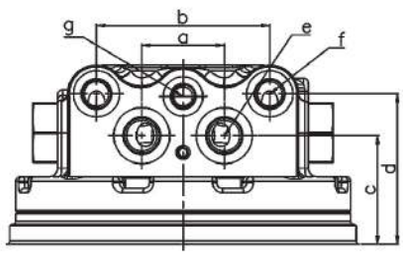

MODEL	a	b	c	d	e	f	g
HM05/06VA	52	100	46	69	PF1/2	PF1/4	PF1/4
HM07VA	50	105	65.8	91		PF3/8	
HM08VA							
HM09VA							
HM10VA							
HM15VA		116	87	110	PF3/4	PF1/2	
HM18VA							
HM22VA							

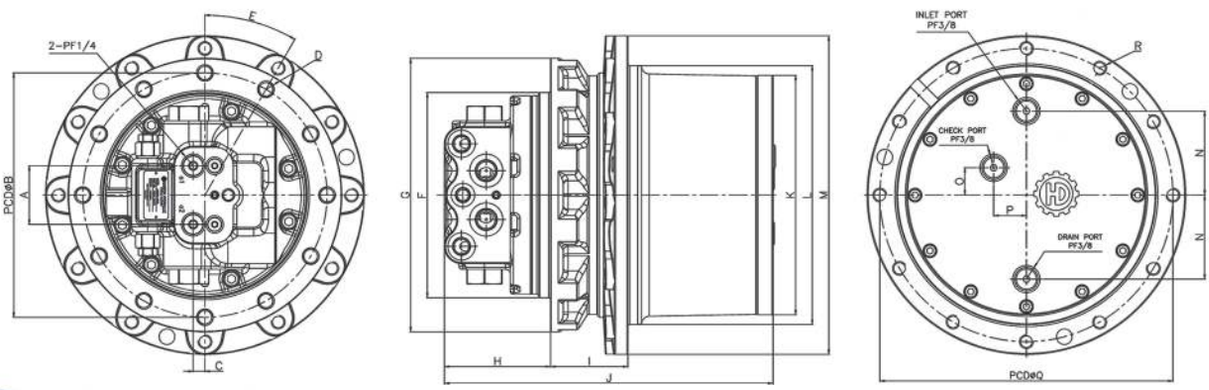

DIMENSIONS

(mm)

MODEL	A	B	C	D	E	F	G	H	I	J	K	L	M	N	O	P	Q	R
HM05/06VA	48	220	9.6	9-M14X2.0P	15°	180	246	132	18.4	272.2	196	230	288	85	-	-	262	9-M14X2.0P
HM07VA	60	244	12	12-M14X2.0P	30°	210	268	110	68	332.5	244	250	306	86	28	33.5	282	12-M14X2.0P
HM08VA		250		12-M16X2.0P			280		80	340	245	265	326				300	
HM09VA																		
HM10VA																		
HM15VA	72	280	30	16-M16X2.0P	22.5°	246	308	134	99.5	389	285	324	394		-	86	364	18-M16X2.0P
HM18VA				20-M16X2.0P	18°													15-M16X2.0P
HM22VA																		18-M16X2.0P

HG08 FOR MFB150/160 (WITHOUT TIME DELAY VALVE) SWING MOTOR ASS'Y

SPECIFICATIONS

MODEL	HG08 FOR MFB150/160
Discharge Rate(cc/rev)	151
Max. Flow (L/min)	253
Brake Torque (N·m)	685~891

Dimensions of Shaft End(Spline Type)

MODEL	No. of teeth	Pitch circle dia(mm)	Module	Pressure angle	Standard
HG08 FOR MFB150/160	13	41.275	8/16	30°	SAE

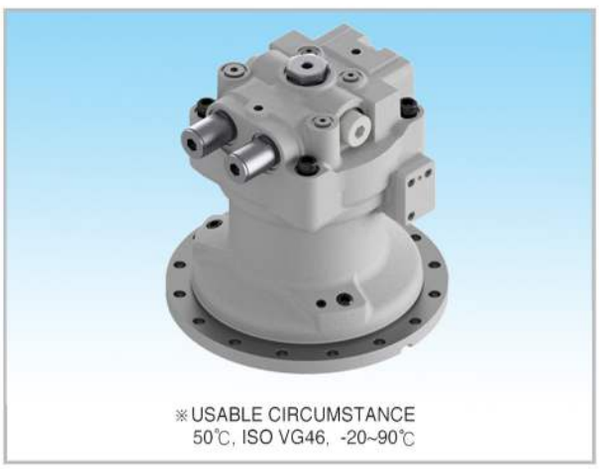

※USABLE CIRCUMSTANCE
50℃, ISO VG46, -20~90℃

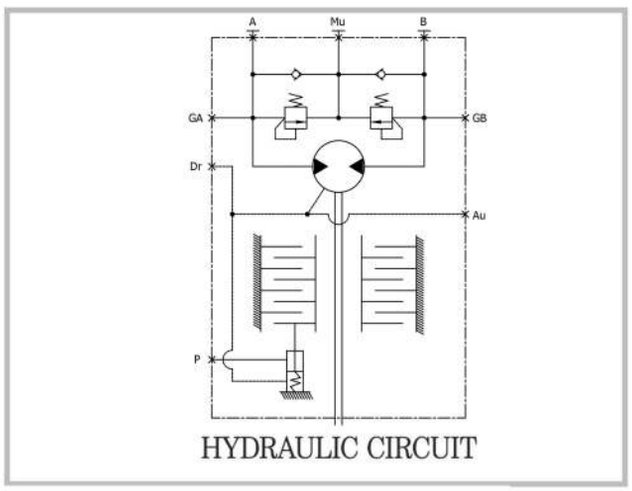

HYDRAULIC CIRCUIT

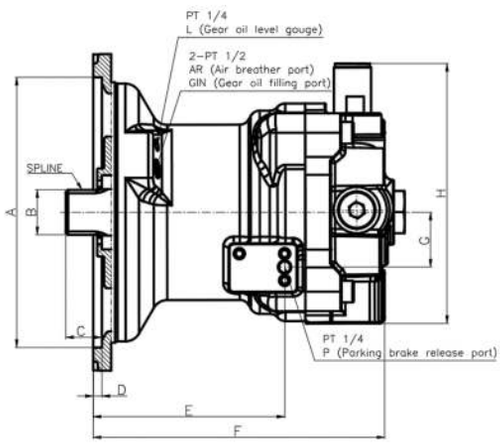

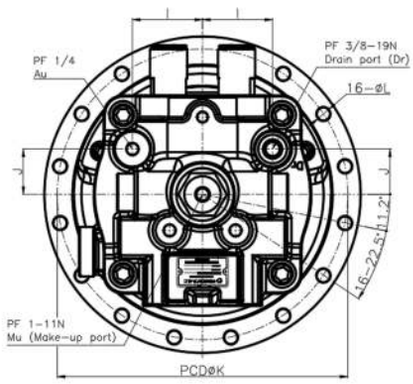

Flange Mounting face for Suction Port

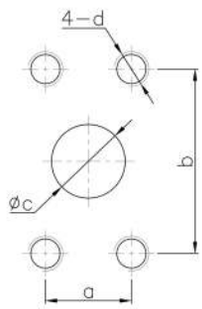

(mm)

a	22.2
b	47.6
c	19 SAE J518 3/4
d	M10x1.5P DP25.5

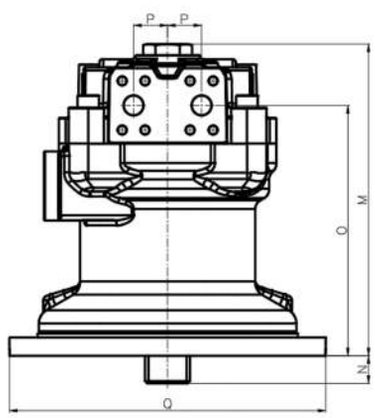

DIMENSIONS

(mm)

MODEL	A	B	C	D	E	F	G	H	I	J	K	L	M	N	O	P	Q
HG08 FOR MFB150/160	262	43.6	35	8.5	186	283	53	252	68	44	282	13	302	27	243	33	307

HG08 FOR MFB150/160 (WITH TIME DELAY VALVE) SWING MOTOR ASS'Y

SPECIFICATIONS

MODEL	HG08 FOR MFB150/160
Discharge Rate(cc/rev)	151
Max. Flow (L/min)	253
Brake Torque (N·m)	685~891

Dimensions of Shaft End(Spline Type)

MODEL	No. of teeth	Pitch circle dia(mm)	Module	Pressure angle	Standard
HG08 FOR MFB150/160	13	41.275	8/16	30°	SAE



※USABLE CIRCUMSTANCE
50℃, ISO VG46, -20~90℃

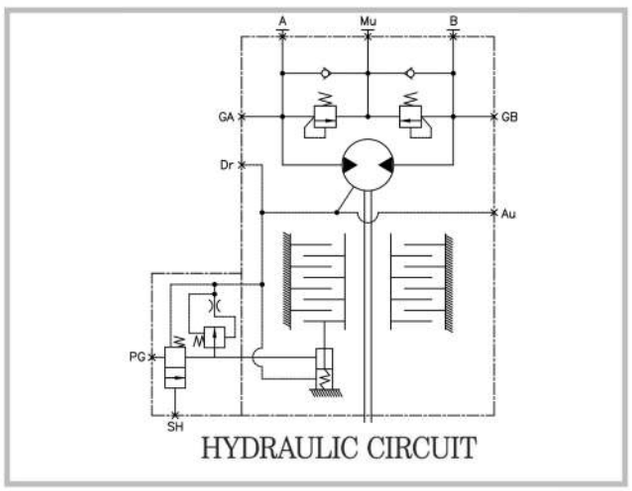

HYDRAULIC CIRCUIT

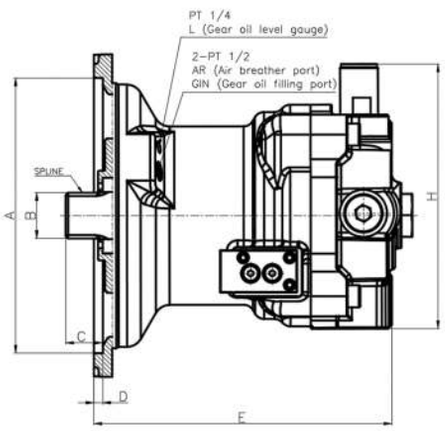

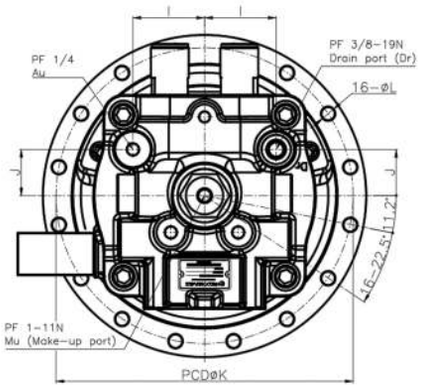

Flange Mounting face for Suction Port

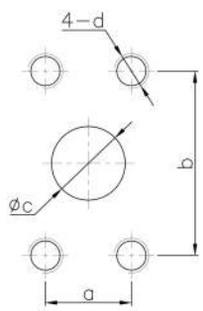

(mm)

a	22.2
b	47.6
c	19 SAE J518 3/4
d	M10x1.5P DP25.5

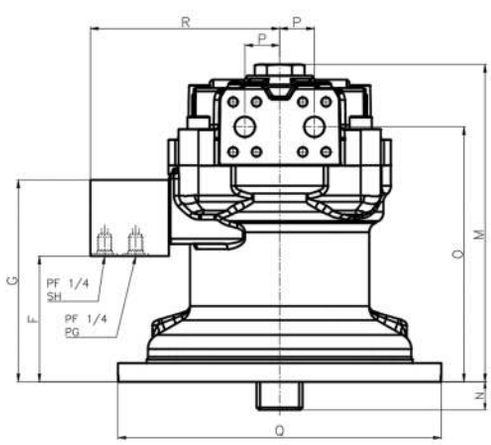

DIMENSIONS

(mm)

MODEL	A	B	C	D	E	F	G	H	I	J	K	L	M	N	O	P	Q	R
HG08 FOR MFB150/160	262	43.6	35	8.5	283	120	192.5	252	68	44	282	13	302	27	243	33	307	179.5

SPECIFICATIONS

MODEL	AP2D10 / 12 / 14 / 16 / 18
Discharge Rate(cc/rev)	P1
	6.5 / 9 / 10.5
Max.Pressure(kg/cm²)	210
Max.Speed(rpm)	2800



※USABLE CIRCUMSTANCE
50℃, ISO VG46, -20~90℃

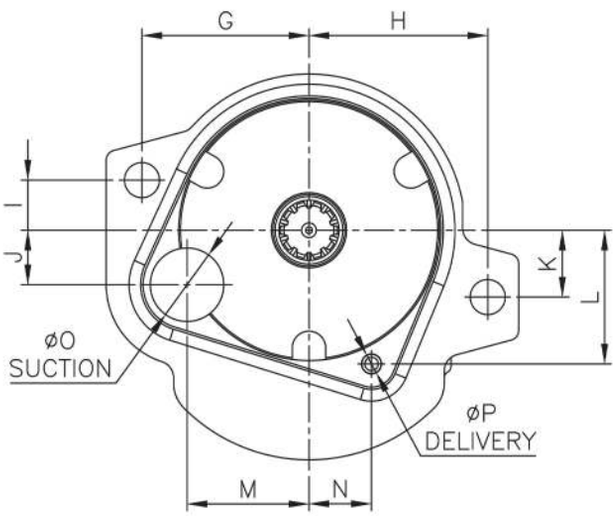

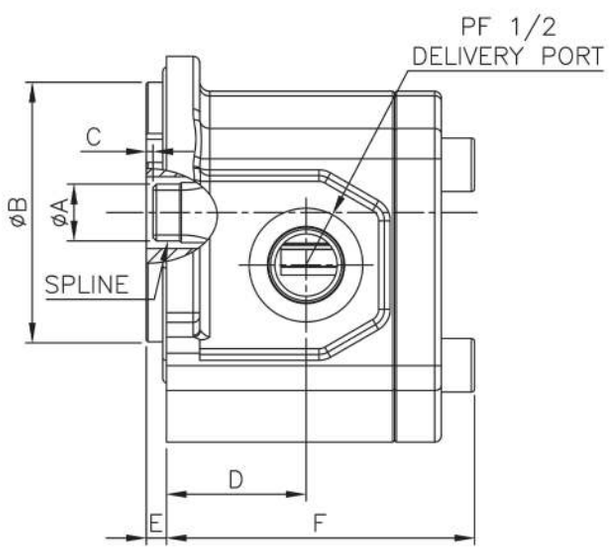

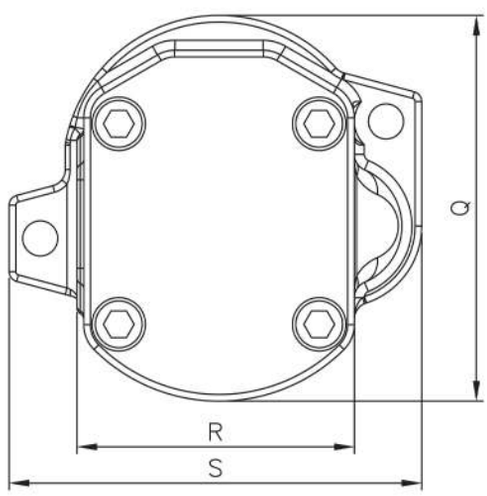

DIMENSIONS

(mm)

MODEL	SPLINE	A	B	C	D	E	F	G	H	I	J	K	L	M	N	O	P	Q	R	S
AP2D SERIES	Z10	17	78	2	41.8	6	92.3	50	53.5	15	16.3	20	40	36.5	18.7	22	4	115.5	83	123.5

AP2D SERIES
SINGLE TYPE GEAR PUMP

SPECIFICATIONS

MODEL	AP2D21 / 25 / 28 / 36			
Discharge Rate(cc/rev)	P1			
	12	16.8	18.8	22
Max.Pressure(kg/cm²)	210			
Max.Speed(rpm)	2200/2600/2800			



※USABLE CIRCUMSTANCE
50℃, ISO VG46, -20~90℃

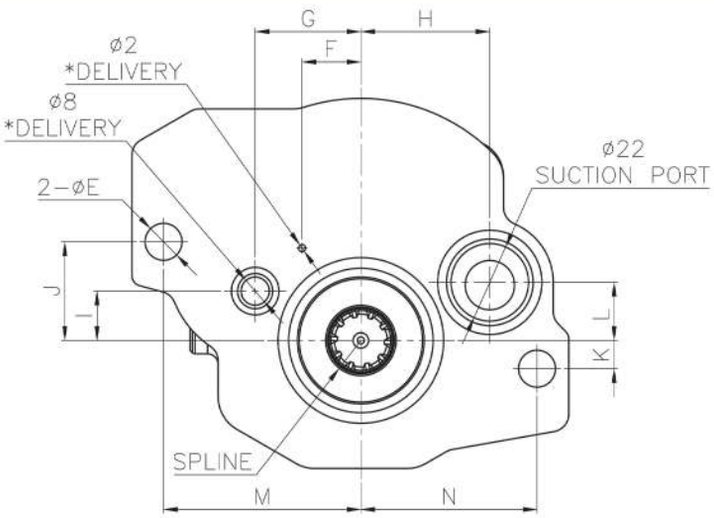

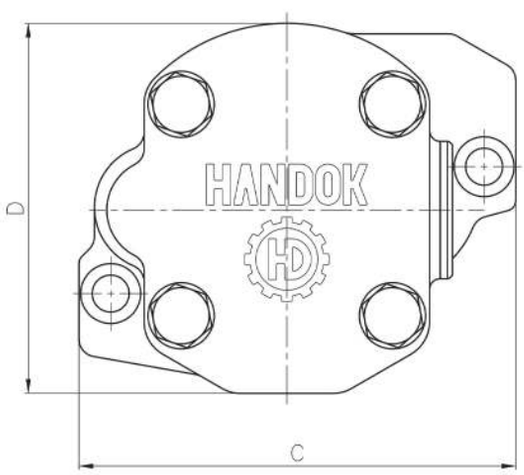

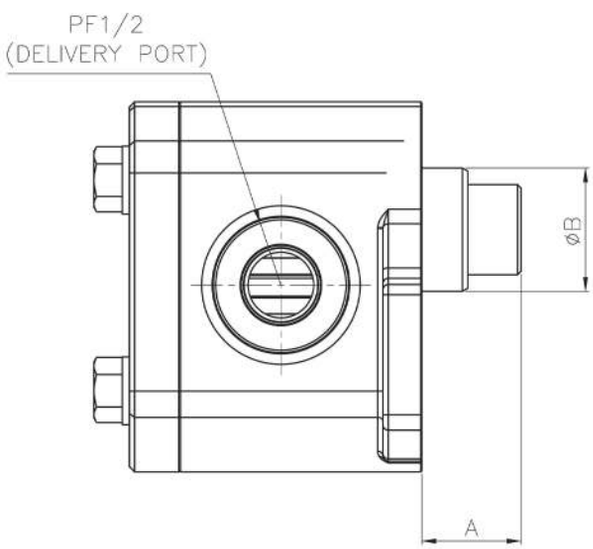

DIMENSIONS

(mm)

MODEL	A	B	C	D	E	F	G	H	I	J	K	L	M	N	SPLINE
AP2D SERIES	28.6	35	124	105	10.5	16.7	30	36.6	14	28	8	16.5	56	50	Z10

AP2D SERIES
DOUBLE TYPE GEAR PUMP

SPECIFICATIONS

MODEL	AP2D21 / 25 / 28 / 36						
Discharge Rate(cc/rev)	P1				P2		
	12	16.8	18.8	22	6	9	10
Max.Pressure(kg/cm²)	210				50		
Max.Speed(rpm)	2200/2600/2800						

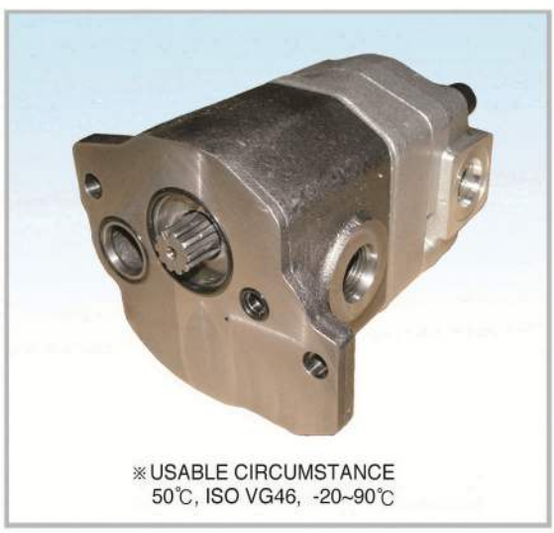

※USABLE CIRCUMSTANCE
50℃, ISO VG46, -20~90℃

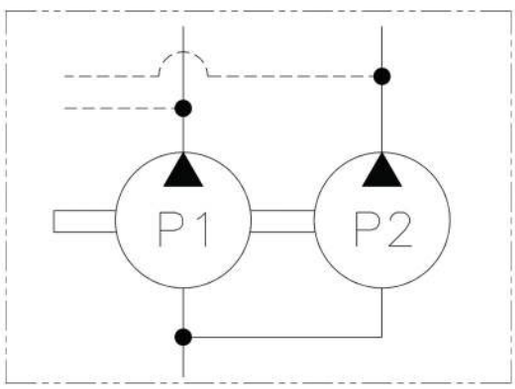

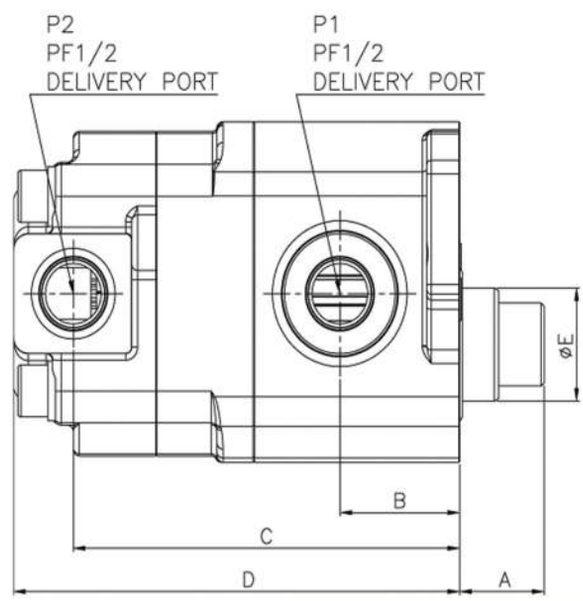

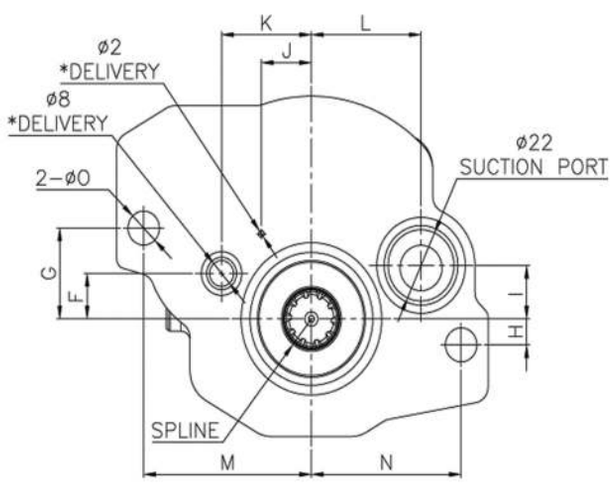

DIMENSIONS

(mm)

MODEL	A	B	C	D	E	F	G	H	I	J	K	L	M	N	O	SPLINE
AP2D SERIES	28.2	40	129	149	35	14	28	8	16.5	16.7	30	36.6	56	50	10.5	Z10

AP2D SERIES
SINGLE TYPE GEAR PUMP

SPECIFICATIONS

MODEL	AP2D21/25/28/36
Discharge Rate (cc/rev)	9
Max. Pressure (kg/cm²)	210
Max. Speed (rpm)	2200



※USABLE CIRCUMSTANCE
50℃, ISO VG46, -20~90℃

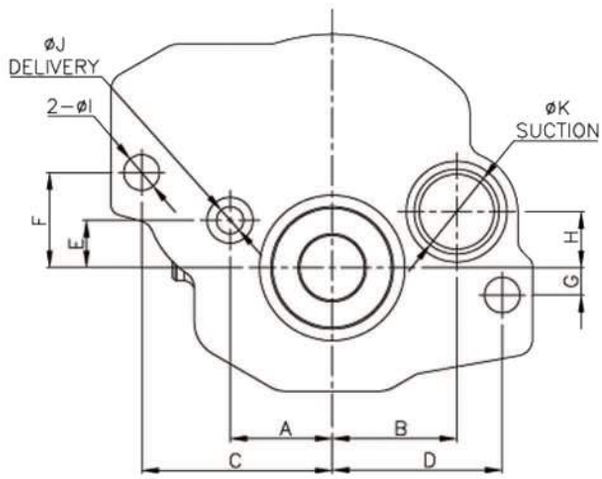

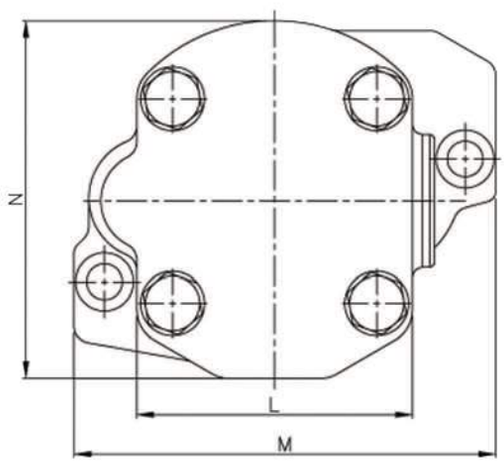

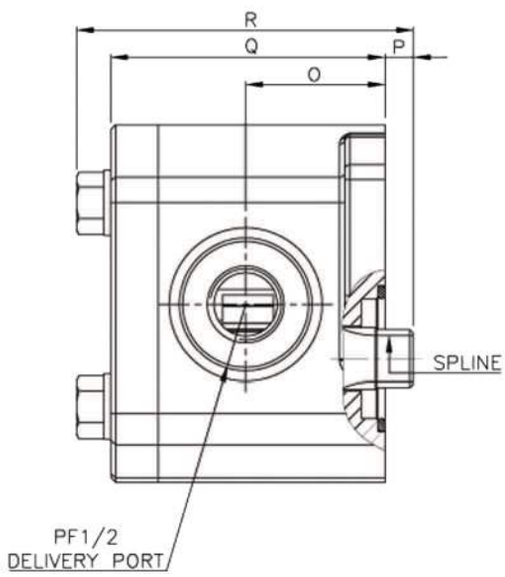

DIMENSIONS

MODEL	A	B	C	D	E	F	G	H	I	J	K	L	M	N	O	P	Q	R	SPLINE
AP2D21 AP2D25 AP2D28 AP2D36	30	36.6	56	50	14	28	8	16.5	10.5	8	22	81	124	105	41	8.3	80.7	99	Z10

AP2D36 FOR YANMAR
SINGLE TYPE GEAR PUMP

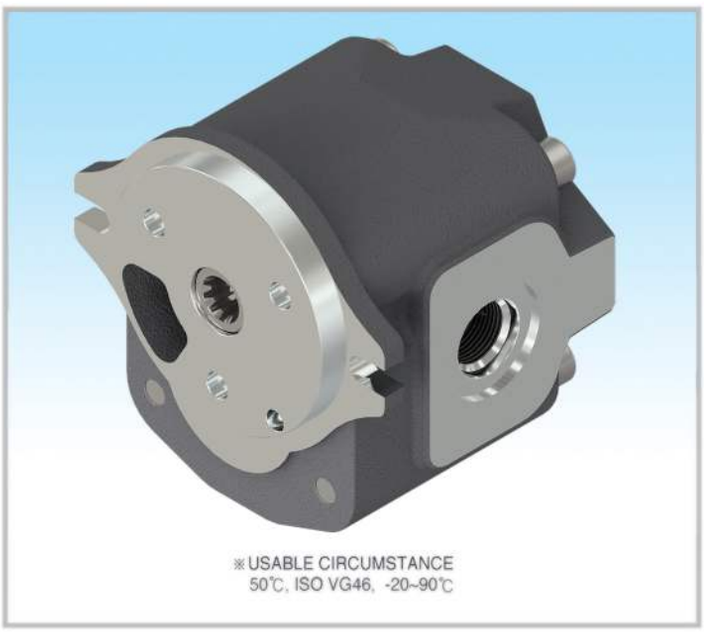

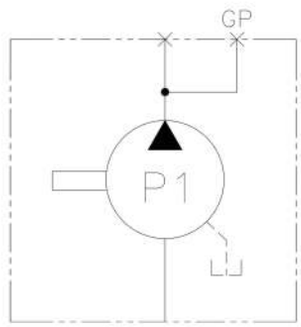

SPECIFICATIONS

MODEL	AP2D36 (FOR YANMAR)	
Discharge Rate(cc/rev)	25	30
Max.Pressure(kg/cm²)	214	
Max.Speed(rpm)	2,800	
Direction	CW	

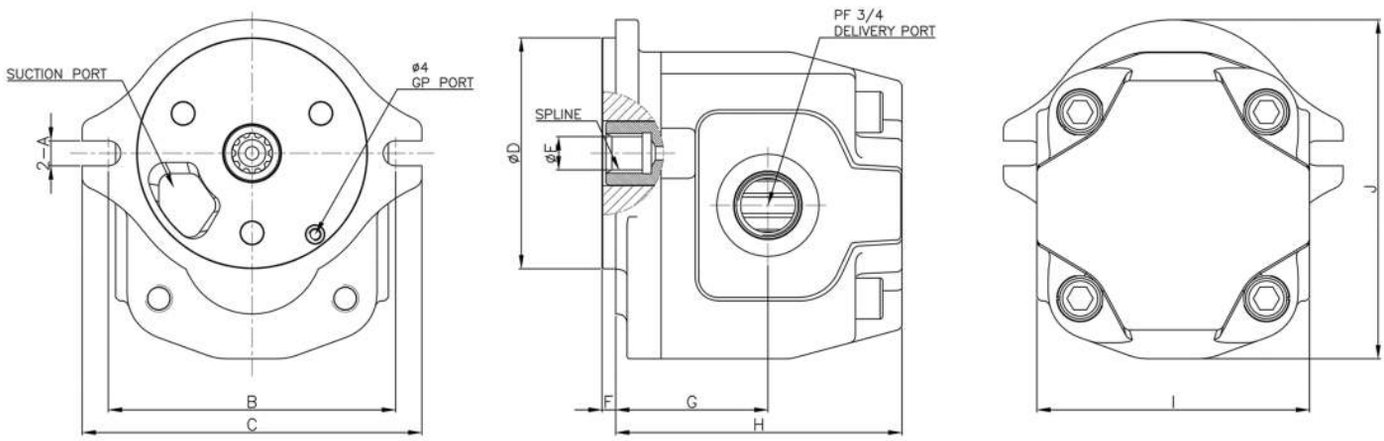

DIMENSIONS

(mm)

MODEL	A	B	C	D	E	F	G	H	I	J	SPLINE
AP2D36 (FOR YANMAR -25cc/rev)	11	126.4	149.5	101.6	14.6	6	60.5	121	120	149.2	10T
AP2D36 (FOR YANMAR-30cc/rev)							67	126			

AP2D25/28/36/38 FOR HITACHI
DOUBLE TYPE GEAR PUMP

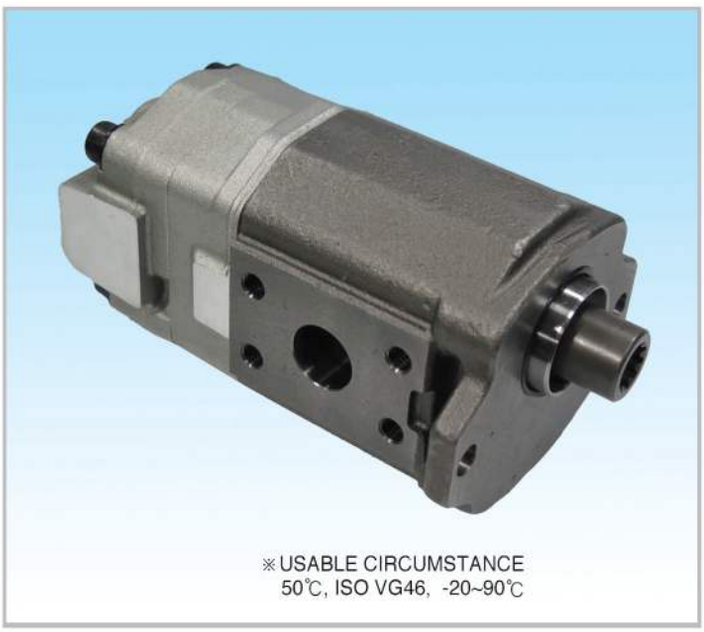

※USABLE CIRCUMSTANCE
50℃, ISO VG46, -20~90℃

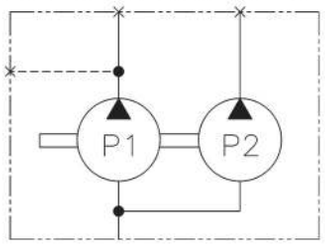

SPECIFICATIONS

MODEL	AP2D25/28/36/38 (FOR ZX60 & ZX75)	
Discharge Rate (cc/rev)	P1	P2
	21	11
Max. pressure (kg/cm²)	210	50
Max. Speed (rpm)	2100	

ZX60 SUCTION PORT(for AP2D25/28)

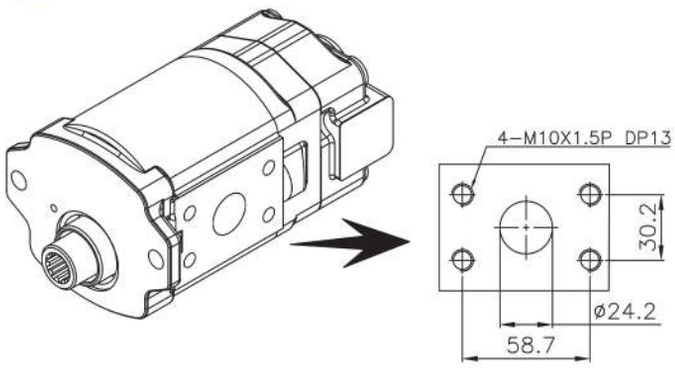

ZX75 SUCTION PORT(for AP2D36/38)

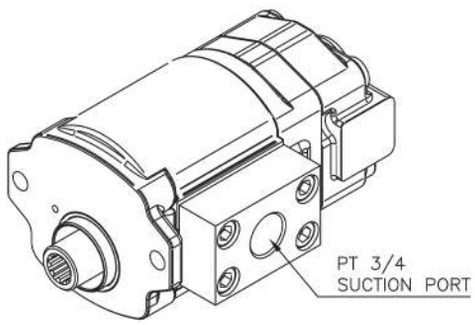

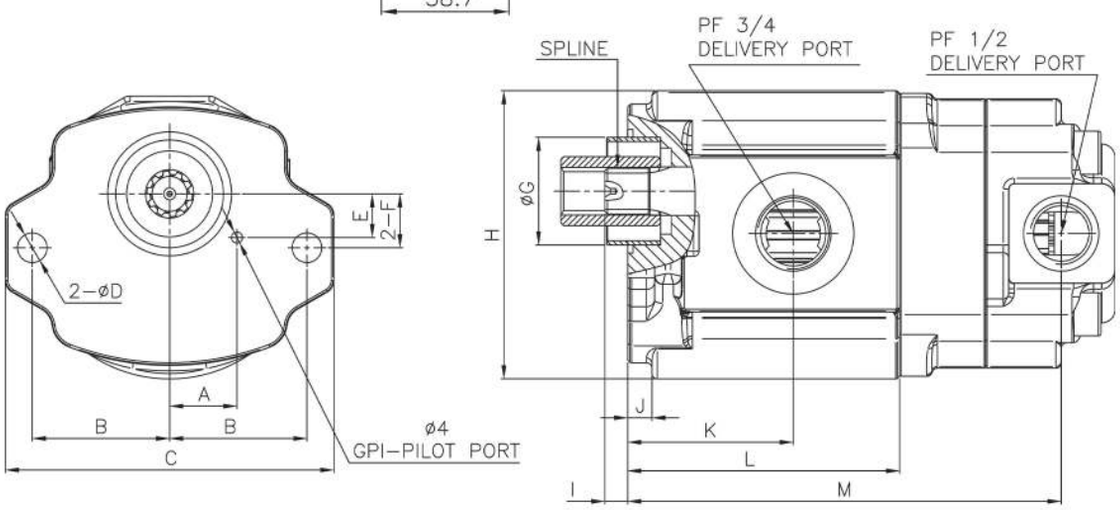

DIMENSIONS

(mm)

MODEL	A	B	C	D	E	F	G	H	I	J	K	L	M	SPLINE
AP2D25/28/36/38 (FOR ZX60&ZX75&CAT307)	25	51	122	11	16.2	20	40	107	8.5	11	61.5	101	161	Z10

AP2D10/12/14/16/18
DOUBLE TYPE GEAR PUMP



※USABLE CIRCUMSTANCE
50℃, ISO VG46, -20~90℃

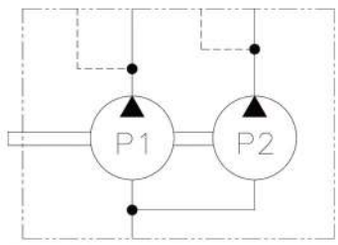

SPECIFICATIONS

MODEL	AP2D10/12/14/16/18 (FOR UCHIDA)	
Discharge Rate (cc/rev)	P1	P2
	8	4
Max. pressure (kg/cm²)	255	50
Max. Speed (rpm)	2800	

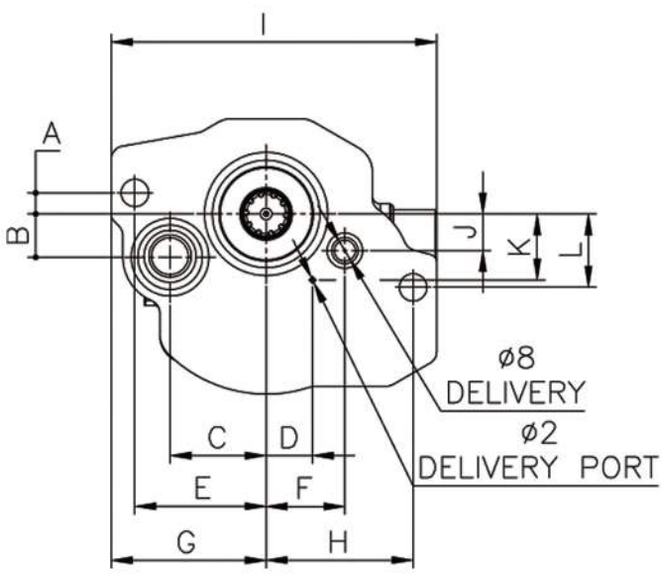

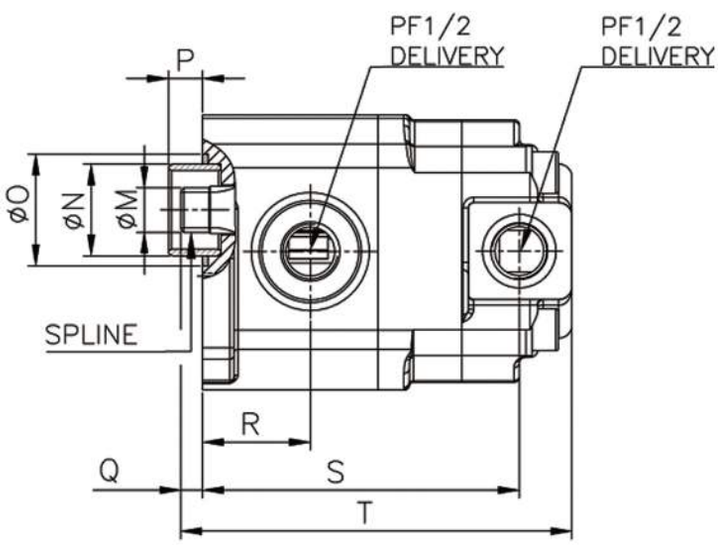

DIMENSIONS

(mm)

MODEL	A	B	C	D	E	F	G	H	I	J	K	L	M	N	O	P	Q	R	S	T	SPLINE
AP2D10 /12/14 AP2D16/18	8	16.5	36.6	17.7	50	30	59	56	124	14	25.2	28	17	35	42.7	13	8.3	41	120.6	149	Z10

A10VD43
SINGLE TYPE GEAR PUMP

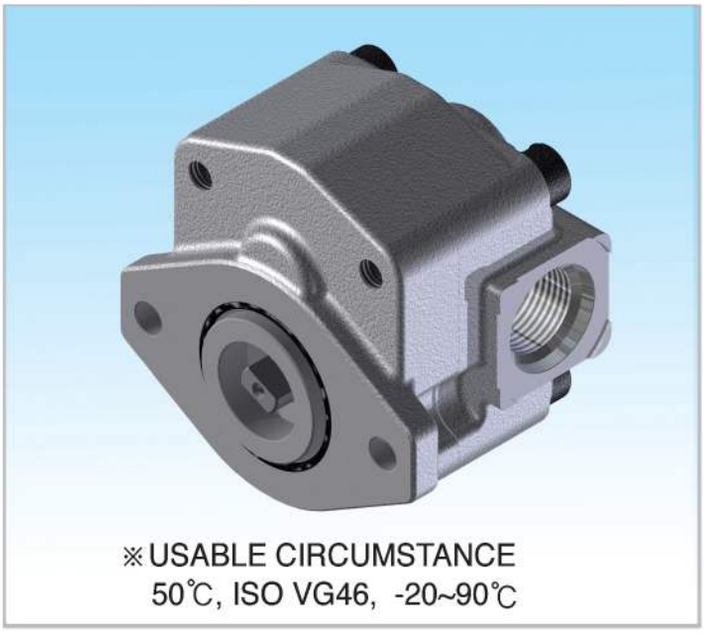

※USABLE CIRCUMSTANCE
50℃, ISO VG46, -20~90℃

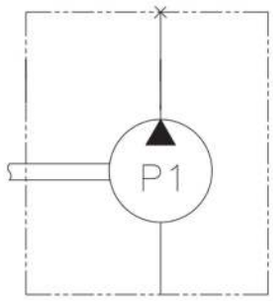

SPECIFICATIONS

MODEL	A10VD43(KEY TYPE)
Discharge Rate (cc/rev)	9 /10.5
Max. Pressure (kg/cm²)	50
Max. Speed (rpm)	2000

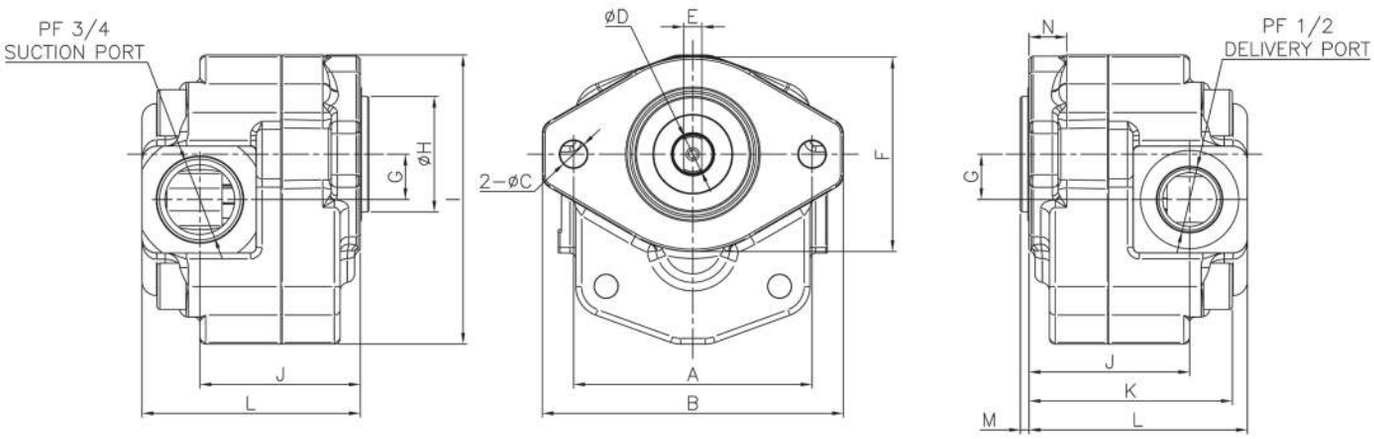

DIMENSIONS

(mm)

MODEL	A	B	C	D	E	F	G	H	I	J	K	L	M	N
A10VD43(KEY TYPE)	82.5	104	9.3	13	6.3	67.3	15.7	40	100	55.5	70.3	75.5	3	13

A10VD43
SINGLE TYPE GEAR PUMP



※USABLE CIRCUMSTANCE
50℃, ISO VG46, -20~90℃

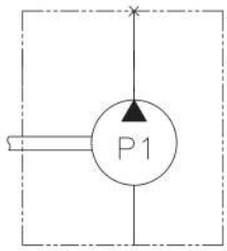

SPECIFICATIONS

MODEL	A10VD43
Discharge Rate (cc/rev)	12
Max. Pressure (kg/cm²)	180
Max. Speed (rpm)	2800

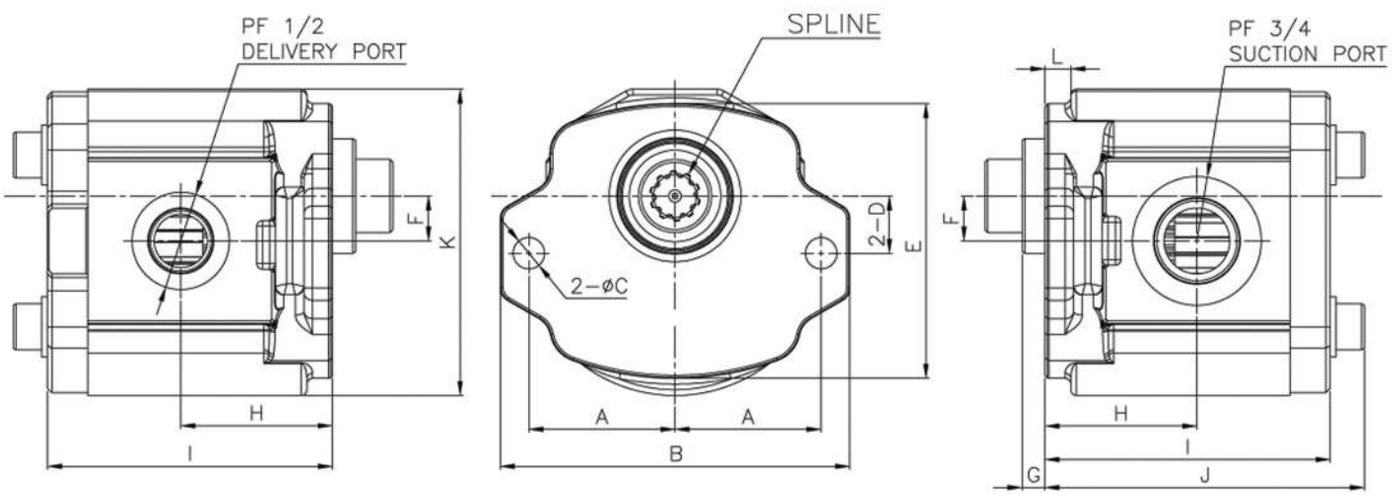

DIMENSIONS

(mm)

MODEL	A	B	C	D	E	F	G	H	I	J	K	L	SPLINE
A10VD43	51	122	11	20	96	15.7	8	53	99.5	112	107	10	Z10

A10VD43
DOUBLE TYPE GEAR PUMP



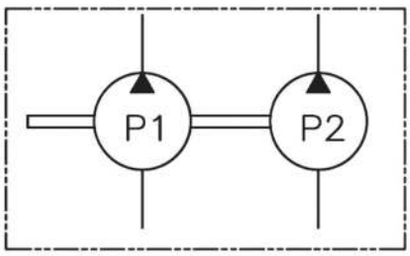

SPECIFICATIONS

MODEL	A10VD43	
Discharge Rate (cc/rev)	P1	P2
	12	10
Max. pressure (kg/cm²)	180	50
Max. Speed (rpm)	2800	

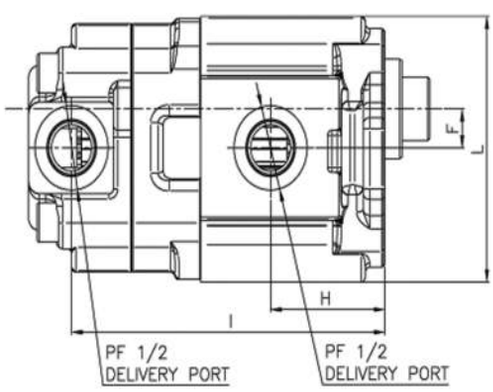

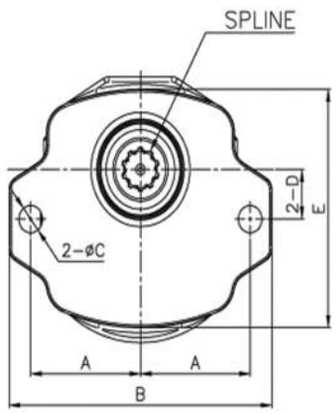

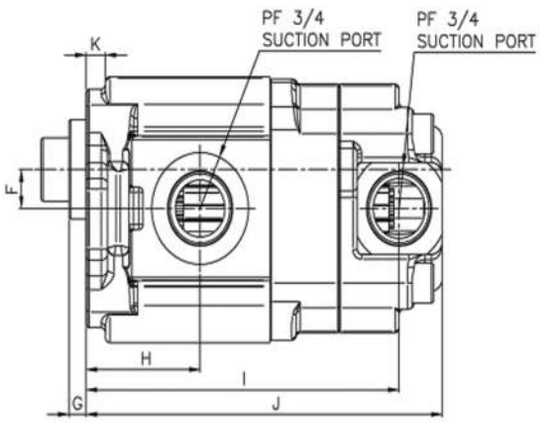

DIMENSIONS

(mm)

MODEL	A	B	C	D	E	F	G	H	I	J	K	L	SPLINE
A10VD43	51	122	11	20	96	15.7	8	53	132.5	145.5	10	107	Z10

HGP32/32, 22/22
DOUBLE TYPE GEAR PUMPS

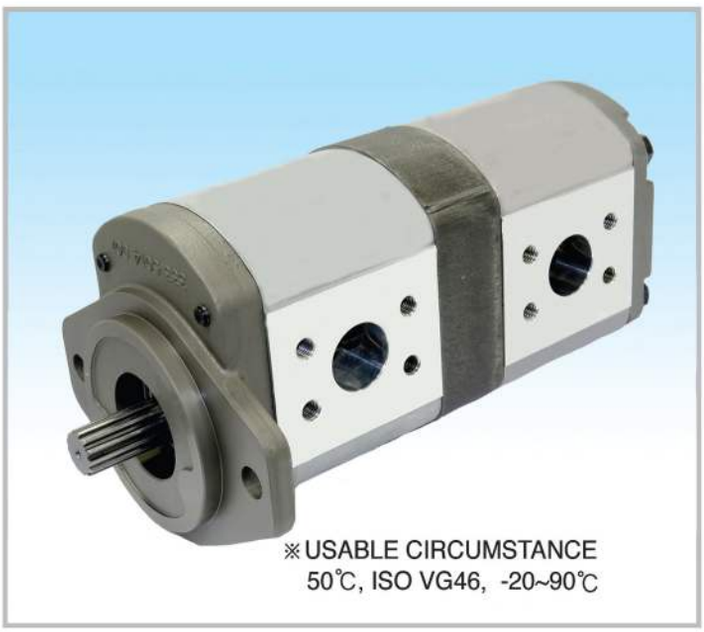

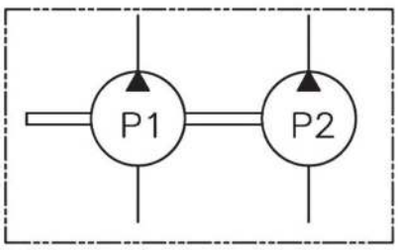

SPECIFICATIONS

MODEL	HGP32/32 , HGP22/22	
Discharge Rate (cc/rev)	P1	P2
	32	32
	22	22
Max. pressure (kg/cm²)	250	
Max. Speed (rpm)	2800	

Flange Mounting face for Suction Port

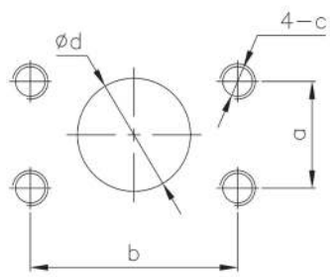

(mm)

	HGP32/32	HGP22/22
a	58.7	30.2
b	52.4	26.2
c	M10X1.5PXDp20	
d	Ø32	Ø25.4

Flange Mounting face for Delivery Port

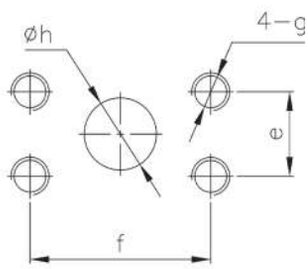

(mm)

	HGP32/32 HGP22/22
e	22.2
f	47.6
g	M10X1.5PXDp20
h	Ø19

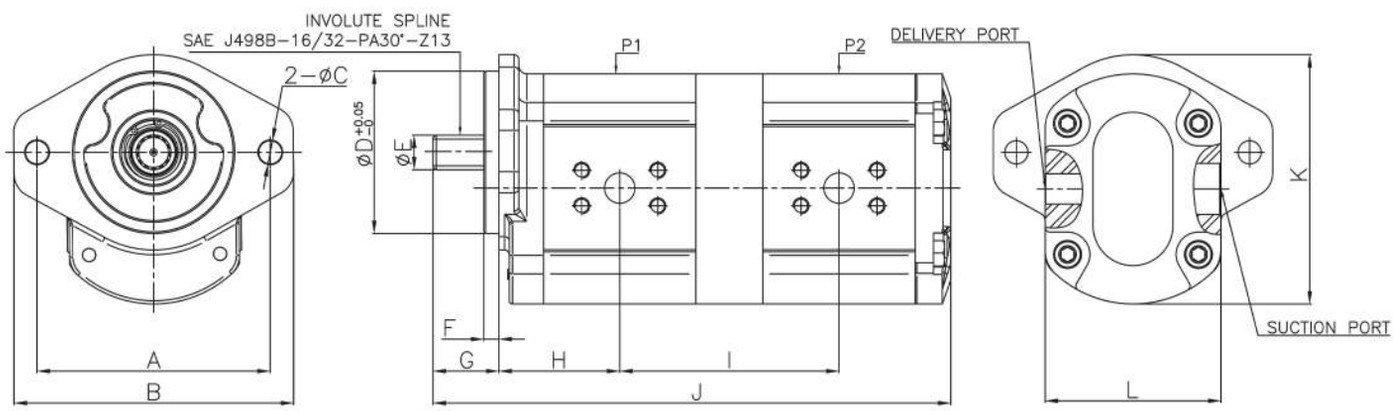

DIMENSIONS

(mm)

MODEL	A	B	C	D	E	F	G	H	I	J	K	L
HGP32/32	146	175	14.5	101.6	21.8	9.4	41.2	75.65	137.3	324.1	156	110
HGP22/22								72.5	131	311.5		

HGP32/22-A(4-PORT) TYPE DOUBLE TYPE GEAR PUMP



※USABLE CIRCUMSTANCE
50℃, ISO VG46, -20~90℃

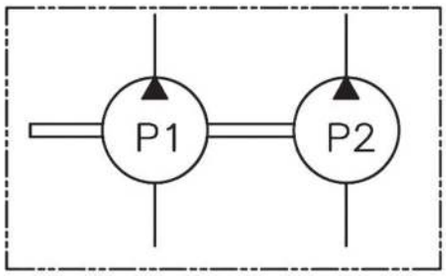

SPECIFICATIONS

MODEL	HGP32/22 A-TYPE	
Discharge Rate (cc/rev)	P1	P2
	32	22
Max. pressure (kg/cm²)	250	
Max. Speed (rpm)	2800	

Flange Mounting face for Suction Port

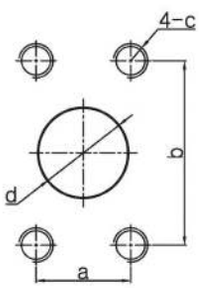

(mm)

a	26.2
b	52.4
c	M10×1.5P Dp20
d	Ø25.5

Flange Mounting face for Delivery Port

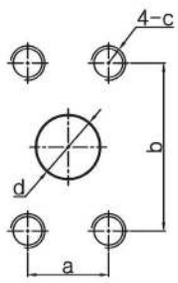

(mm)

a	22.2
b	47.6
c	M10×1.5P Dp20
d	Ø18

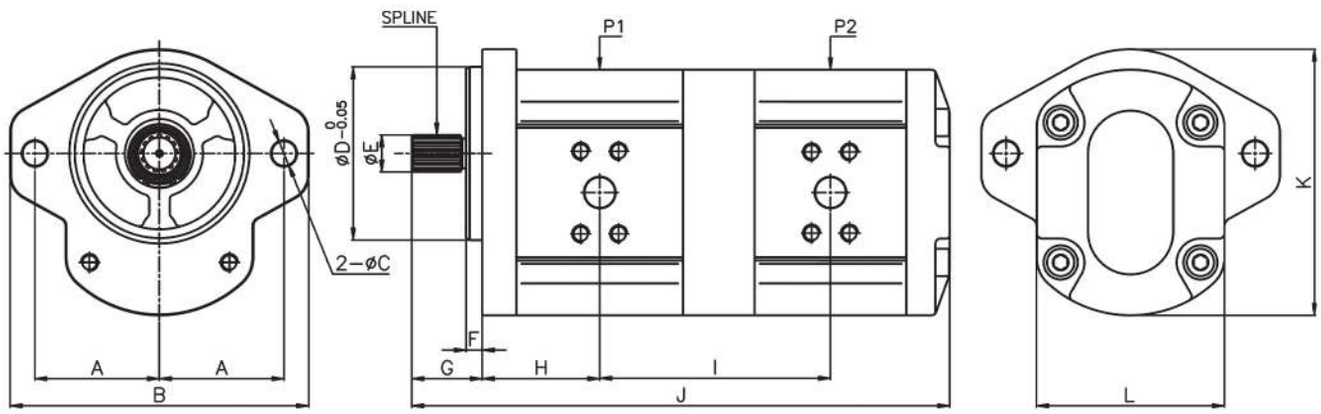

DIMENSIONS

(mm)

MODEL	A	B	C	D	E	F	G	H	I	J	K	L	SPLINE
HGP32/22 (A -TYPE)	73	175	14.5	101.6	21.8	9.4	41.2	68.9	135.3	315.4	156	110	Z13

HGP32/22-B(3-PORT) TYPE
DOUBLE TYPE GEAR PUMP



※USABLE CIRCUMSTANCE
50℃, ISO VG46, -20~90℃

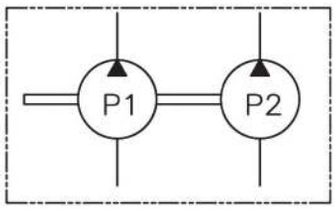

SPECIFICATIONS

MODEL	HGP32/22 B-TYPE	
Discharge Rate (cc/rev)	P1	P2
	32	22
Max. pressure (kg/cm²)	250	
Max. Speed (rpm)	2800	

Flange Mounting face for Suction Port

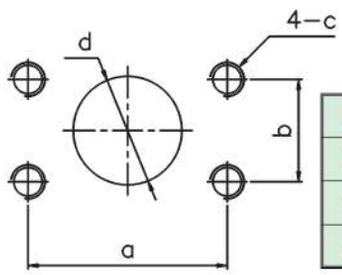

P1 (mm)

a	58.7
b	30.2
c	M10X1.5P Dp20
d	Ø32

Flange Mounting face for Delivery Port

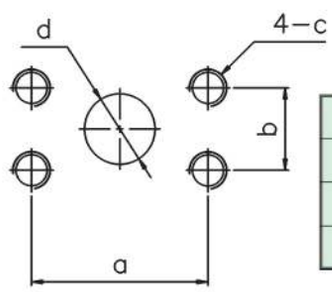

(P1 & P2) (mm)

a	47.6
b	22.2
c	M10X1.5P Dp20
d	Ø19

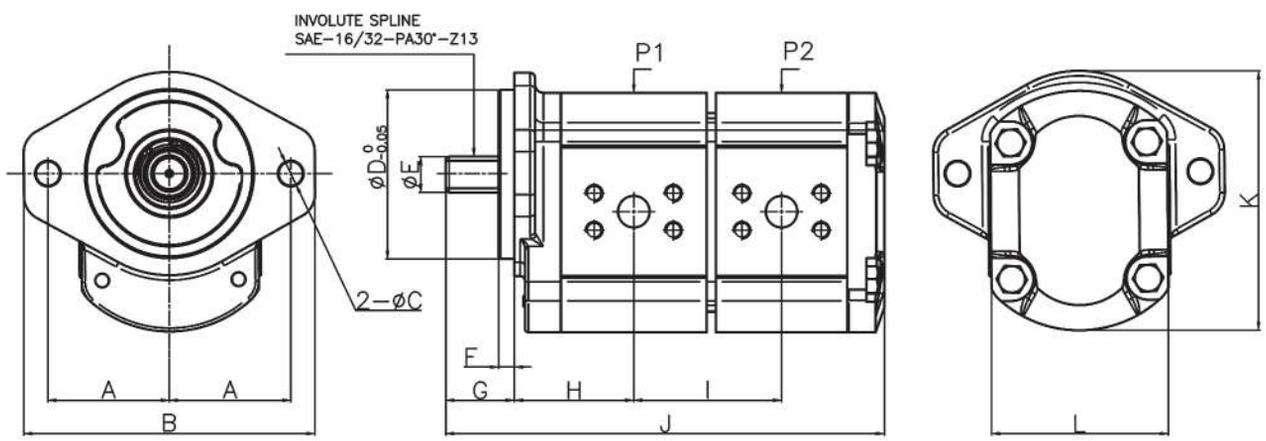

DIMENSIONS

(mm)

MODEL	A	B	C	D	E	F	G	H	I	J	K	L
HGP32/22 (B-TYPE)	73	175	14.5	101.6	22.9	9.4	41.2	71.85	88.85	263.7	156	106.4

HGP66-66-16.3(DH05W-UH045W/UHO52) TANDEM(SERIAL) TYPE GEAR PUMP



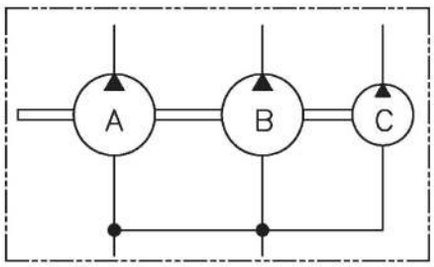

SPECIFICATIONS

MODEL	Ⓐ	Ⓑ	Ⓒ
Discharge Rate (cc/rev)	66		16.3
Max. Pressure (kg/cm²)	175		
Max. Speed (rpm)	1632		

Flange Mounting face for Suction Port

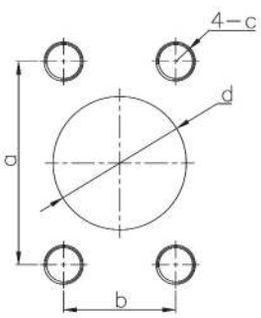

(mm)

a	77.8
b	42.9
c	M14X2.0P Dp30
d	Ø51

Flange Mounting face for Delivery Port

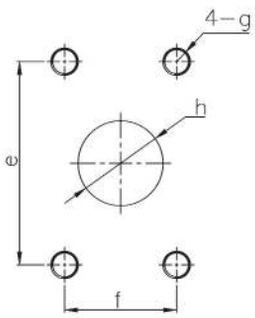

(mm)

e	58.7
f	30.2
g	M12X1.75P Dp30
h	Ø32.5

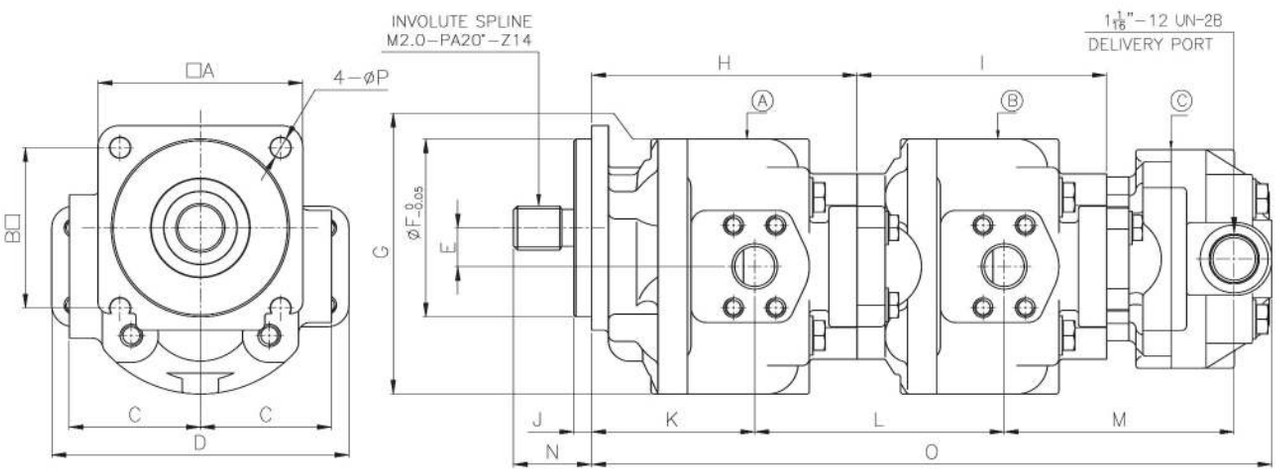

DIMENSIONS

(mm)

MODEL	A	B	C	D	E	F	G	H	I	J	K	L	M	N	O
HGP 66-66-16.3	146	114.5	93.5	212	27.5	127	182	189.4	178	12.6	116.4	178	164	55.8	485.4

HGP32/HGP22
SINGLE TYPE GEAR PUMPS

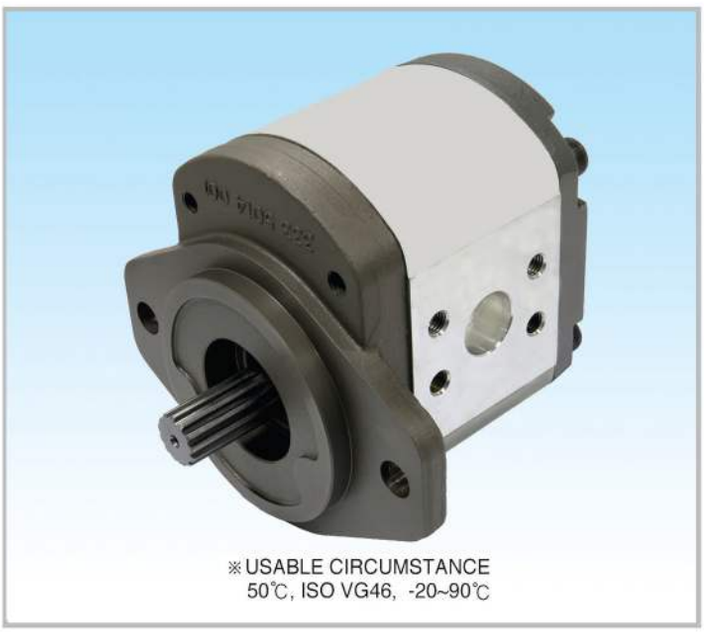

※USABLE CIRCUMSTANCE
50℃, ISO VG46, -20~90℃

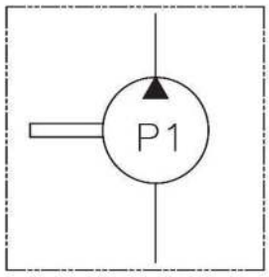

SPECIFICATIONS

MODEL	HGP32	HGP22
Discharge Rate (cc/rev)	32	22
Max. pressure (kg/cm²)	250	
Max. Speed (rpm)	2800	

Flange Mounting face for Suction Port

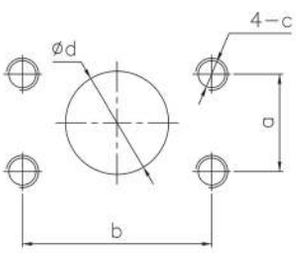

(mm)

	HGP32	HGP22
a	58.7	30.2
b	52.4	26.2
c	M10X1.5PXDp20	
d	Ø32	Ø25.4

Flange Mounting face for Delivery Port

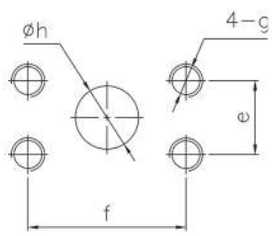

(mm)

HGP32&HGP22	
e	22.2
f	47.6
g	M10X1.5PXDp20
h	Ø19

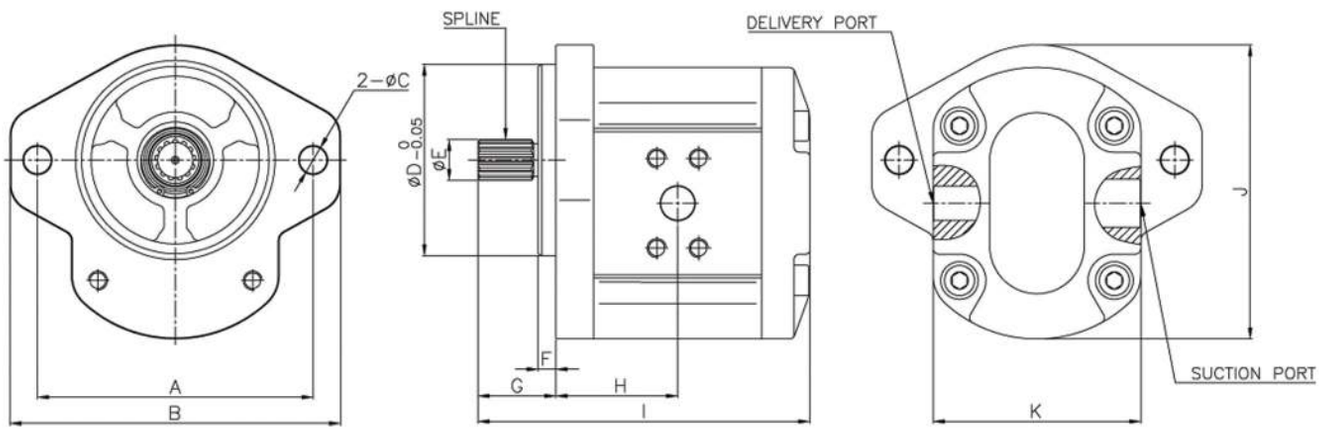

DIMENSIONS

(mm)

MODEL	A	B	C	D	E	F	G	H	I	J	K	SPLINE
HGP22	146	175	14.5	101.6	21.8	9.4	41.2	67.5	174	156	110	Z13
HGP32								71.85	177			

HGP10
SINGLE TYPE GEAR PUMP



※USABLE CIRCUMSTANCE
50℃, ISO VG46, -20~90℃

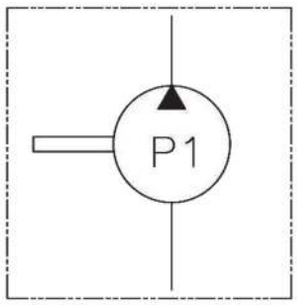

SPECIFICATIONS

MODEL	HGP10
Discharge Rate (cc/rev)	10
Max. Pressure (kg/cm²)	180
Max. Speed (rpm)	2000

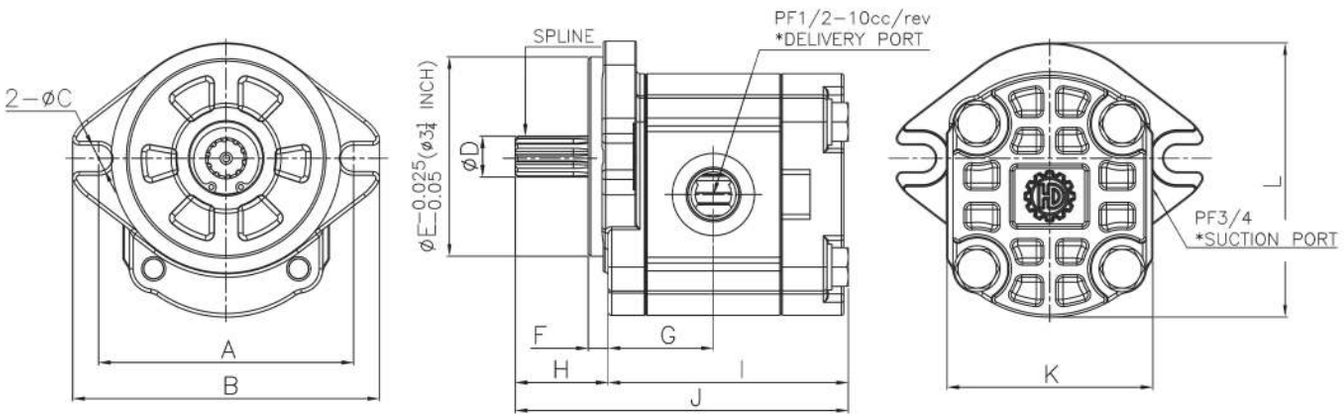

DIMENSIONS

(mm)

MODEL	A	B	C	D	E	F	G	H	I	J	K	L	SPLINE
HGP10	106	127	11	17	82.55	6.2	45.6	36.4	99.5	138	85.4	114.3	Z10

HGP16.8/10
DOUBLE TYPE GEAR PUMP



※USABLE CIRCUMSTANCE
50℃, ISO VG46, -20~90℃

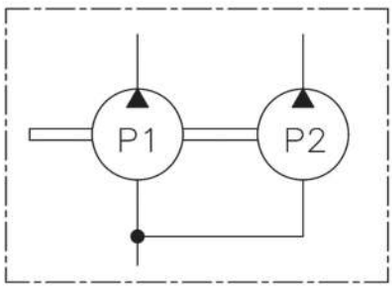

SPECIFICATIONS

MODEL	HGP16.8/10	
Discharge Rate (cc/rev)	P1	P2
	16.8	10
Max. pressure (kg/cm²)	180	
Max. Speed (rpm)	2000	

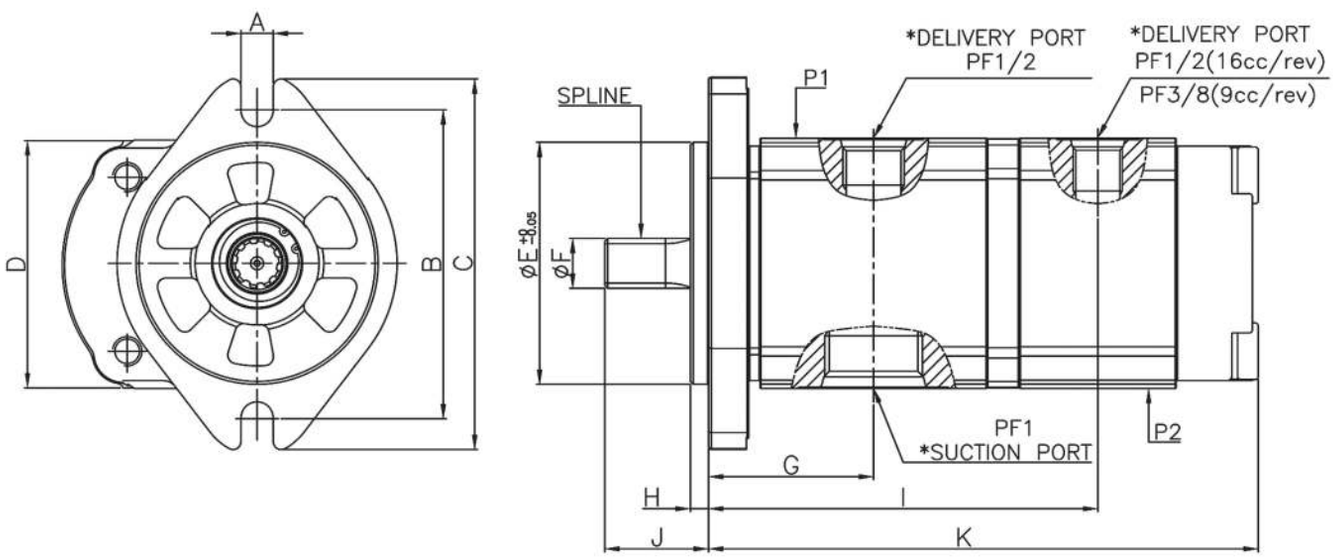

DIMENSIONS

(mm)

MODEL	A	B	C	D	E	F	G	H	I	J	K	SPLINE
HGP16.8/10	11	106	127.0	85	82.55	17	47.6	6.2	121.6	35.3	213	Z10

HGP16.8 FOR VOLVO / HYUNDAI
SINGLE TYPE GEAR PUMP(WITH RELIEF VALVE TYPE)



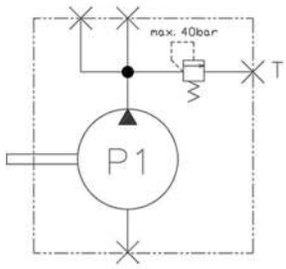

SPECIFICATIONS

MODEL	HGP16.8
Discharge Rate (cc/rev)	16.8
Max. Pressure (kg/cm²)	40
Max. Speed (rpm)	2000
DIRECTION	CCW(L)

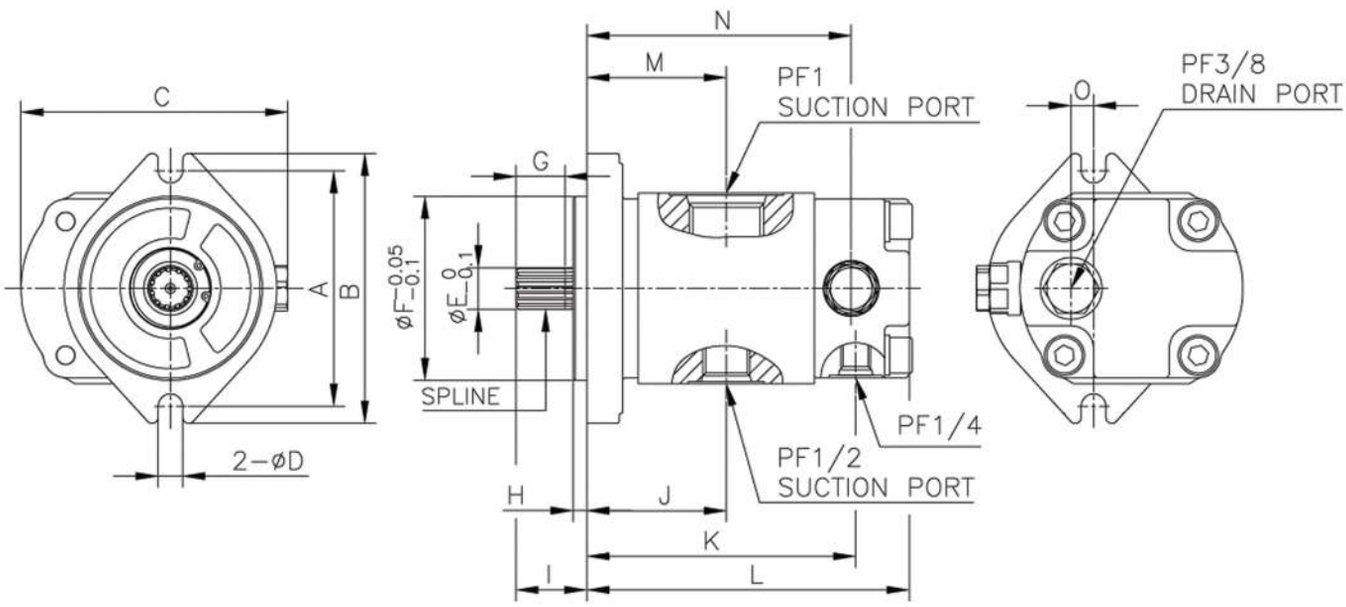

DIMENSIONS

(mm)

MODEL	A	B	C	D	E	F	G	H	I	J	K	L	M	N	O	SPLINE
HGP16.8	105.5	121	119.5	11	18.6	82.55	22	6.2	31.8	62.5	120.5	144.5	62.5	118.5	10	Z11

HGP22
SINGLE TYPE GEAR PUMP(WITH RELIEF VALVE TYPE)

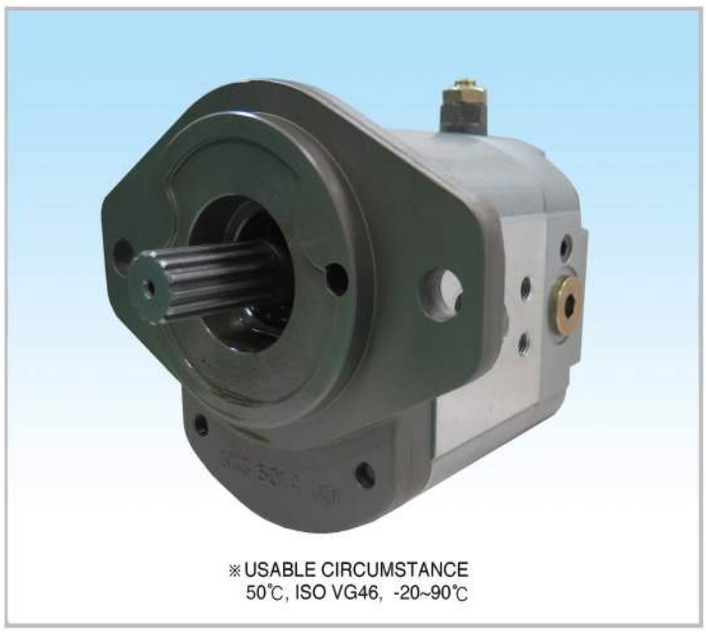

※USABLE CIRCUMSTANCE
50℃, ISO VG46, -20~90℃

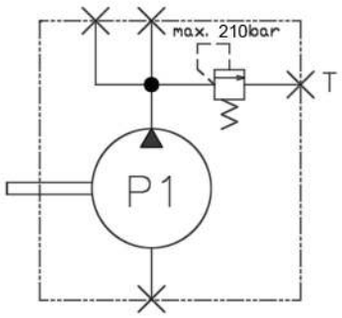

SPECIFICATIONS

MODEL	HGP22(WITH RELIEF VALVE)
Discharge Rate(cc/rev)	22
Max.Pressure(kg/cm²)	210
Max.Speed(rpm)	2200
DIRECTION	CW

Flange Mounting face for Suction Port

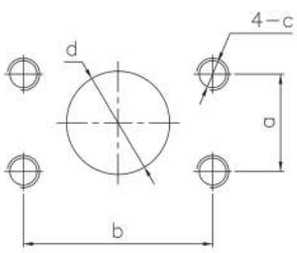

(mm)

a	26.2
b	52.4
c	M10X1.5PXDp20
d	Ø25.4

Flange Mounting face for Delivery Port

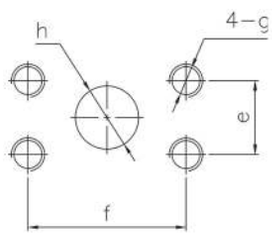

(mm)

e	22.2
f	47.6
g	M10X1.5PXDp20
h	Ø19

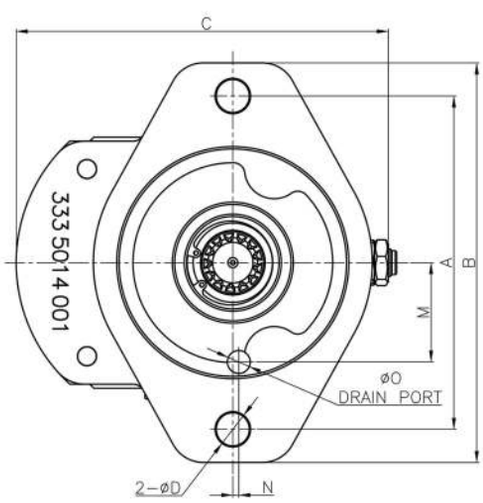

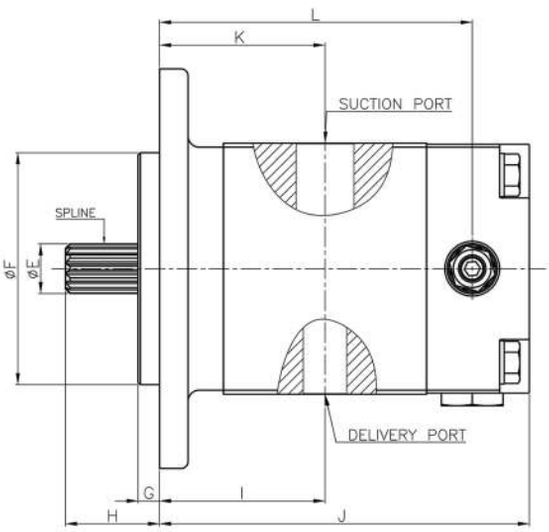

DIMENSIONS

(mm)

MODEL	A	B	C	D	E	F	G	H	I	J	K	L	M	N	O	SPLINE
HGP22	146	175	163	15.5	21.8	101.6	9.4	41.2	72.5	162	72.5	137	43.5	2.6	10	Z13

HPC90(EATON54) TROCHOID PUMP

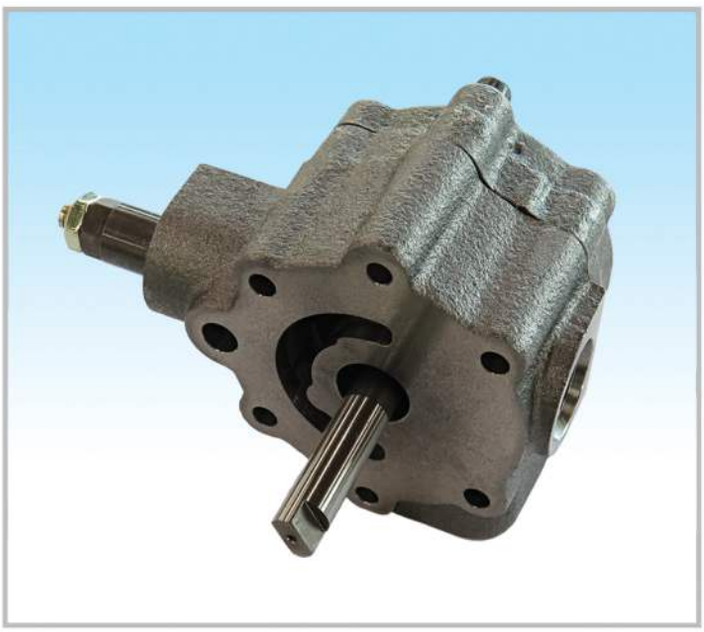

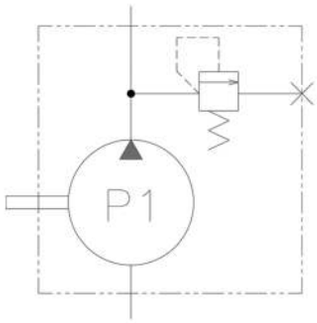

SPECIFICATIONS

MODEL	HPC90	
Discharge Rate(cc/rev)	16.7	
Max. Pressure (kg/cm²)	20	
Max. Speed (rpm)	2000	
DIRECTION	CW(R)	CCW(L)

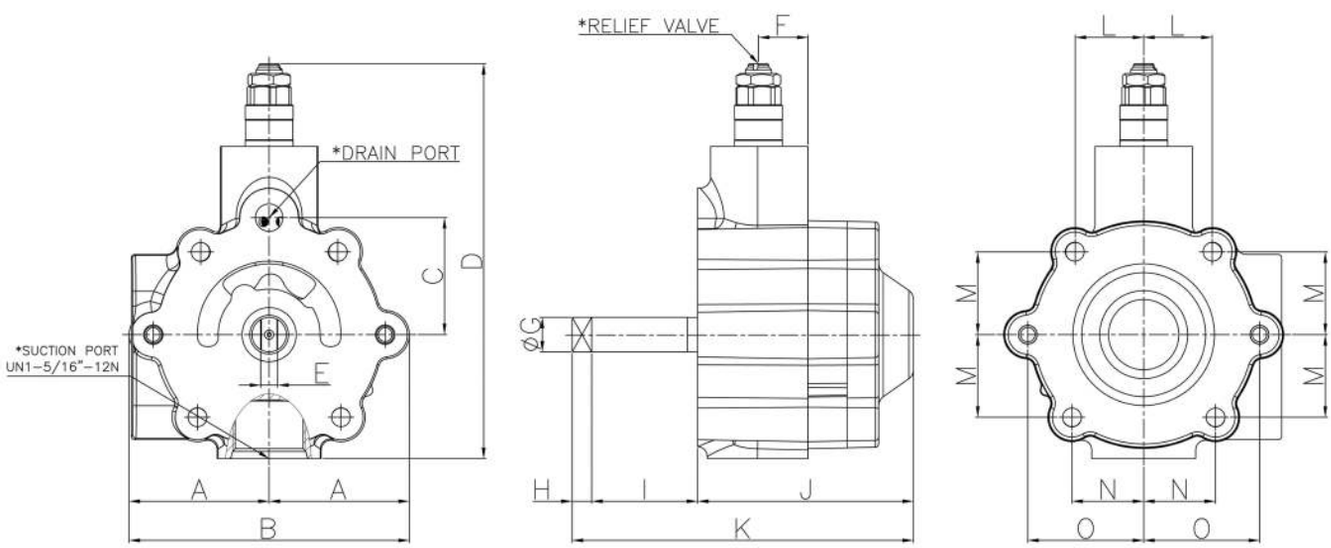

DIMENSIONS

(mm)

MODEL	A	B	C	D	E	F	G	H	I	J	K	L	M	N	O
HPC90 (TROCHOID PUMP)	65	129	74	182	7.8	23	15.875	9	49	99	157	32	38	33	53

H3V SERIES
GEAR PUMPS OF INNER DRAIN TYPE

SPECIFICATIONS

MODEL	H3V63	H3V112	H3V140	H3V180
Discharge Rate (cc/rev)	12		15	
Max. Pressure (kg/cm²)	40			
Max. Speed (rpm)	3250	2700	2500	2200

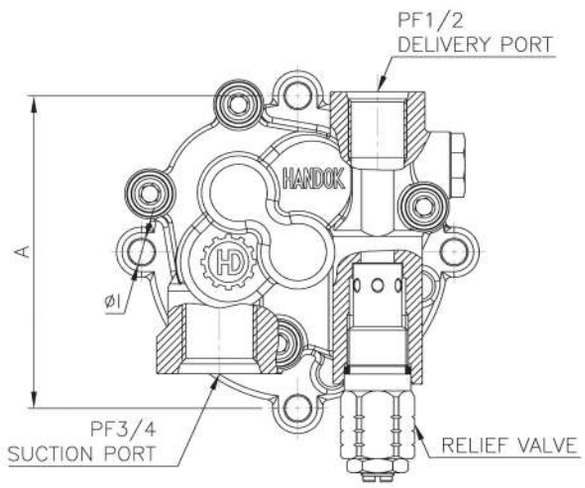

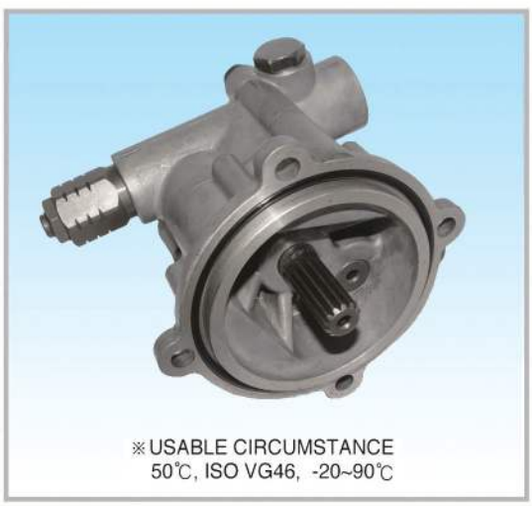

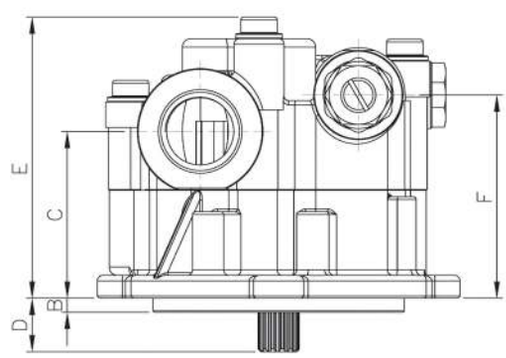

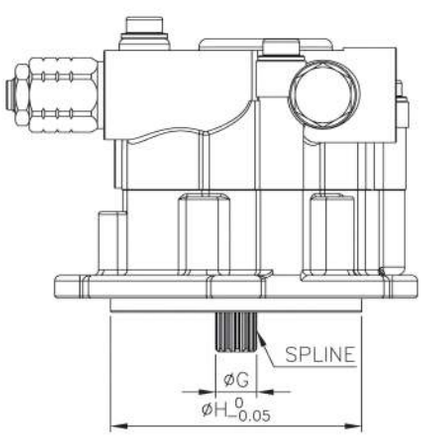

DIMENSIONS

(mm)

MODEL	A	B	C	D	E	F	G	H	I	SPLINE
H3V63	100	5	59.8	19.2	93	72.8	14.8	80	6.6	Z 12 Z 13
H3V112	112							90	9	Z 12 Z 13
H3V140&180	138		62.8	16.2	96	75.8		100	11	Z 12 Z 13

H3V/H5V DTP/DP/DPH SERIES
GEAR PUMPS OF OUTER DRAIN TYPE

SPECIFICATIONS

MODEL	H3V63DTP	H5V80DTP	H5V112DP	H5V200DPH
Discharge Rate (cc/rev)	12		15	
Max. Pressure (kg/cm²)	50			
Max. Speed (rpm)	3250	2700	2500	2200
DIRECTION	CCW(L)			

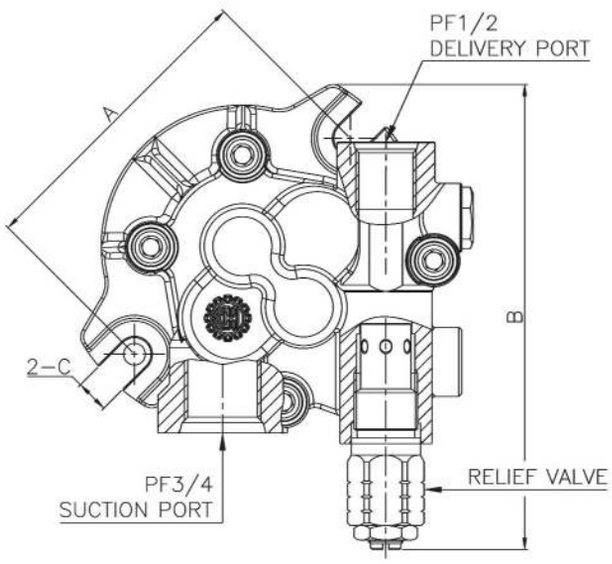



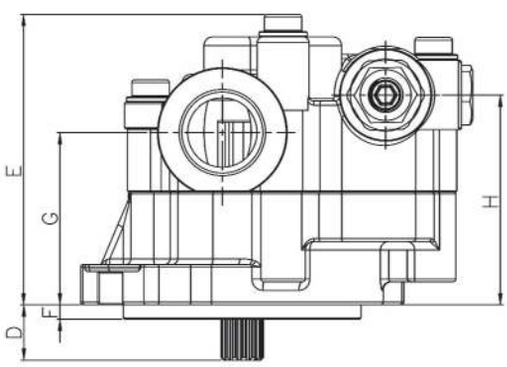

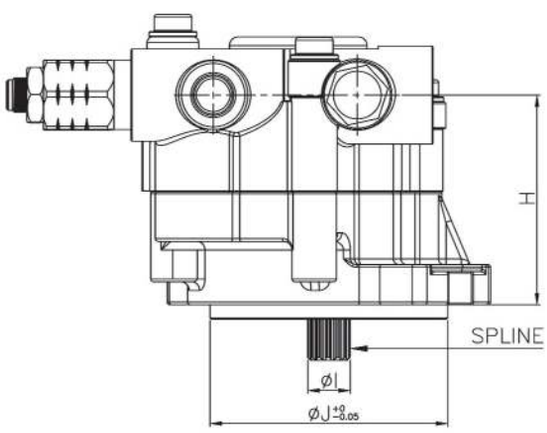

DIMENSIONS

(mm)

MODEL	A	B	C	D	E	F	G	H	I	J	SPLINE
H3V63DTP	106	161	11.5	19.2	100.8	5	59.8	72.8	14.8	82.55	Z13
H5V80DTP											
H5V112DP											
H5V200DPH											

H3V/H5V DTP SERIES
GEAR PUMPS OF INNER DRAIN TYPE

SPECIFICATIONS

MODEL	H3V63DTP	H5V80DTP	H3V112DTP	H5V140DTP
Discharge Rate (cc/rev)	12		15	
Max. Pressure (kg/cm²)	50			
Max. Speed (rpm)	3250	2700	2500	2200

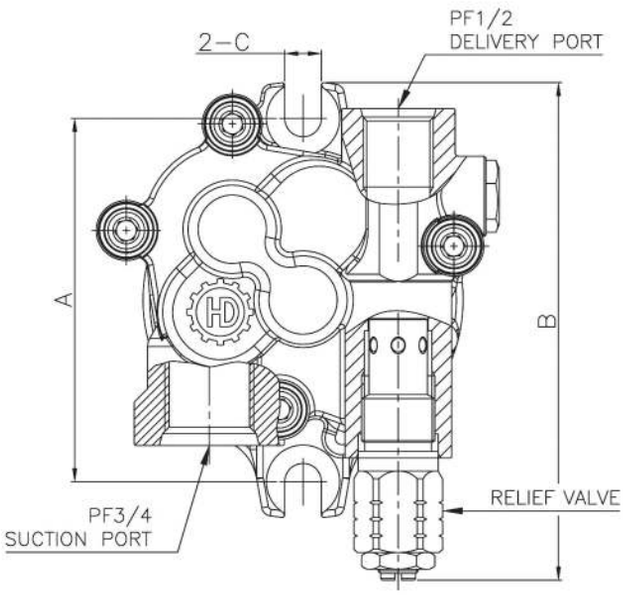



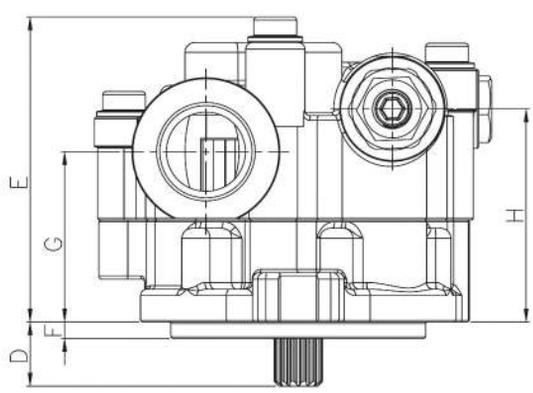

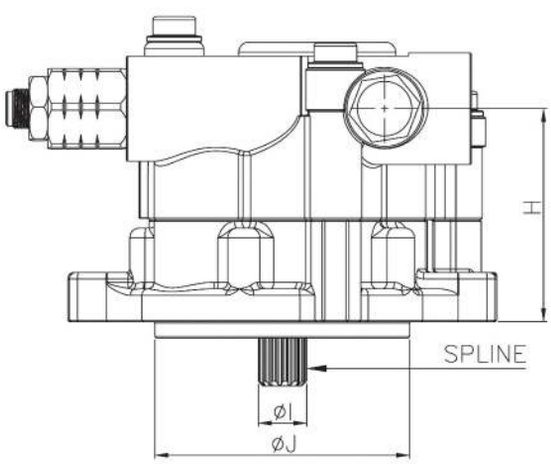

DIMENSIONS

(mm)

MODEL	A	B	C	D	E	F	G	H	I	J	SPLINE
H3V63DTP	109	149	11	27.2	93	5	51.8	64.8	14.8	77.5	Z13
H5V80DTP											
H3V112DTP											
H5V140DTP											

H3V63DTP/112DTP&H5V80DTP/140DTP
DOUBLE TYPE GEAR PUMPS

SPECIFICATIONS

MODEL	H3V63DTP/H5V80DTP	H3V112DTP/H5V140DTP
Discharge Rate (cc/rev)	P1	P2
	23	10/16
Max. Pressure (kg/cm²)	180	
Max. Speed (rpm)	3200	
DIRECTION	CCW(L)	CW(R)

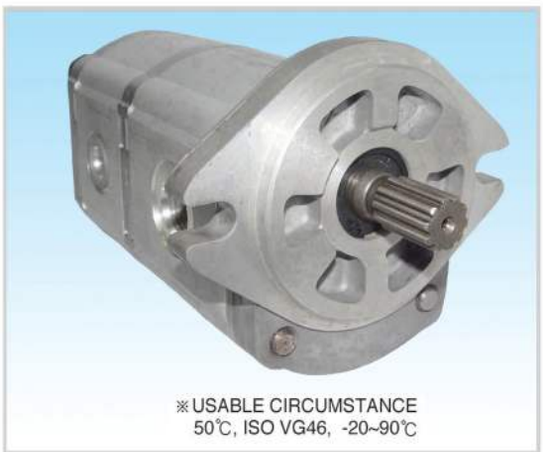

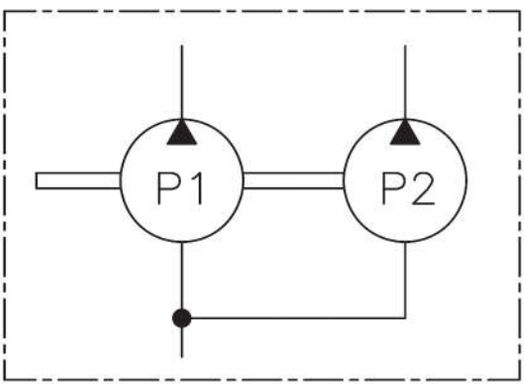

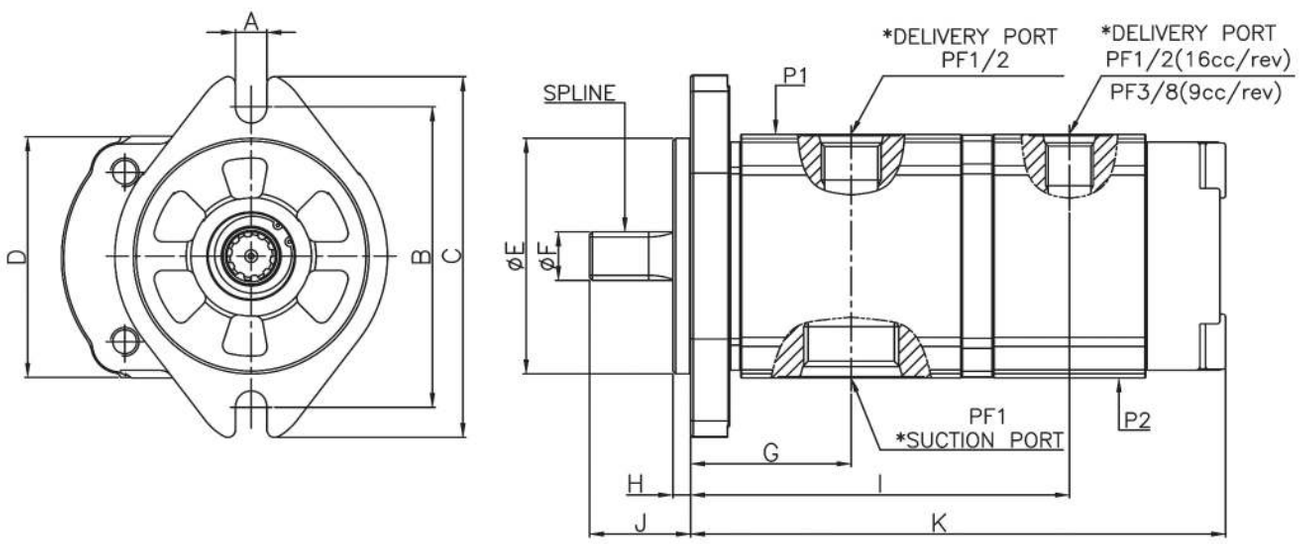

DIMENSIONS

(mm)

MODEL	A	B	C	D	E	F	G	H	I	J	K	SPLINE
H3V63DTP	11	106	127	85	82.55	17	56.3	6.2	134.1	35.4	190	Z10
H3V112DTP												
H5V80DTP									138.7		199.5	
H5V140DTP												

H3V/H5V DTP SERIES
GEAR PUMPS OF OUTER DRAIN TYPE

SPECIFICATIONS

MODEL	H3V63DTP	H5V80DTP	H3V112DTP	H5V140DTP
Discharge Rate (cc/rev)	12		15	
Max. Pressure (kg/cm²)	50			
Max. Speed(rpm)	3250	2700	2500	2200

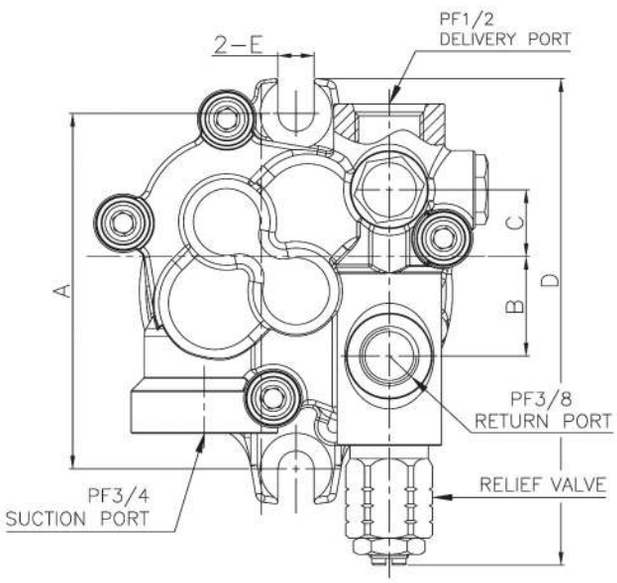



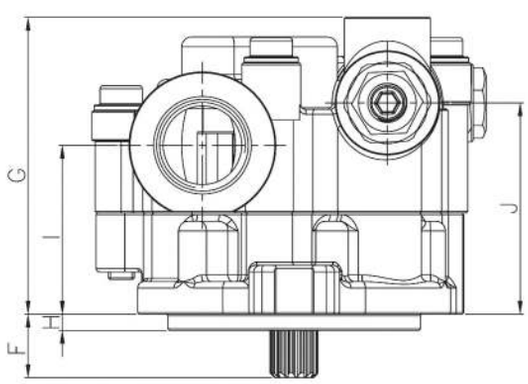

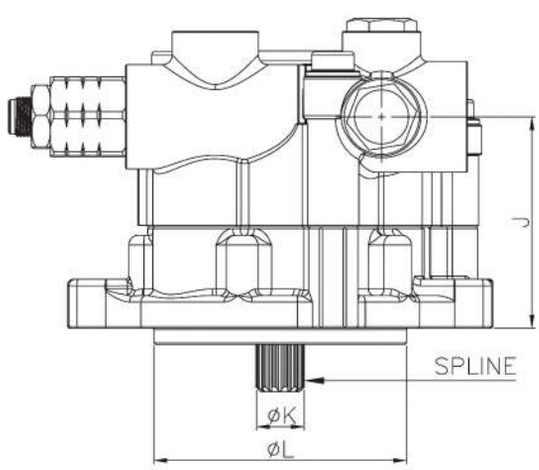

DIMENSIONS

(mm)

MODEL	A	B	C	D	E	F	G	H	I	J	K	L	SPLINE
H3V63DTP	109	30.5	20.5	149	11	27.2	61	5	51.8	64.8	14.8	77.5	Z13
H5V80DTP													
H3V112DTP													
H5V140DTP													

H5V160DP FOR CATERPILLAR
SINGLE TYPE GEAR PUMP



※USABLE CIRCUMSTANCE
50℃, ISO VG46, -20~90℃

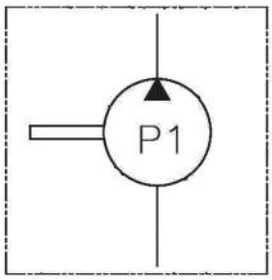

SPECIFICATIONS

MODEL	H5V160DP
Discharge Rate(cc/rev)	25
Max.pressure	40
Max.speed(rpm	2000

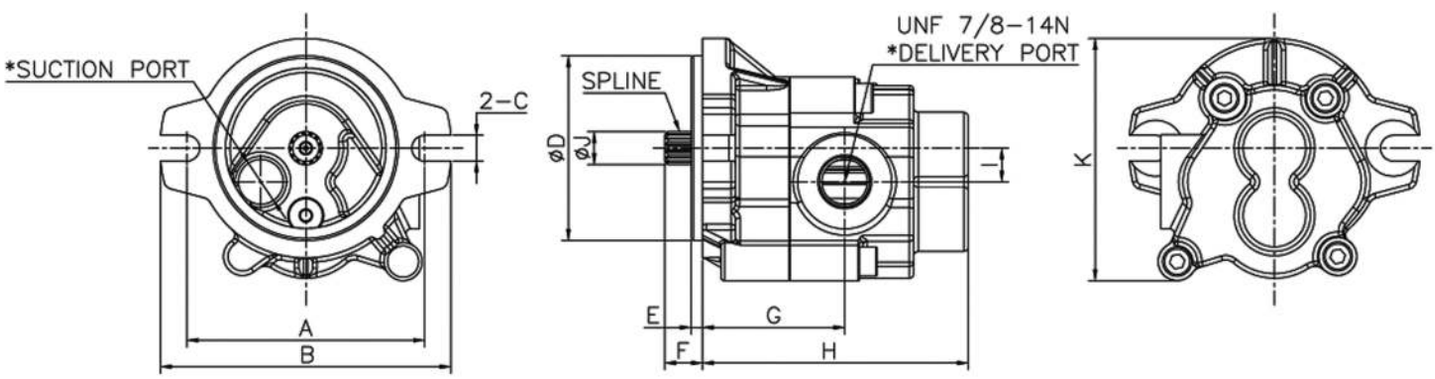

DIMENSIONS

(mm)

MODEL	A	B	C	D	E	F	G	H	I	J	K	SPLINE
H5V160DP	106	130	12	83	5	17	64	119	15	15	108	Z13

H5V200/212DPH
GEAR PUMP OF OUTER DRAIN TYPE



※USABLE CIRCUMSTANCE
50℃, ISO VG46, -20~90℃

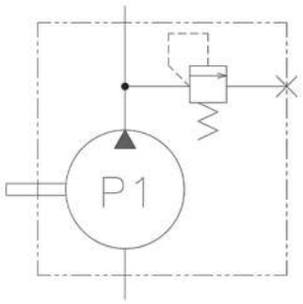

SPECIFICATIONS

MODEL	H5V200/212DPH
Discharge Rate (cc/rev)	15
Max. Pressure (kg/cm²)	40
Max. Speed (rpm)	2200

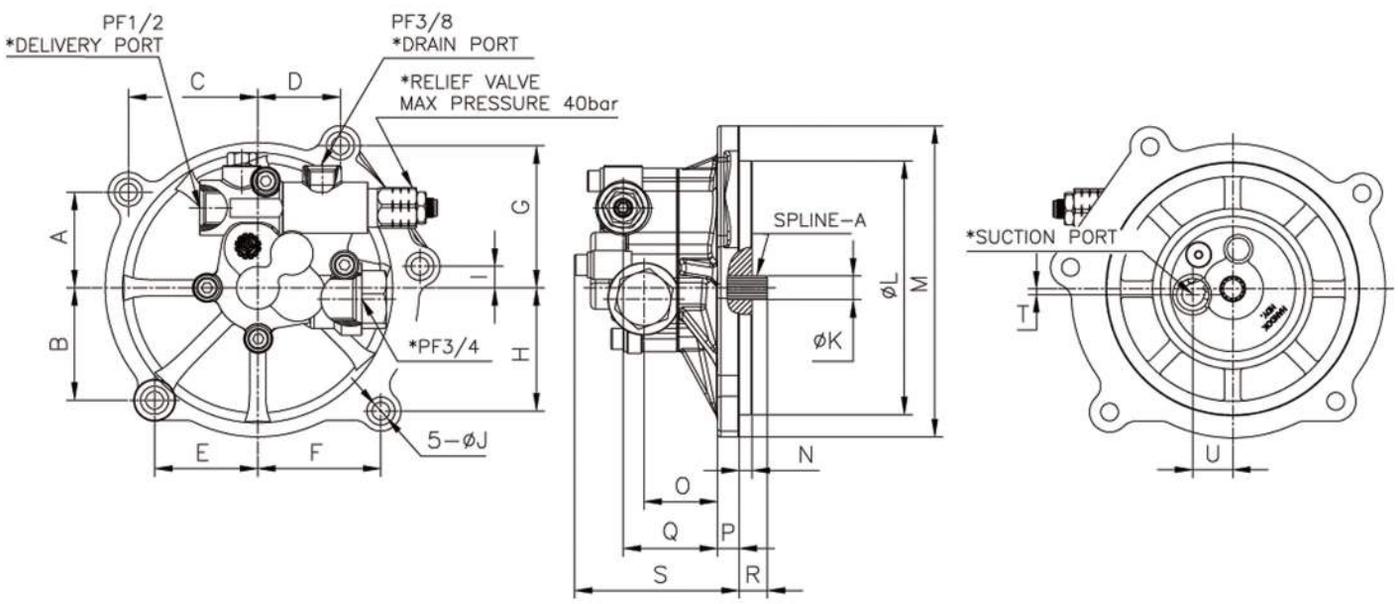

DIMENSIONS

(mm)

MODEL	A	B	C	D	E	F	G	H	I	J	K	L	M	N	O	P	Q	R	S	T	U	SPLINE
H5V200/212 DPH	59.5	70	80.5	51.5	64.2	76.7	88.5	76.7	13.4	11	14.8	158	193.8	8	45.8	13.5	58.8	17.5	102.5	3.6	24.8	Z13

H7V63/100/125/140/180/200DTP
GEAR PUMPS OF INNER DRAIN TYPE



※USABLE CIRCUMSTANCE
50℃, ISO VG46, -20~90℃

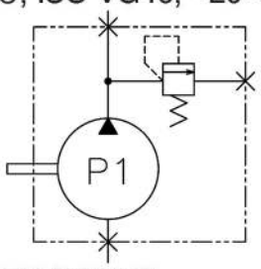

SPECIFICATIONS

MODEL	H7V63/100/125/140/180/200DTP
Discharge Rate(cc/rev)	15
Max.Pressure(kg/cm²)	50
Max.Speed(rpm)	2700

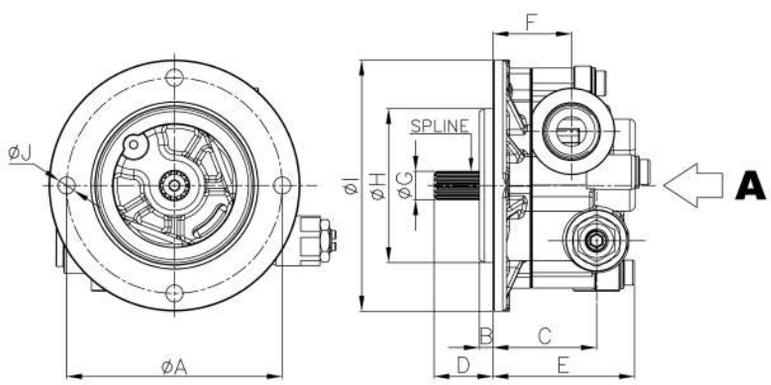

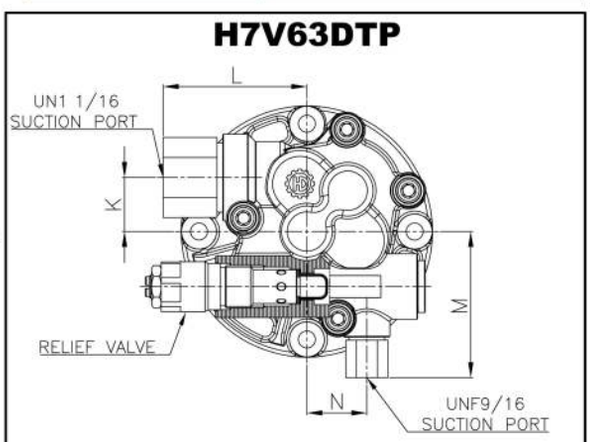

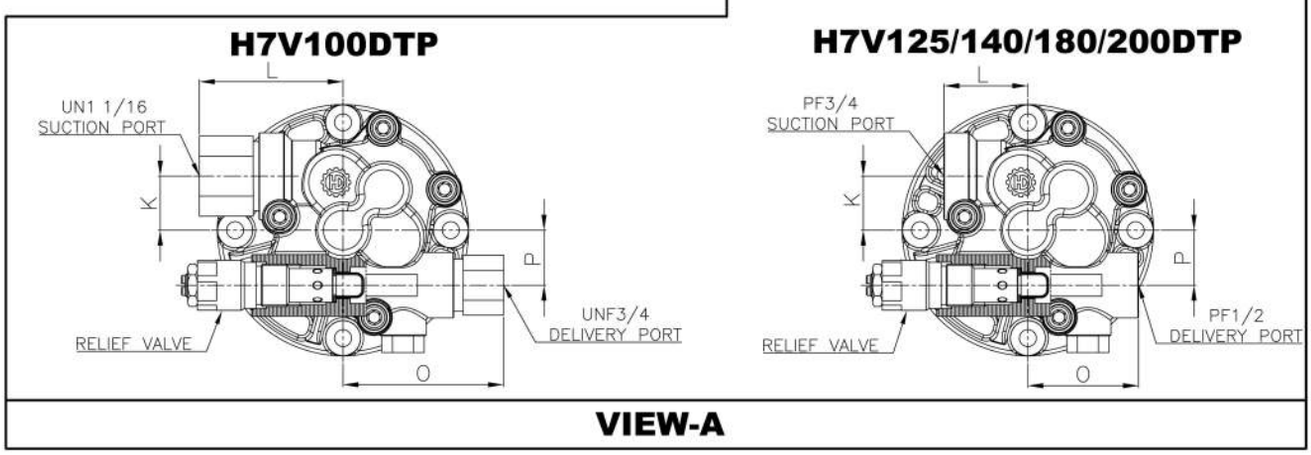

DIMENSIONS

(mm)

MODEL	A	B	C	D	E	F	G	H	I	J	K	L	M	N	O	P	SPLINE
H7V63DTP	112	7	54	31	73.5	41	14.8	80	130.5	9	28	75	76	31	-	-	Z13
H7V100DTP						45							-	-	84	29	
H7V125DTP	124	5						100	142.5			44			58		
H7V140DTP																	
H7V180DTP	138							110	156								
H7V200DTP																	

H7V63/100/125/140/180/200DTP
GEAR PUMPS OF OUTER DRAIN TYPE



※USABLE CIRCUMSTANCE
50℃, ISO VG46, -20~90℃

※USABLE CIRCUMSTANCE
50℃, ISO VG46, -20~90℃

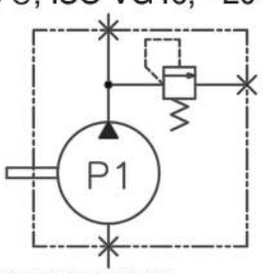

SPECIFICATIONS

MODEL	H7V63/100/125/140/180/200DTP
Discharge Rate(cc/rev)	15
Max.Pressure(kg/cm²)	50
Max.Speed(rpm)	2700

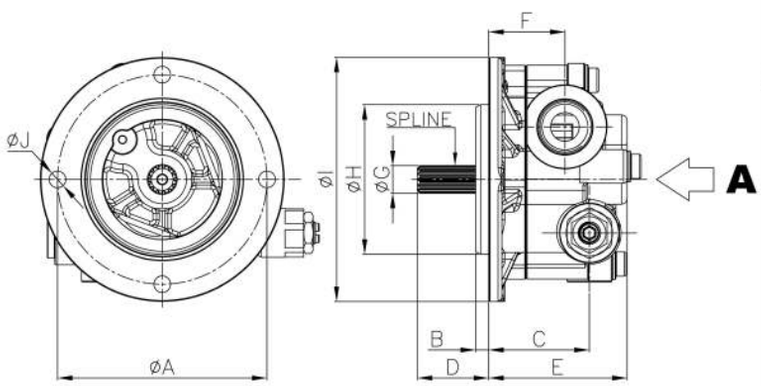

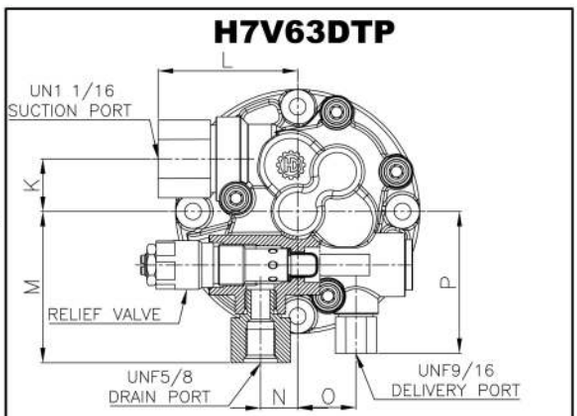

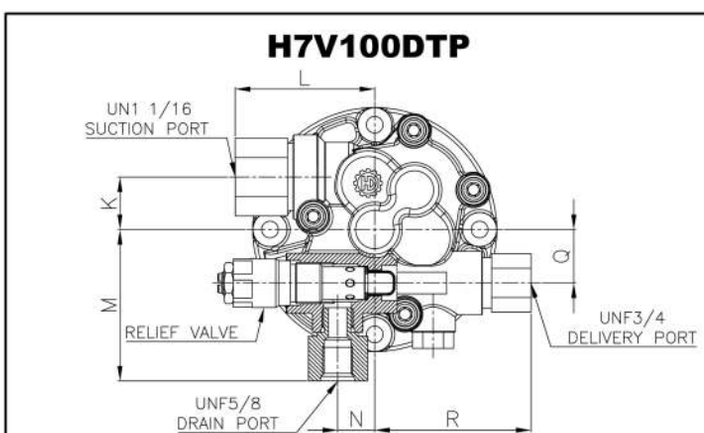

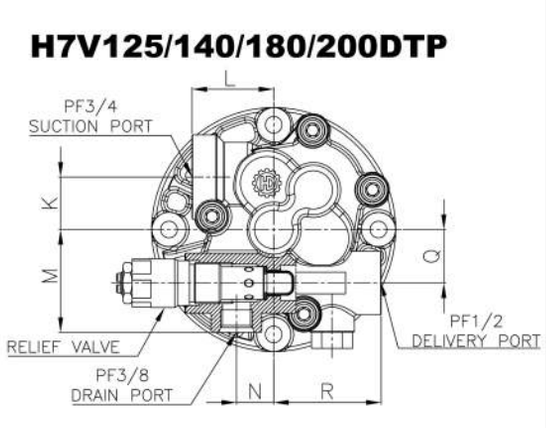

VIEW-A

DIMENSIONS

(mm)

MODEL	A	B	C	D	E	F	G	H	I	J	K	L	M	N	O	P	Q	R	SPLINE
H7V63DTP	112	7	54	31	73.5	41	14.8	80	130.5	9	28	75	81	20	31	76	-	-	Z13
H7V100DTP						45									-	-	29	84	
H7V125DTP	124	5						100	142.5			44	55					58	
H7V140DTP																			
H7V180DTP	138							110	156										
H7V200DTP																			

HGP16.8(CCW-L)
SINGLE TYPE GEAR PUMP(FOR 4-BOLT FITTINGS)

SPECIFICATIONS

MODEL	HPV125A	HPV125B	KVC925
Discharge Rate (cc/rev)	16.8		
Max. Pressure (kg/cm²)	180		
Max. Speed (rpm)	3200		
DIRECTION	CCW(L)		

Flange Mounting face for Suction Port

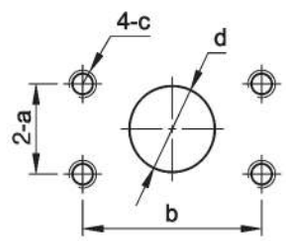

(mm)

a	26.2
b	52.4
c	3/8-16 UNC
d	Ø25



Flange Mounting face for Delivery Port

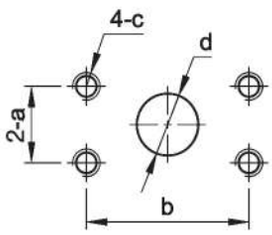

(mm)

a	22.2
b	47.6
c	3/8-16 UNC
d	Ø18

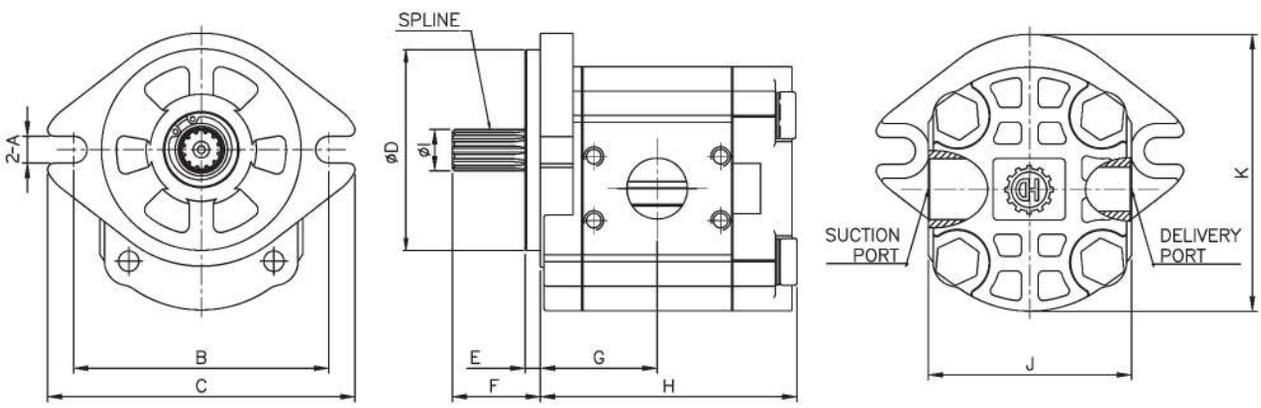

DIMENSIONS

(mm)

MODEL	A	B	C	D	E	F	G	H	I	J	K	SPLINE
HGP16.8 (CCW-L)	11	105.5	127	82.55	6.2	36.3	50.4	109	17	84	113.5	Z10

HGP16.8(CCW-L, CW-R)
SINGLE TYPE GEAR PUMPS(FOR PIPE FITTINGS)

SPECIFICATIONS

MODEL	HPVO50	HPVO102	HPVO91ES	HPVO91EW	HPV116	HPV145	A7VO250
Discharge Rate (cc/rev)	16.8						
Max. Pressure (kg/cm²)	180						
Max. Speed (rpm)	3200						
DIRECTION	CCW(L)	CCW(L)	CCW(L)	CCW(L)	CW(R)	CW(R)	CW(R)

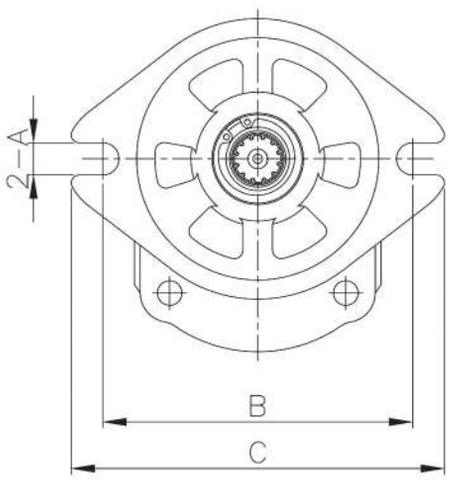



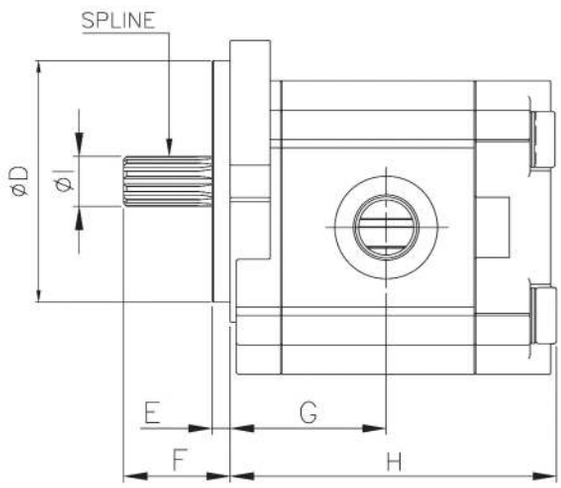

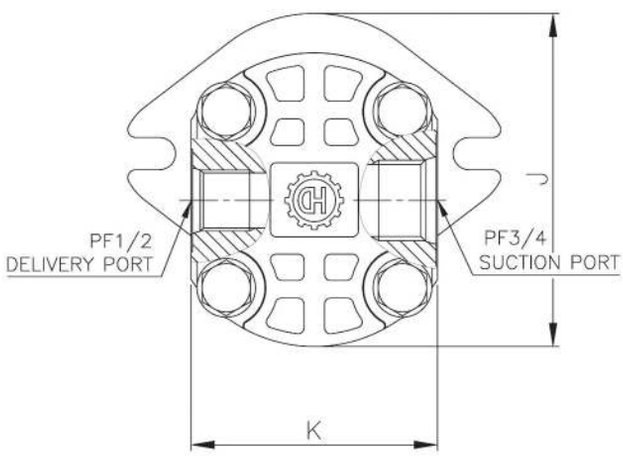

DIMENSIONS

(mm)

MODEL	A	B	C	D	E	F	G	H	I	J	K	SPLINE
HGP16.8 (CCW-L) (CW-R)	11	105.5	127	82.55	6.2	36.3	53	109	17	113.5	84	Z10

LPD45 FOR KOMATSU
SINGLE TYPE GEAR PUMP

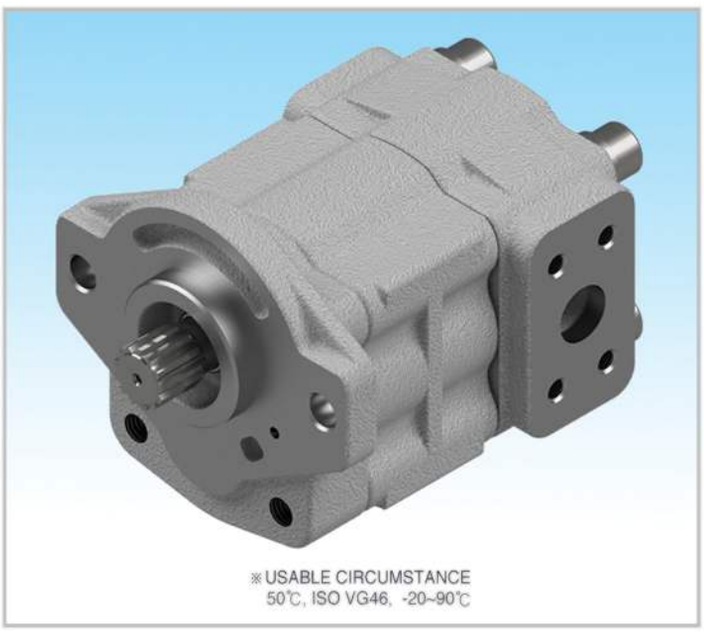

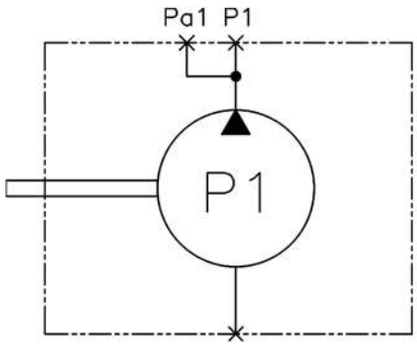

SPECIFICATIONS

MODEL	LPD45 (FOR KOMATSU)
Discharge Rate(cc/rev)	32
Max. Pressure (kg/cm²)	245
Max. Speed (rpm)	3,000
DIRECTION	CW

Flange Mounting face for Suction Port

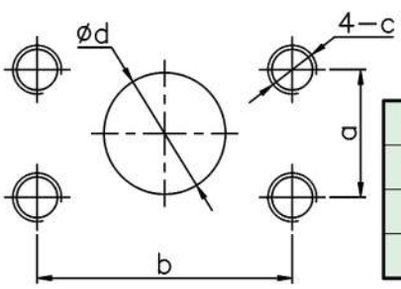

(mm)

a	26.2
b	52.4
c	M8X1.25PXDP14
d	25

Flange Mounting face for Delivery Port

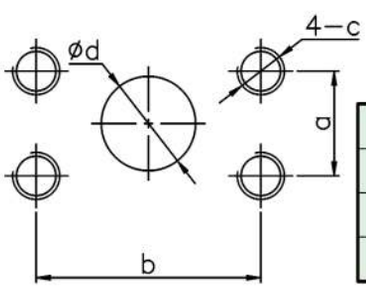

(mm)

a	22.2
b	47.6
c	M8X1.25PXDP14
d	20

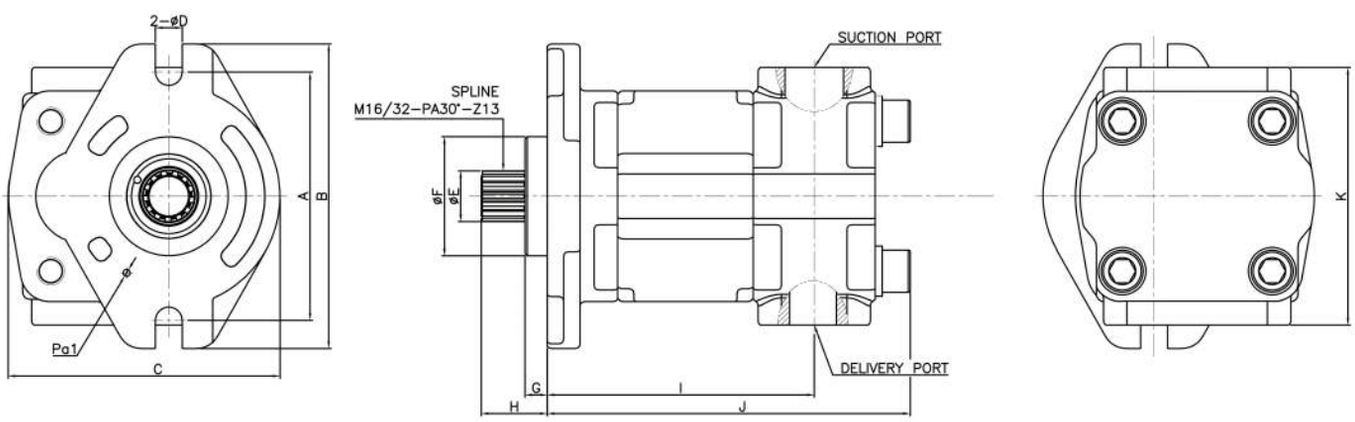

DIMENSIONS

(mm)

MODEL	A	B	C	D	E	F	G	H	I	J	K
LPD45 (FOR KOMATSU)	106	130	116	11.5	21.8	50.8	9.5	28	114	155	110

LPD45 FOR KOMATSU
DOUBLE TYPE GEAR PUMP

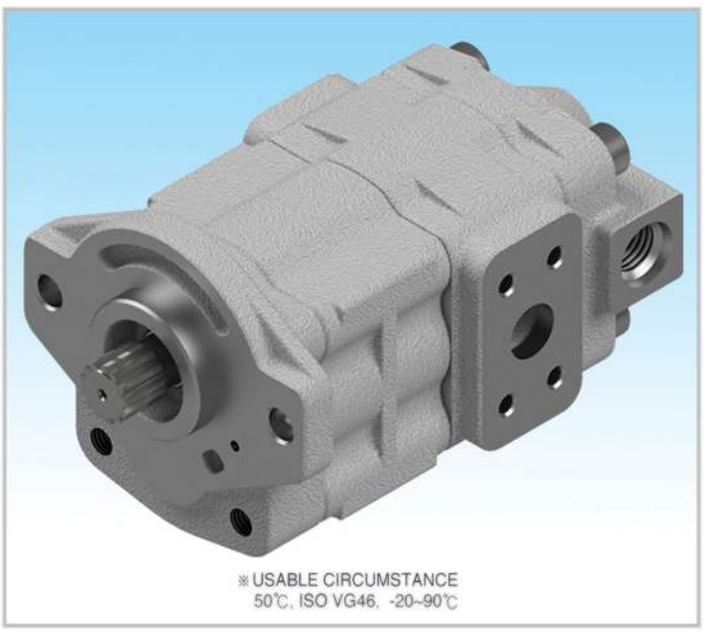

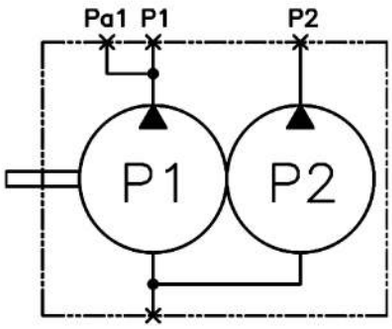

SPECIFICATIONS

MODEL	LPD45(FOR KOMATSU)	
Discharge Rate(cc/rev)	32	7
Max. Pressure (kg/cm²)	245	
Max. Speed (rpm)	3,000	
DIRECTION	CW	

Flange Mounting face for Suction Port

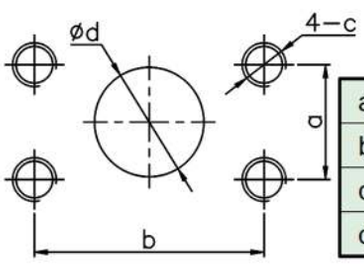

(mm)

a	26.2
b	52.4
c	M8X1.25PXDP14
d	25

Flange Mounting face for Delivery Port

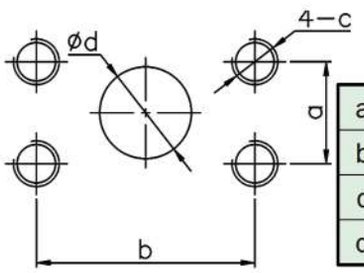

(mm)

a	22.2
b	47.6
c	M8X1.25PXDP14
d	20

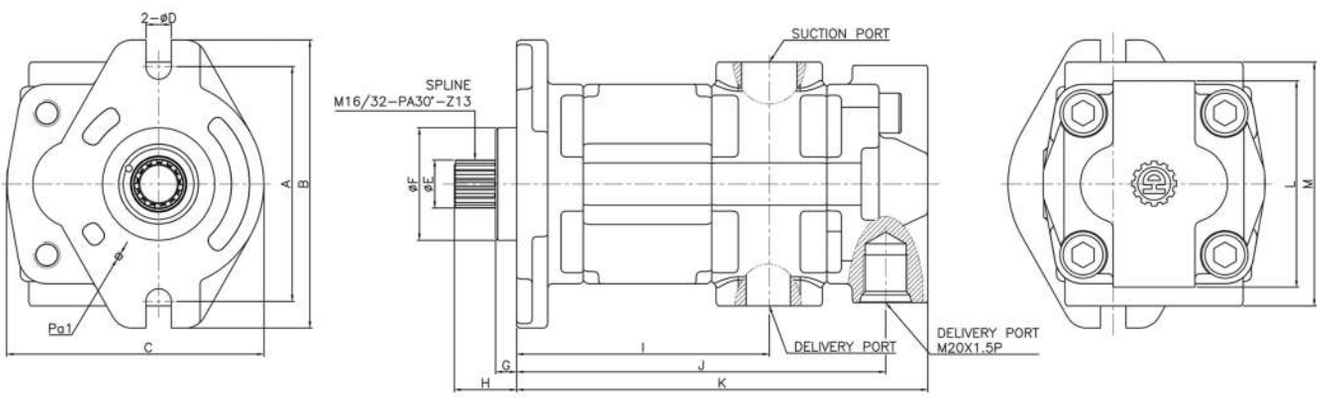

DIMENSIONS

(mm)

MODEL	A	B	C	D	E	F	G	H	I	J	K	L	M
LPD45 (FOR KOMATSU)	106	130	116	11.5	21.8	50.8	9.5	28.3	114	172	190	93	110

PSVD2 SERIES
SINGLE TYPE GEAR PUMPS

SPECIFICATIONS

MODEL	PSVD2-17/21/27		
Discharge Rate (cc/rev)	12	16.8	19.2
Max.Pressure (kg/cm^2)	210		
Max. Speed (rpm)	2400 / 2500 / 2550		



※USABLE CIRCUMSTANCE
50℃, ISO VG46, -20~90℃

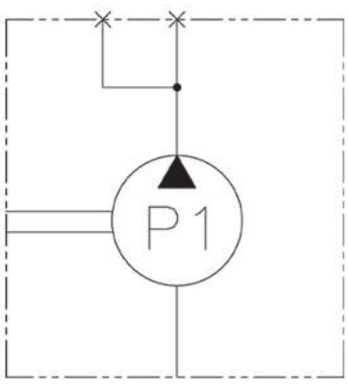

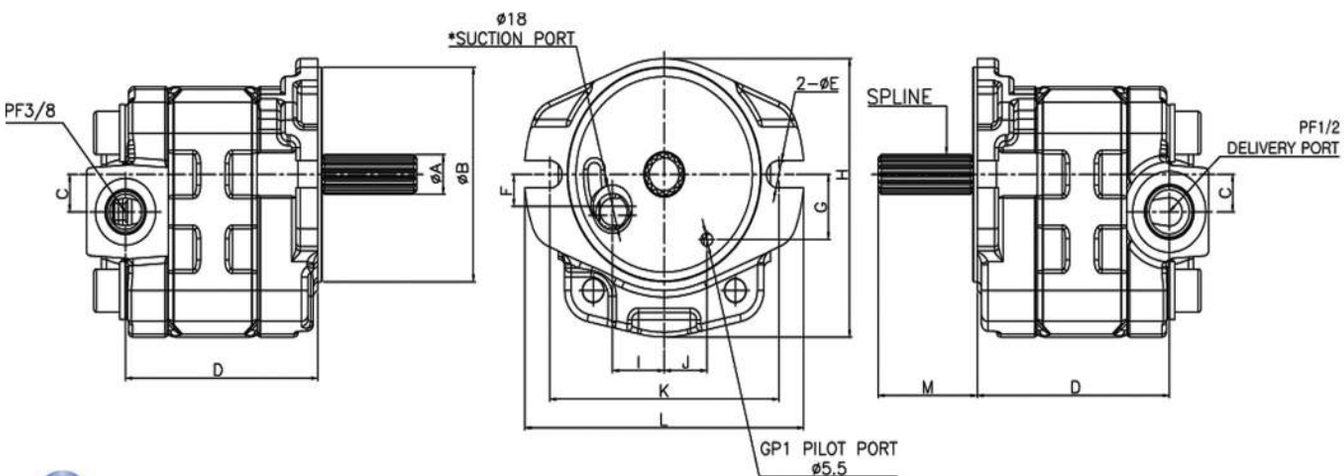

DIMENSIONS

(mm)

MODEL	A	B	C	D	E	F	G	H	I	J	K	L	M	SPLINE
PSVD2-17	17	90	15.7	76.1	11.5	13.5	27.3	117	24	19.8	106	130	46	Z15
PSVD2-21				85.6										
PSVD2-27				89.2										

PSV2-63
SINGLE TYPE GEAR PUMP

SPECIFICATIONS

MODEL	PSV2-63
Discharge Rate (cc/rev)	10
Max. Pressure (kg/cm²)	40
Max. Speed (rpm)	2000

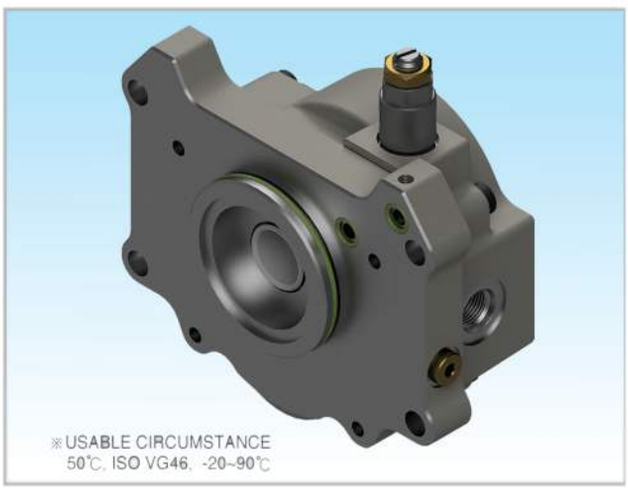

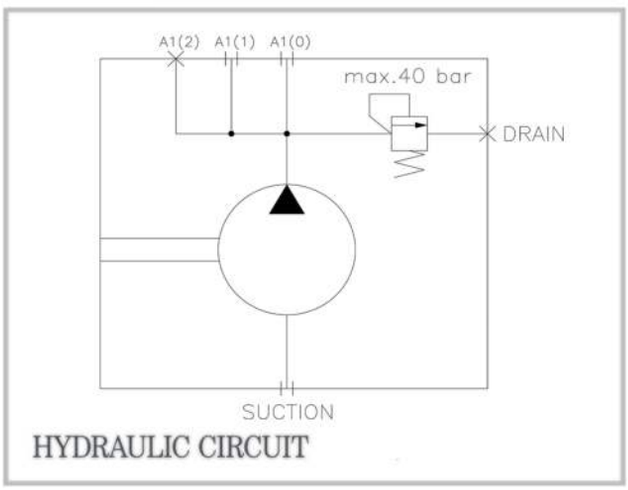

Dimensions of Shaft End(Spline Type)

MODEL	No.of teeth	Pitch circle dia(mm)	Module	Pressure angle	Standard
PSV2-63	10	15.875	0.5	30°	SAE

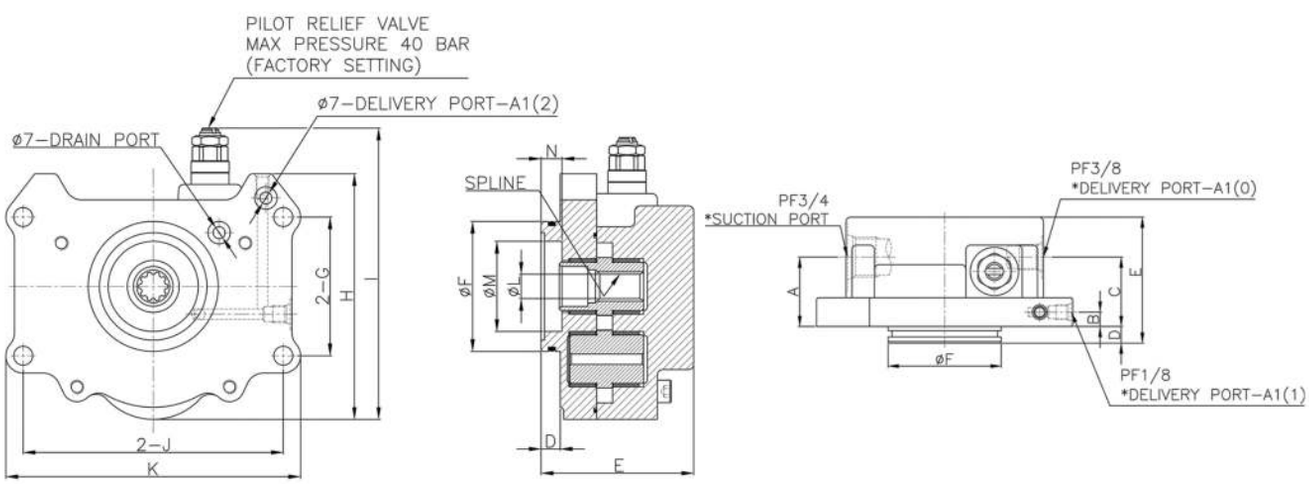

DIMENSIONS

(mm)

MODEL	A	B	C	D	E	F	G	H	I	J	K	L	M	N	SPLINE
PSV2-63	46	9.5	46	11	83.5	75	80	142	168	150	170	14	52	12	Z10

PVD SERIES
SINGLE TYPE GEAR PUMP

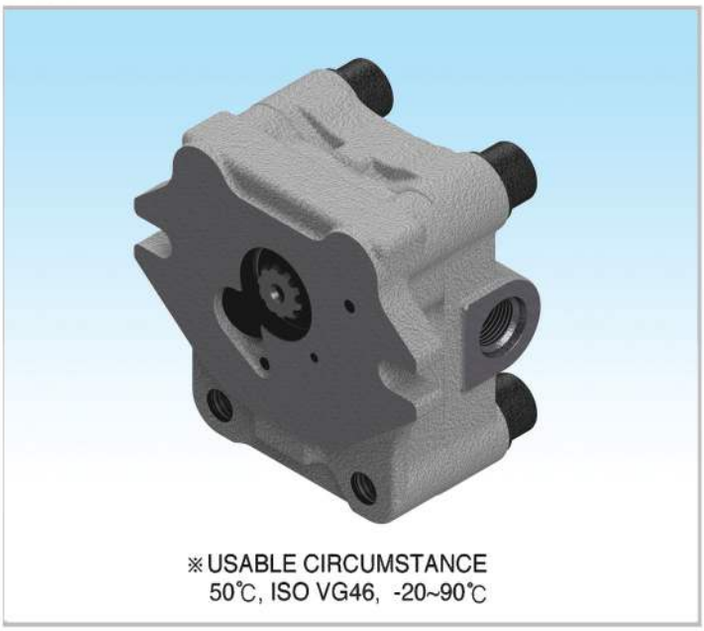

※USABLE CIRCUMSTANCE
50℃, ISO VG46, -20~90℃

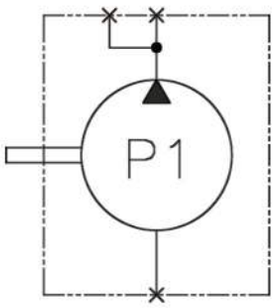

SPECIFICATIONS

MODEL	PVD-00B/0B/1B/2B/3B
Discharge rate(cc/rev)	4.5
Max. pressure (kg/cm²)	210
Max.speed(rpm)	3000

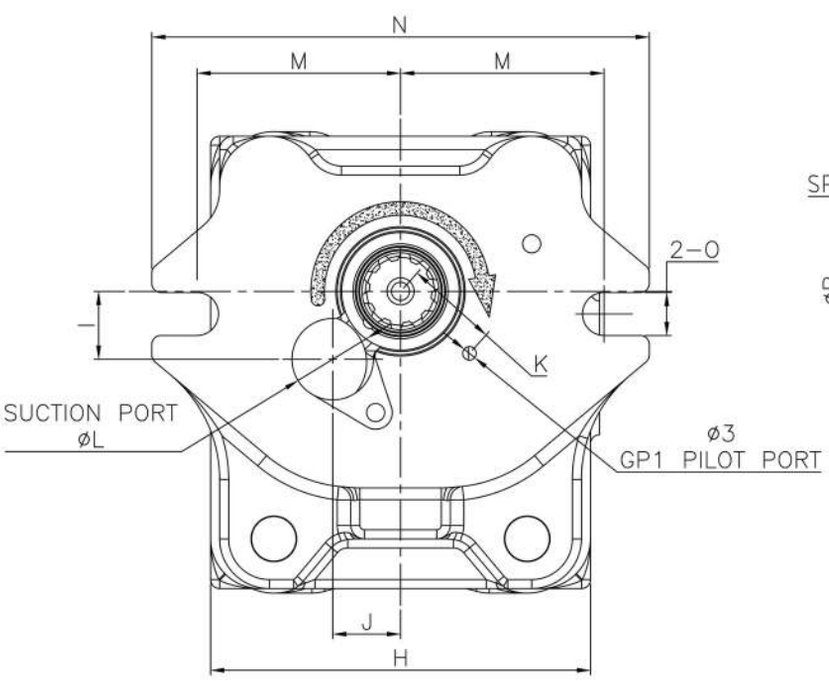

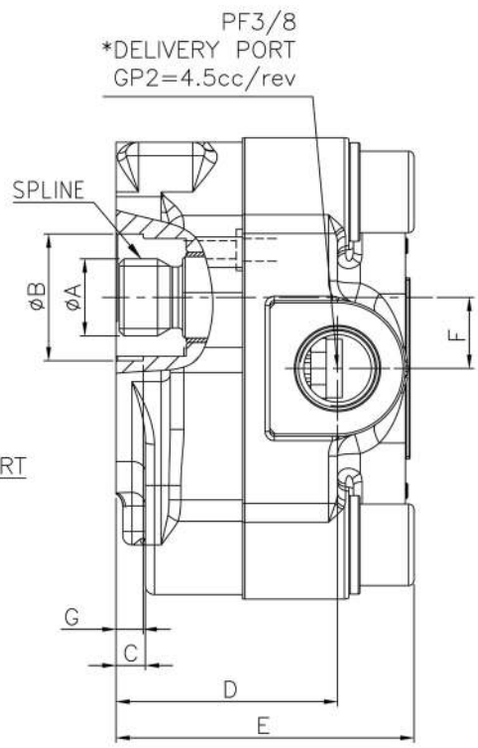

DIMENSIONS

(mm)

MODEL	A	B	C	D	E	F	G	H	I	J	K	L	M	N	O	SPLINE
PVD-00B/0B/1B/2B/3B	17	28	6.5	49	65.9	15.7	6	84	15	15	20.5	18	45	110	9.5	Z10

PVD SERIES
DOUBLE TYPE GEAR PUMP

SPECIFICATIONS

MODEL	PVD-00B/0B/1B/2B/3B					
	6&3cc/rev		10.5&4.5cc/rev		16.8&4.5cc/rev	
Discharge Rate(cc/rev)	P1	P2	P1	P2	P1	P2
	6	3	10.5	4.5	16.8	4.5
Max. Pressure (kg/cm²)	210	40	210	40	210	40
Max. Speed (rpm)	3000					



※USABLE CIRCUMSTANCE
50℃, ISO VG46, -20~90℃

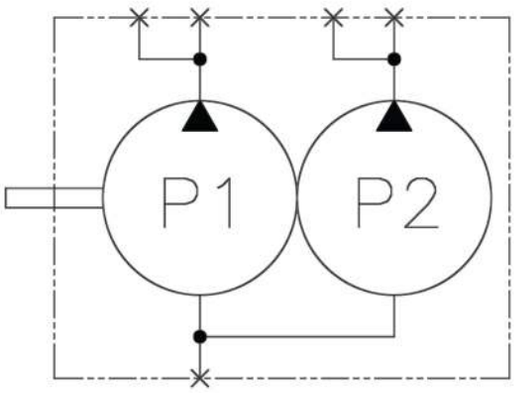

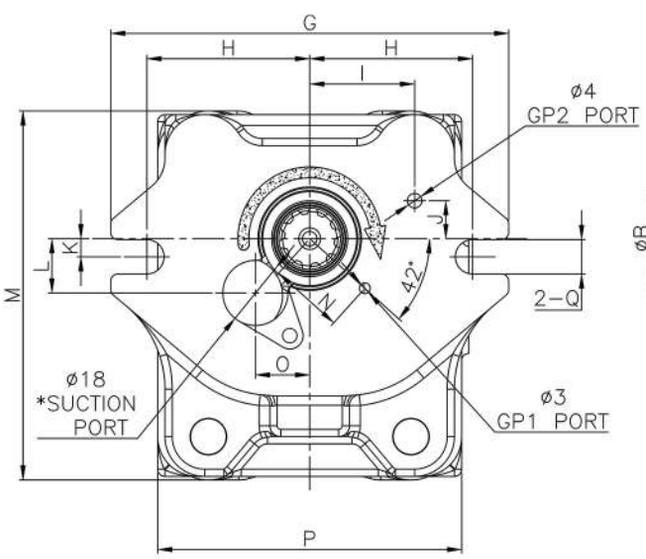

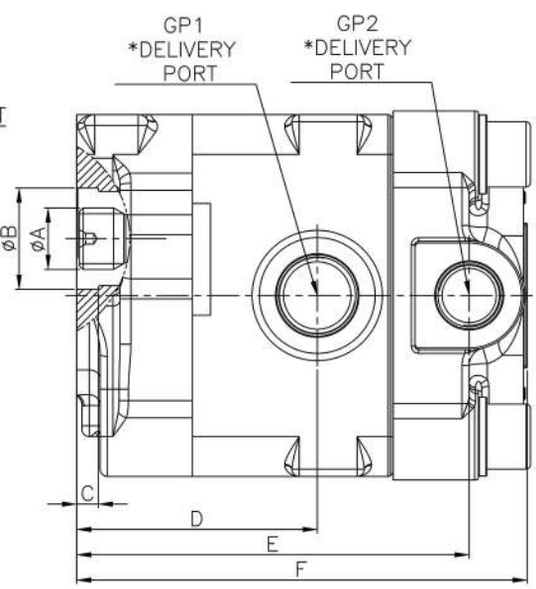

DIMENSIONS

(mm)

MODEL	A	B	C	D	E	F	G	H	I	J	K	L	M	N	O	P	Q	SPLINE	GP1	GP2
PVD-6&3	17	28	6	45.5	82.5	98.5	110	45	29	10.5	5	15	102	20.5	15	84	9.5	Z10	PF3/8	PF3/8
PVD-10.5&4.5				49.5	91.5	108													PF1/2	
PVD-16.8&4.5				66.5	108.5	125														

H3SP SERIES
SINGLE TYPE GEAR PUMP

SPECIFICATIONS

MODEL	H3SP30/36C
Discharge Rate(cc/rev)	10
Max. Pressure (kg/cm²)	35
Max. Speed (rpm)	2300



※USABLE CIRCUMSTANCE
50℃, ISO VG46, -20~90℃

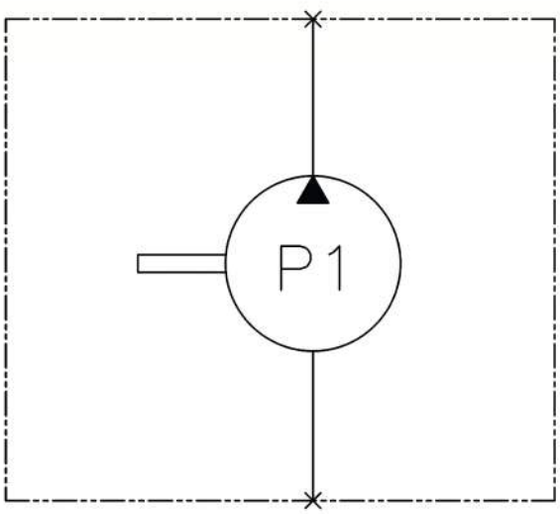

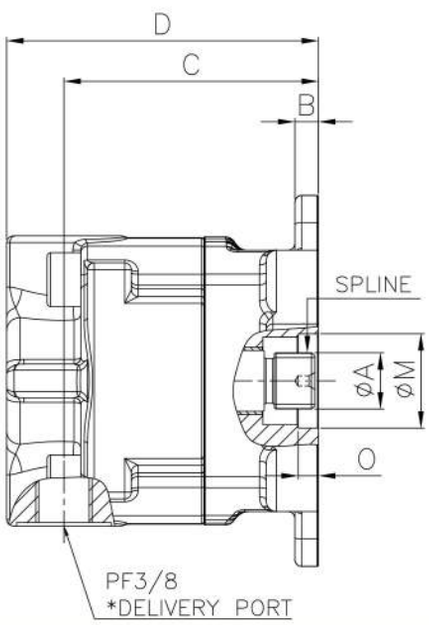

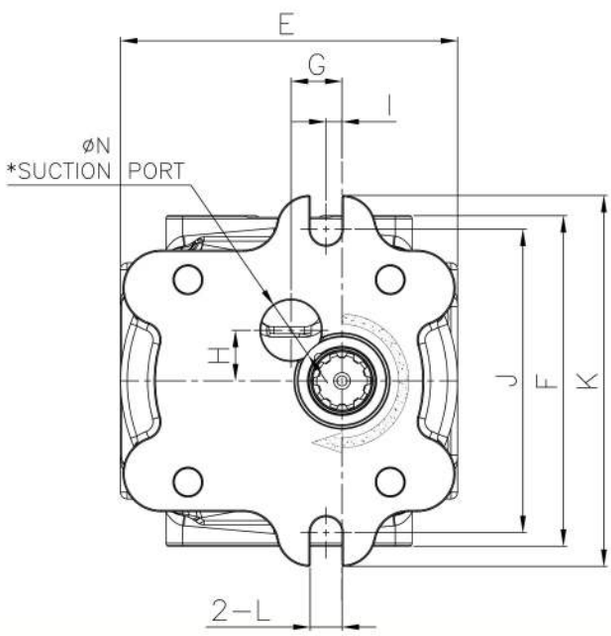

DIMENSIONS

(mm)

MODEL	A	B	C	D	E	F	G	H	I	J	K	L	M	N	O	SPLINE
H3SP30/36C	17	7	75.5	92.5	100	98	15	15	5	90	110	9.5	28	18	6	Z10

H3SP SERIES
DOUBLE TYPE GEAR PUMP

SPECIFICATIONS

MODEL	H3SP30/36C	
Discharge Rate(cc/rev)	P1	P2
	16.8	10
Max. Pressure (kg/cm²)	200	35
Max. Speed (rpm)	2300	



※USABLE CIRCUMSTANCE
50℃, ISO VG46, -20~90℃

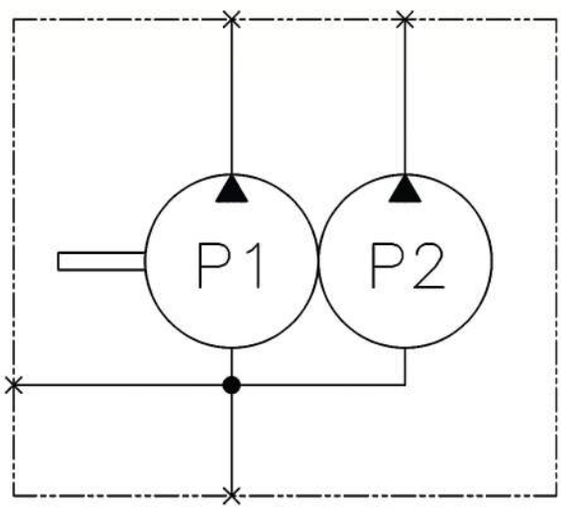

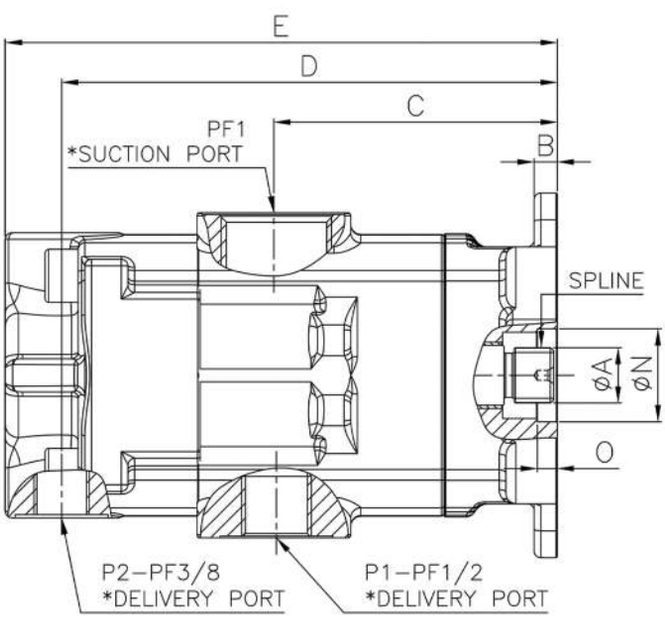

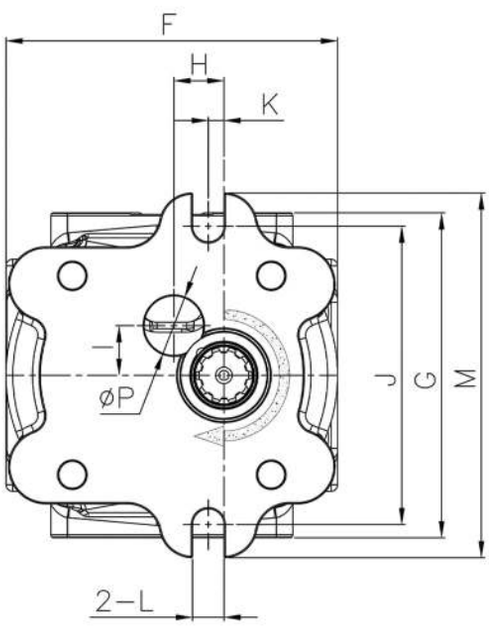

DIMENSIONS

(mm)

MODEL	A	B	C	D	E	F	G	H	I	J	K	L	M	N	O	P	SPLINE
H3SP30/36C	17	7	85.5	149.5	166	100	98	15	15	90	5	9.5	110	28	6	18	Z10

H7SP36
GEAR PUMP OF INNER DRAIN TYPE

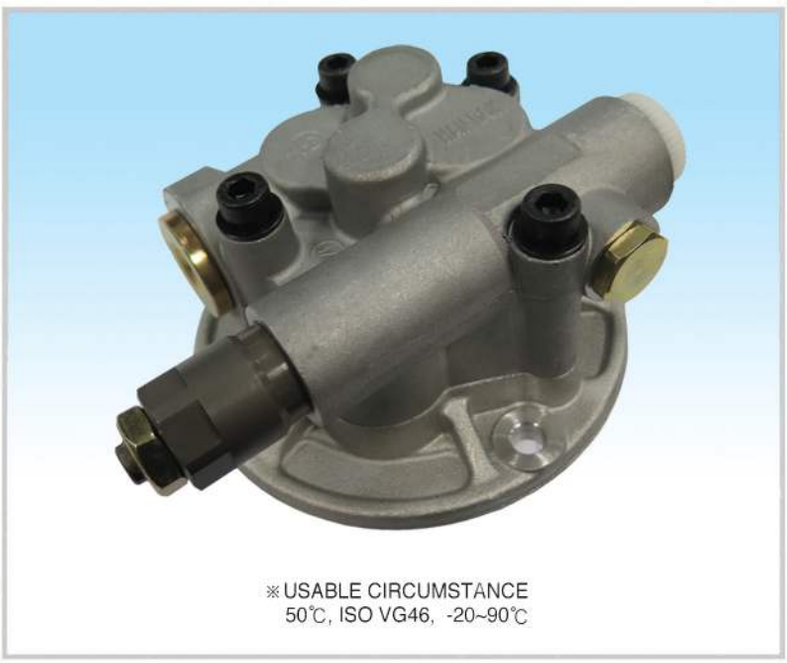

※USABLE CIRCUMSTANCE
50℃, ISO VG46, -20~90℃

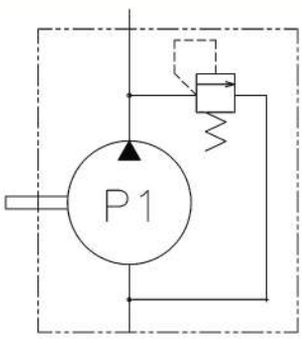

SPECIFICATIONS

MODEL	H7SP36
Discharge Rate(cc/rev)	15
Max. Pressure (kg/cm²)	50
Max. Speed (rpm)	2700

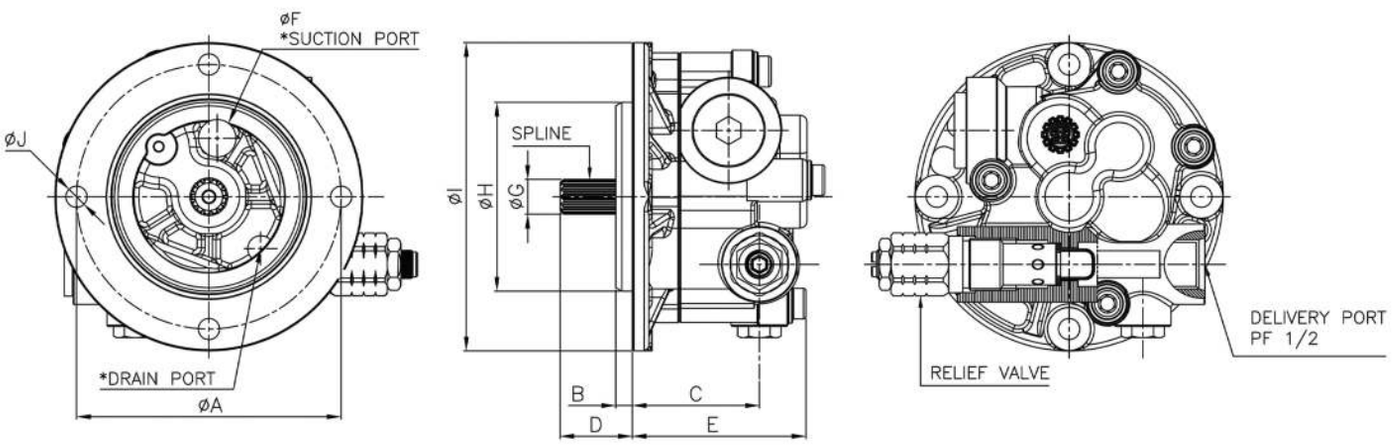

DIMENSIONS

(mm)

MODEL	A	B	C	D	E	F	G	H	I	J	SPLINE
H7SP36	112	7	54	30.6	73.5	16	14.8	80	103.5	9	Z13

SPECIFICATIONS

MODEL	HPVO91DW	HPVO91DS
Discharge Rate (cc/rev)	16.8	
Max. Pressure (kg/cm²)	180	
Max. Speed (rpm)	3200	
DIRECTION	CCW(L)	

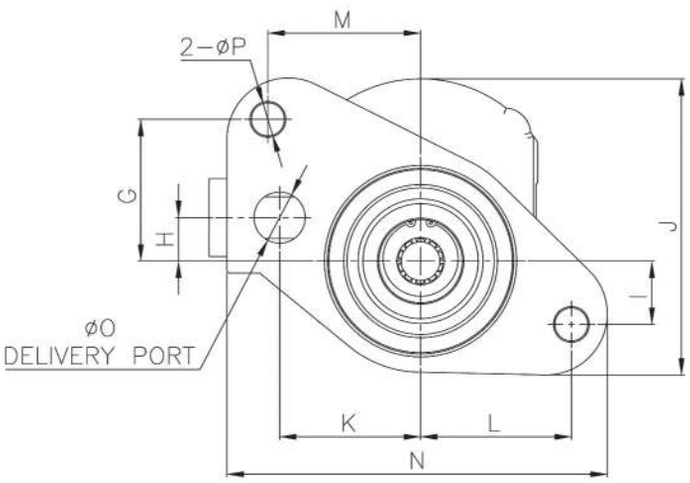



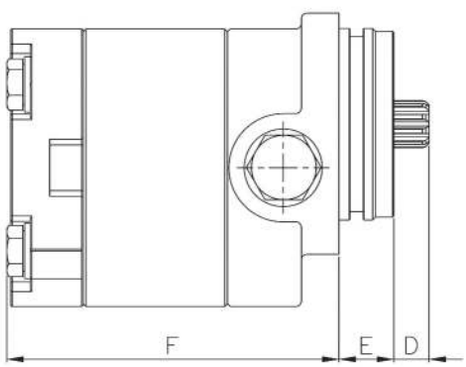

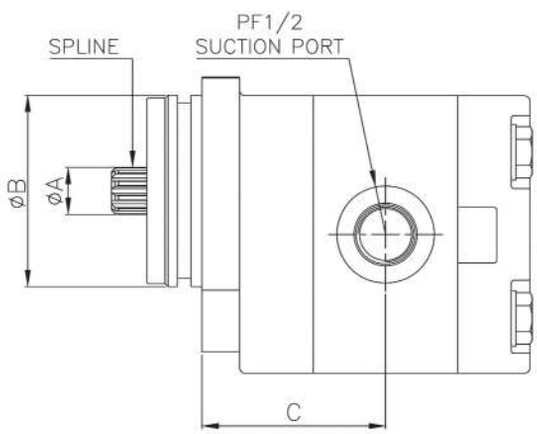

DIMENSIONS

(mm)

MODEL	A	B	C	D	E	F	G	H	I	J	K	L	M	N	O	P	SPLINE
HPVO91DW	17	69	66	12.6	19.8	119	51	15.7	22.8	107	50.6	54	54.8	136.5	18.4	11	Z10
HPVO91DS																	

SPECIFICATIONS

MODEL	HPV55 (PC100/120-3/5)	HPV35&95 (PC60-3/5, PC200&220-6/7)	HPV132 (PC300-6)
Discharge Rate (cc/rev)	17.6	13.2	17.6
Max. Pressure (kg/cm²)	50		
Max. Speed (rpm)	3200		

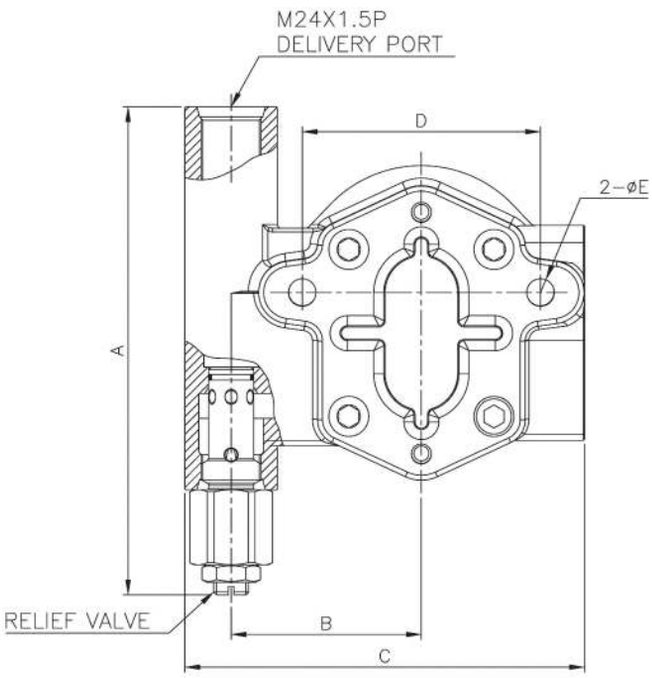



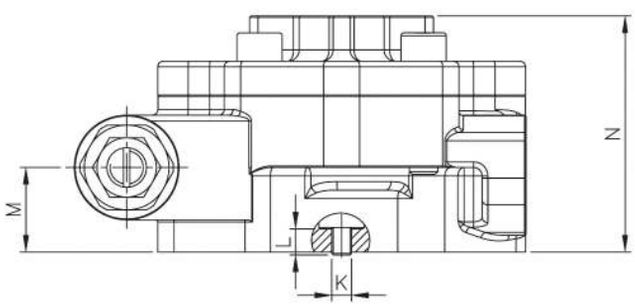

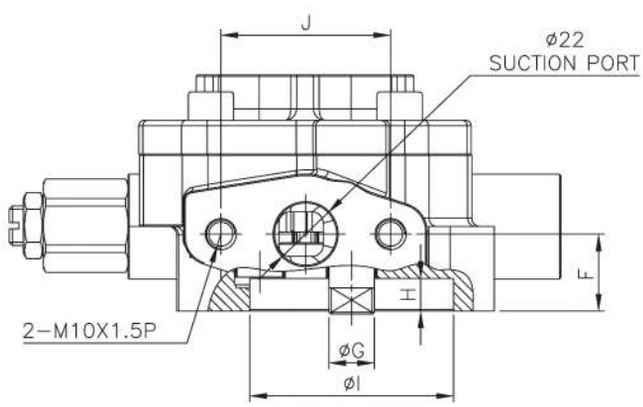

DIMENSIONS

(mm)

MODEL	A	B	C	D	E	F	G	H	I	J	K	L	M	N
HPV55 (PC100/120-3/5)	195	76	159.7	95.2	11	27.2	15	11.5	72	60	7	9.2	29.9	83.5
HPV55 (PC60-3/5)				105		26.3		8.2	84				28.9	75.4
HPV95 (PC200&220-6/7)														
HPV132 (PC300-6)						27.2							29.9	83.5

SPECIFICATIONS

MODEL	HPV71(PC150-3/5)	HPV90(PC200-3/5)
Discharge Rate (cc/rev)	23.5	
Max. Pressure (kg/cm²)	50	
Max. Speed (rpm)	3200	

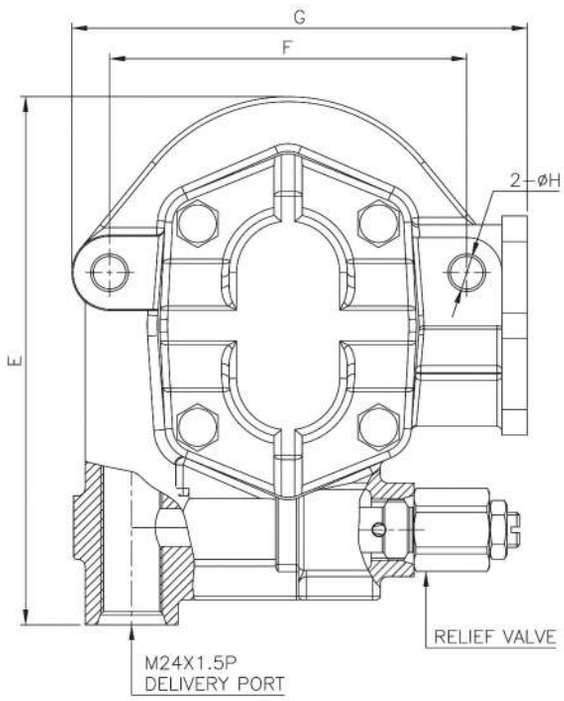


※USABLE CIRCUMSTANCE
50℃, ISO VG46, -20~90℃

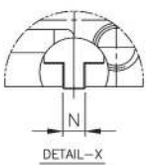

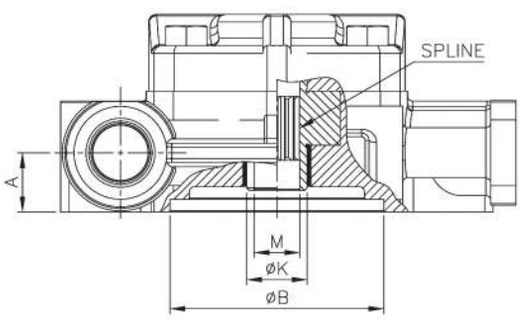

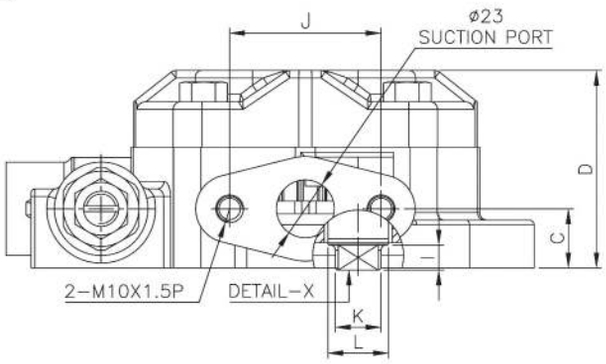

DIMENSIONS

(mm)

MODEL	A	B	C	D	E	F	G	H	I	J	K	L	M	N	SPLINE
HPV71 ,HPV90 (PC150-3, PC200-3)	26.5	85	26.5	78.5	210	142	181	13	–	60	24	–	18.2	–	–
HPV71 ,HPV90 (PC150-5, PC200-5)									10		18.2	24	–	9	Z 10

SPECIFICATIONS

MODEL	HPV160(PC300-3/5, PC400-3/5)
Discharge Rate (cc/rev)	28.6
Max. Pressure (kg/cm²)	50
Max. Speed (rpm)	3200

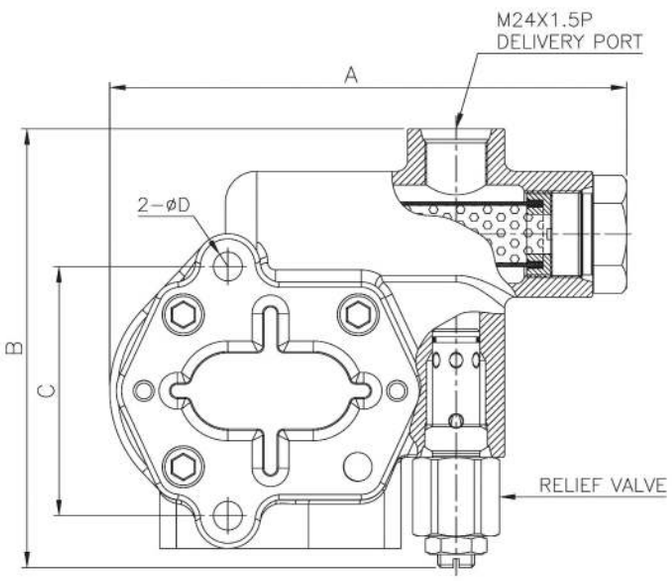



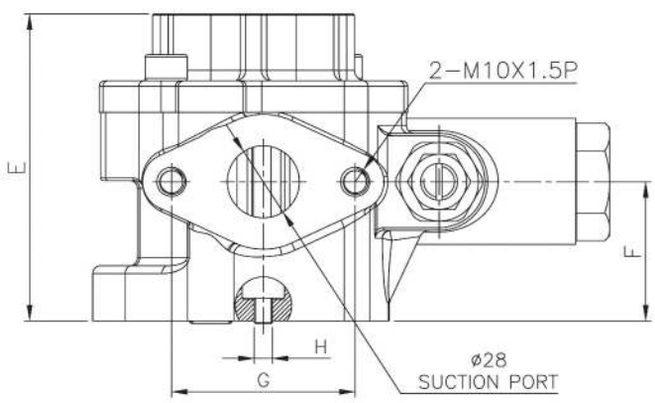

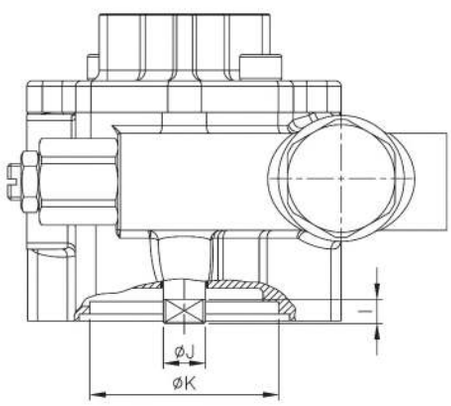

DIMENSIONS

(mm)

MODEL	A	B	C	D	E	F	G	H	I	J	K
HPV160 (PC300-3/5, PC400-3/5)	197	167	95	11	117	53	70	7	9.2	16	72

SPECIFICATIONS

MODEL	HPV75(PC60-6)
Discharge Rate (cc/rev)	16.8
Max. Pressure (kg/cm²)	40
Max. Speed(rpm)	3200

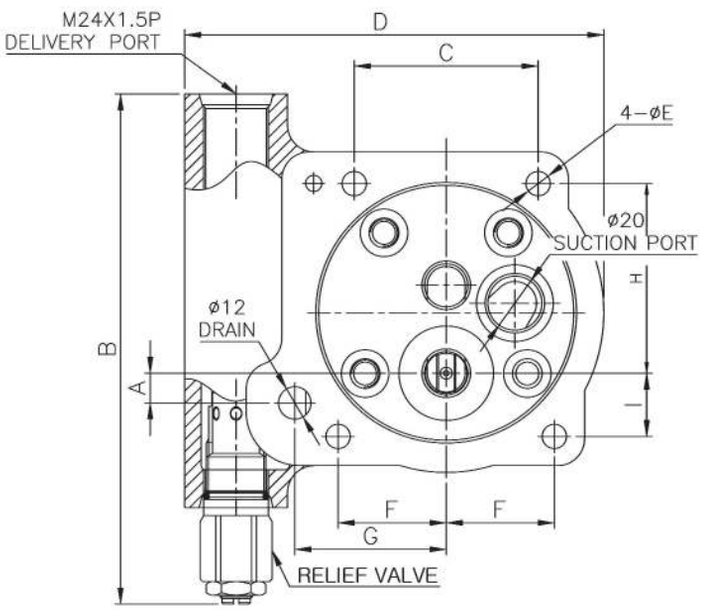



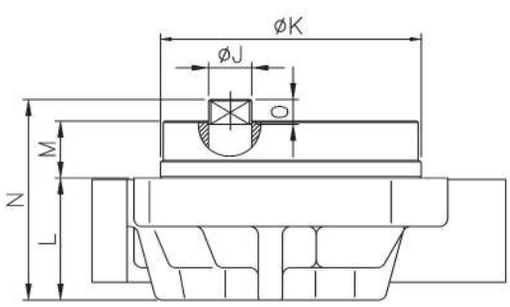

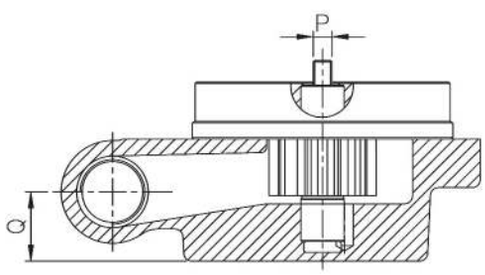

DIMENSIONS

(mm)

MODEL	A	B	C	D	E	F	G	H	I	J	K	L	M	N	O	P	Q
HPV75 (PC60-6)	11	189	68	155	9	40	56	70.1	23.4	16	96.4	45.2	21	74.2	9.2	7	25.6

SPECIFICATIONS

MODEL	SBS80(CCW)
Discharge Rate(cc/rev)	11
Max. Pressure (kg/cm²)	40
Max. Speed (rpm)	3200

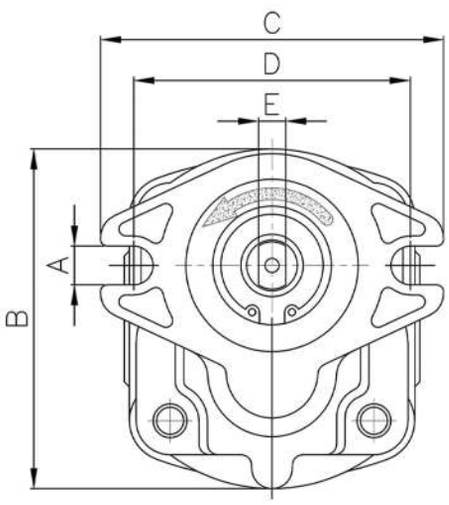



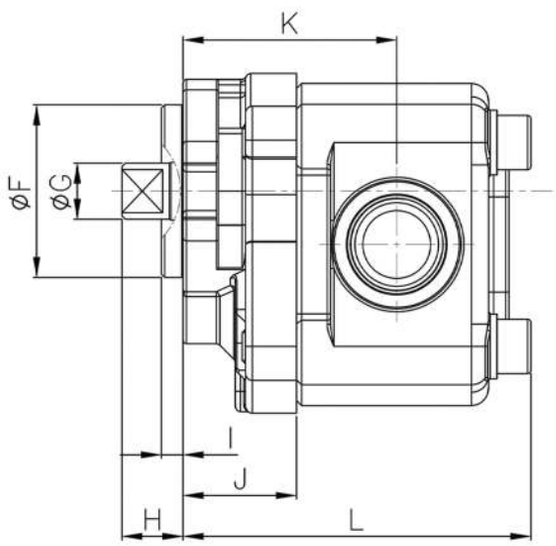

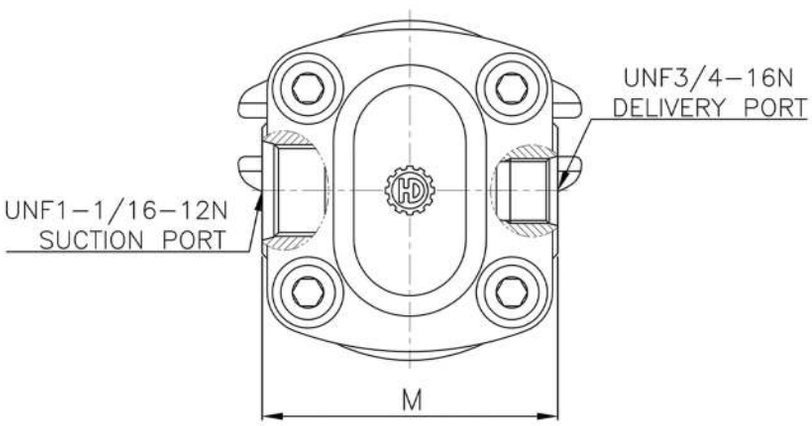

DIMENSIONS

(mm)

MODEL	A	B	C	D	E	F	G	H	I	J	K	L	M
SBS80 (CCW)	11.4	100	101	81.4	8	50.8	16.5	18	6.4	33.4	63	103	87

SBS120&140 FOR CATAERPILLAR
SINGLE TYPE GEAR PUMP

SPECIFICATIONS

MODEL	SBS120/140
Discharge Rate (cc/rev)	16
Max. Pressure (kg/cm²)	180
Max. Speed(rpm)	3200

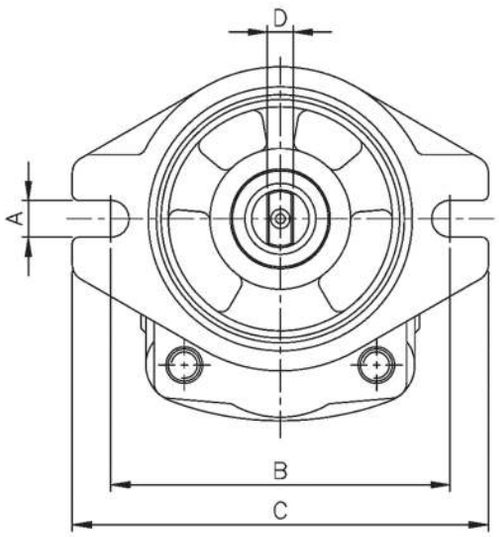


※USABLE CIRCUMSTANCE
50℃, ISO VG46, -20~90℃

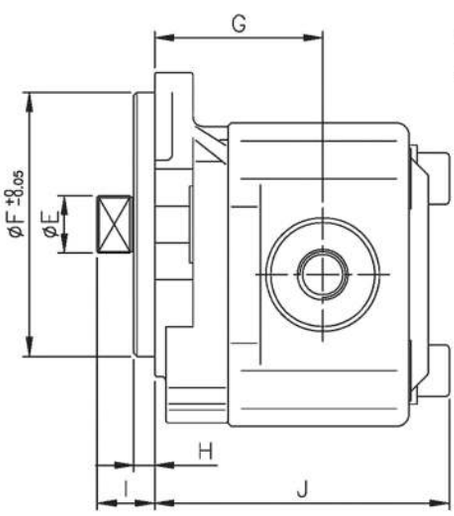

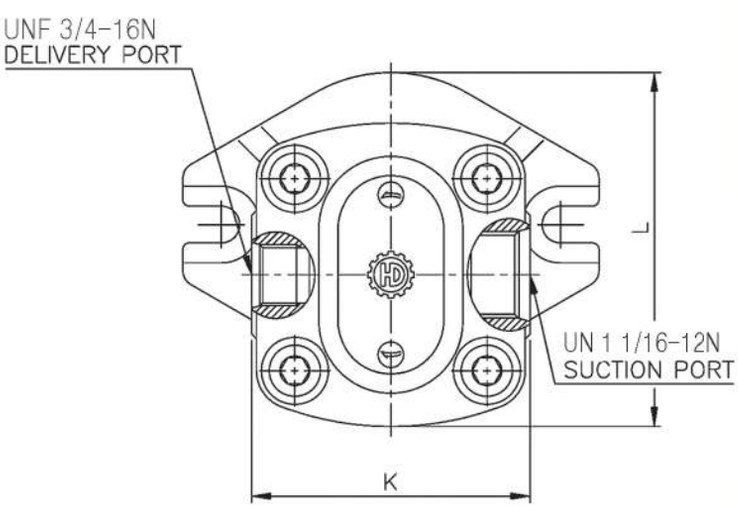

DIMENSIONS

(mm)

MODEL	A	B	C	D	E	F	G	H	I	J	K	L
SBS120/140 (SINGLE)	11.5	106	130	8	17.9	82.5	52.5	6.5	18	92	87	111

SBS120&140 FOR CATERPILLAR
DOUBLE TYPE GEAR PUMP

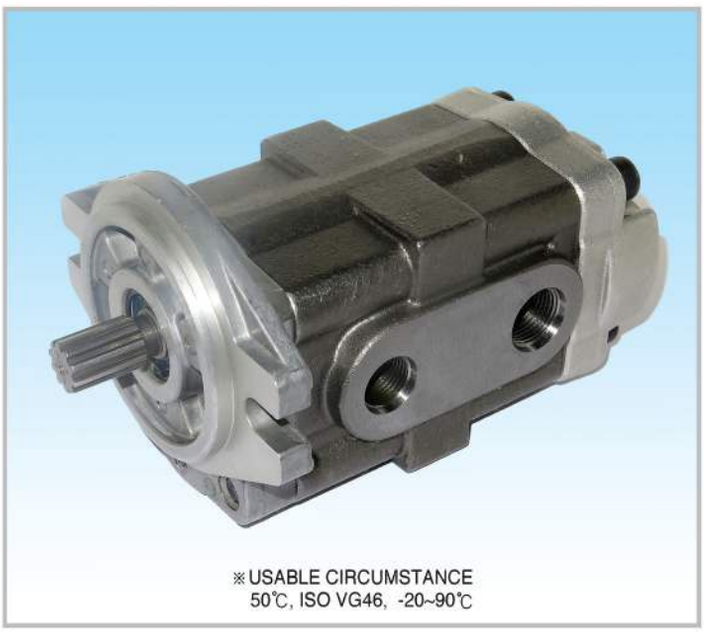

※USABLE CIRCUMSTANCE
50℃, ISO VG46, -20~90℃

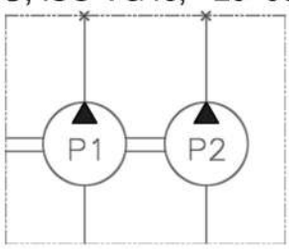

SPECIFICATIONS

MODEL	SBS120&140	
Discharge Rate (cc/rev)	P1	P2
	20	13
Max. pressure (kg/cm²)	120	150
Max. Speed (rpm)	1800	

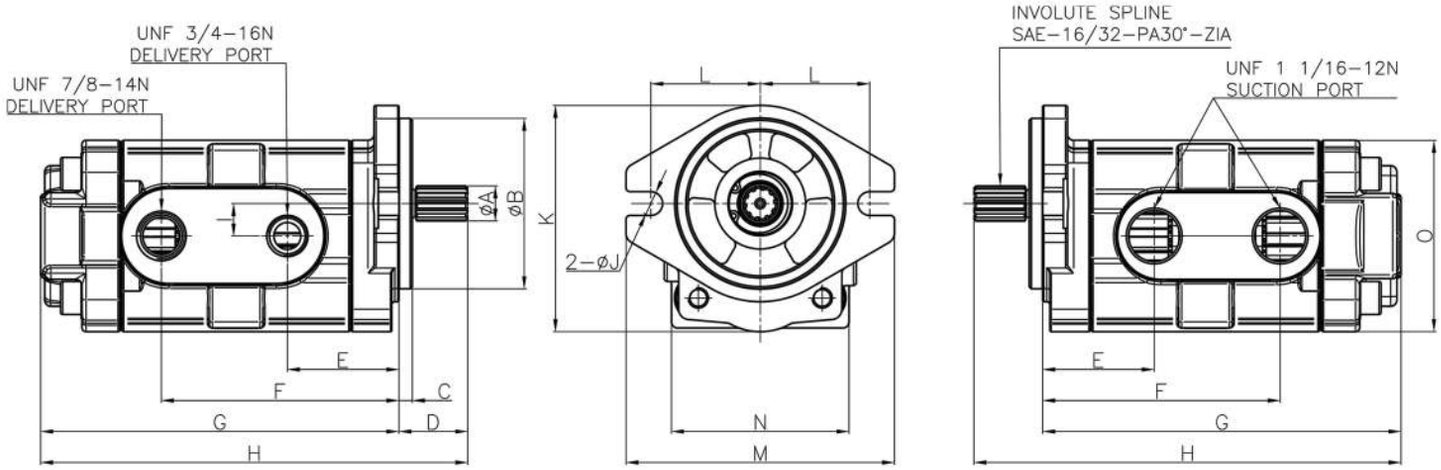

DIMENSIONS

(mm)

MODEL	A	B	C	D	E	F	G	H	I	J	K	L	M	N	O	SPLINE
SBS120/140 (DOUBLE)	17	82.5	6.5	33.3	54	115	173.5	206.8	15.7	11.5	109.5	53	130	86	92.6	Z10

SPECIFICATIONS

MODEL	H3V63/NV64	H3V112/NV90/111	H3V140/180/NV137/172
Discharge Rate (cc/rev)	12		15
Max. Pressure (kg/cm²)	170		
Max. Speed (rpm)	3250	2700	2500

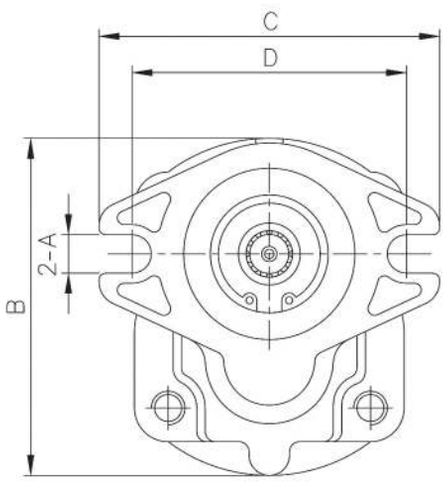



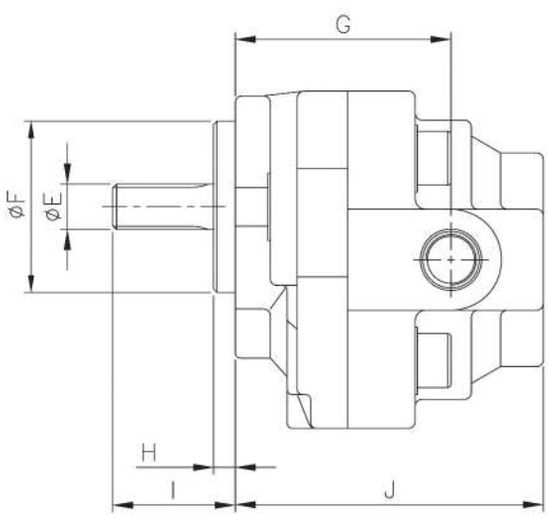

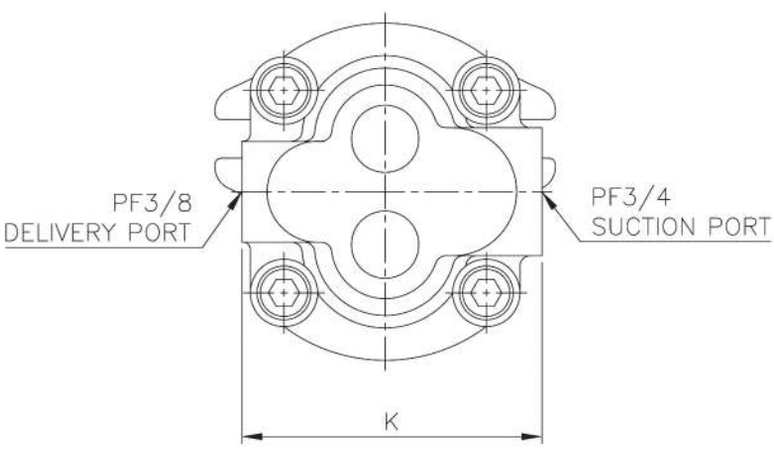

DIMENSIONS

(mm)

MODEL	A	B	C	D	E	F	G	H	I	J	K	SPLINE
H3V / NV SERIES	11.4	100	101	81.4	13.5	50.8	64	6.4	37.7	91.4	89	Z12

SPECIFICATIONS

MODEL	SPK10/10(E200B)	AP12(E200B)
Discharge Rate (cc/rev)	12	
Max. Pressure (kg/cm²)	170	
Max. Speed (rpm)	3200	

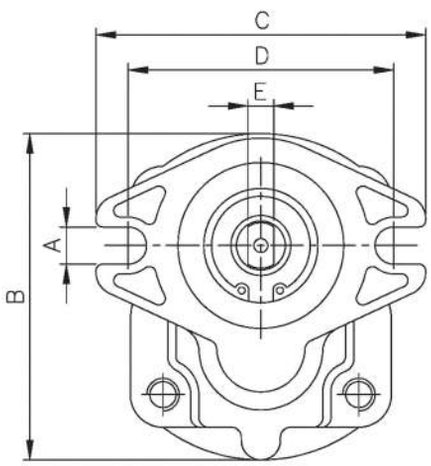


※USABLE CIRCUMSTANCE
50℃, ISO VG46, -20~90℃

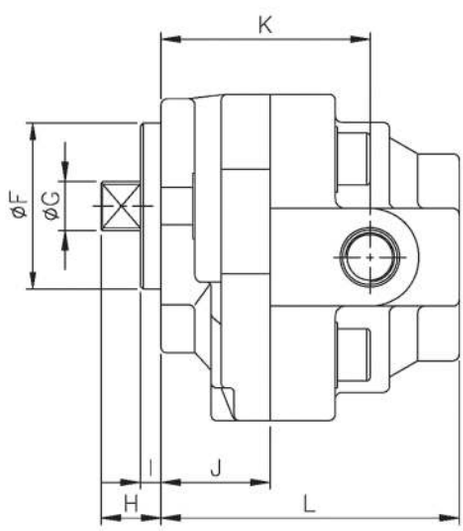

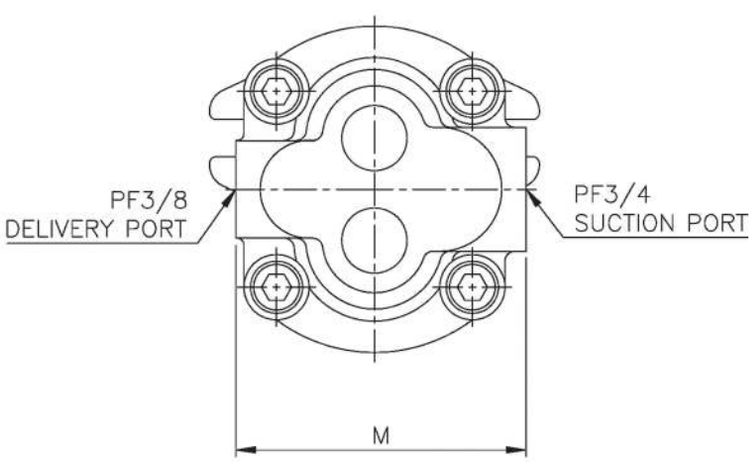

DIMENSIONS

(mm)

MODEL	A	B	C	D	E	F	G	H	I	J	K	L	M
SPK10/10(E200B) AP12(E200B)	11.4	100	101	81.4	8	50.8	15	18.4	6.4	33.4	64	91.4	89

SPECIFICATIONS

MODEL	AP12(E320B)
Discharge Rate (cc/rev)	11
Max. Pressure (kg/cm²)	170
Max. Speed(rpm)	3200

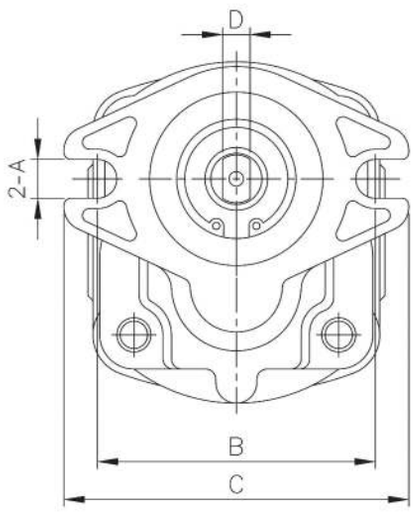



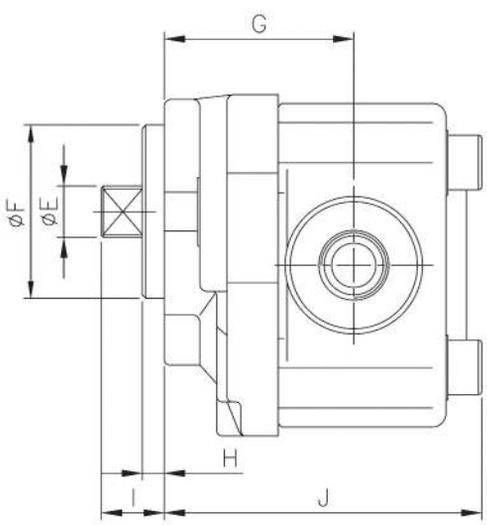

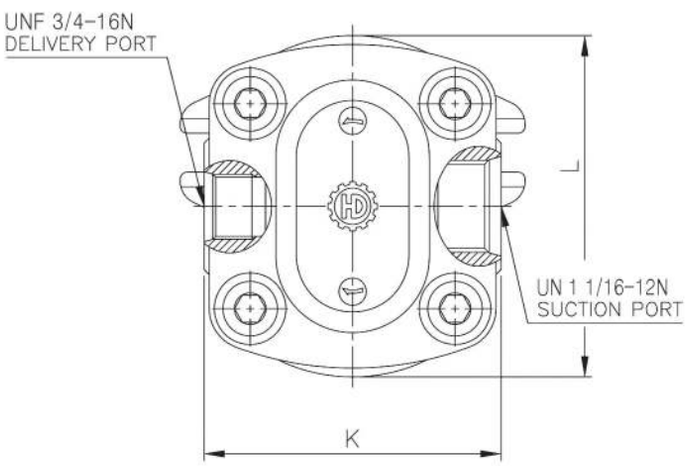

DIMENSIONS

(mm)

MODEL	A	B	C	D	E	F	G	H	I	J	K	L
AP12 (E320B)	11.4	81.4	101	8	16.5	50.8	63	6.4	18	99	87	100

A8VO55/80/107
SINGLE TYPE GEAR PUMP



※USABLE CIRCUMSTANCE
50℃, ISO VG46, -20~90℃

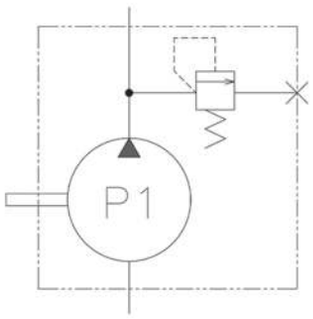

SPECIFICATIONS

MODEL	A8VO55/80/107
Discharge rate(cc/rev)	P1
	8
Max. pressure (kg/cm²)	40
Max.speed(rpm)	2500
DIRECTION	CCW (L)

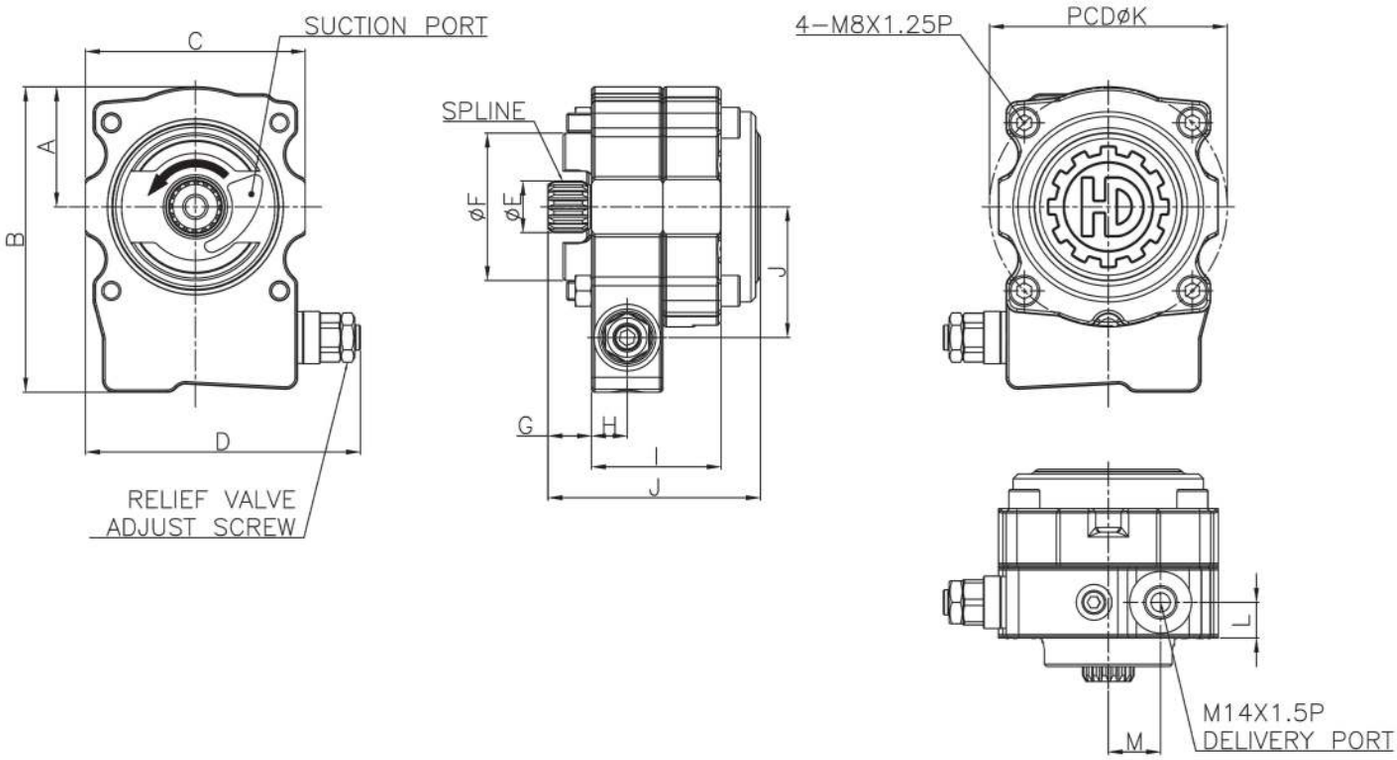

DIMENSIONS

(mm)

MODEL	A	B	C	D	E	F	G	H	I	J	K	L	M	SPLINE
A8VO55/80/107	50.5	128	92	115	21.7	62	18.3	15	54.5	89	100	15	22	Z16

A8VO80
SINGLE TYPE GEAR PUMP

SPECIFICATIONS

MODEL	A8VO80
Discharge Rate (cc/rev)	8
Max. Pressure (kg/cm²)	50
Max. Speed (rpm)	2500

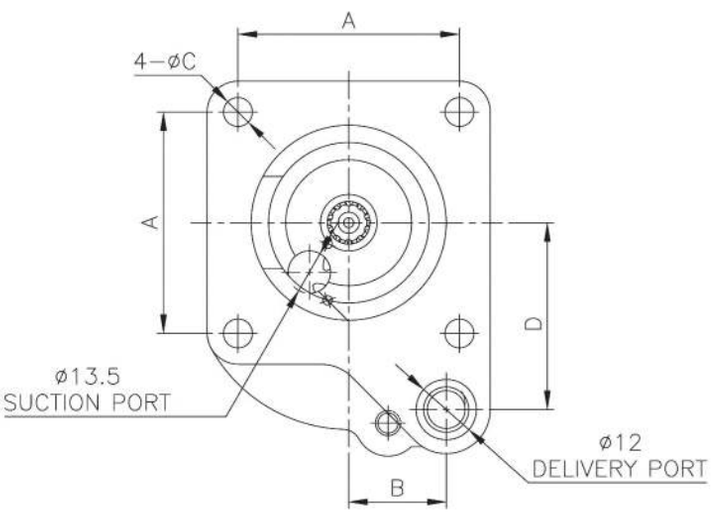



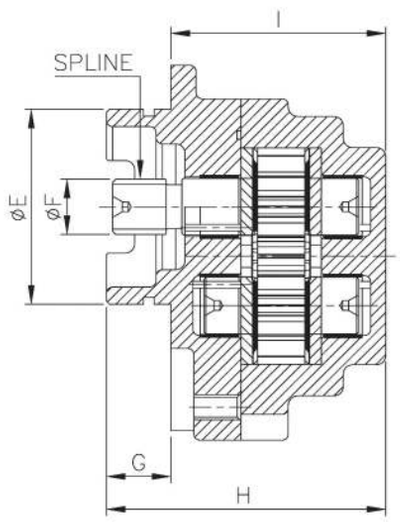

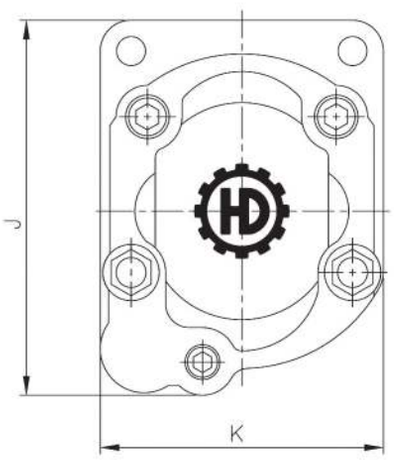

DIMENSIONS

(mm)

MODEL	A	B	C	D	E	F	G	H	I	J	K	SPLINE
A8VO80	70.4	31	9.2	59.4	62	17.6	20.5	88.8	68.3	119.2	90	Z13

A8VO107
SINGLE TYPE GEAR PUMP

SPECIFICATIONS

MODEL	A8VO107
Discharge Rate (cc/rev)	12
Max. Pressure (kg/cm²)	50
Max. Speed(rpm)	2500

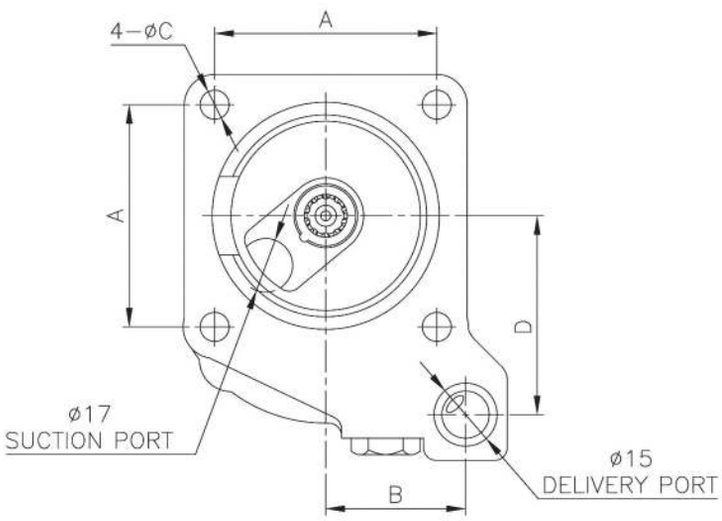

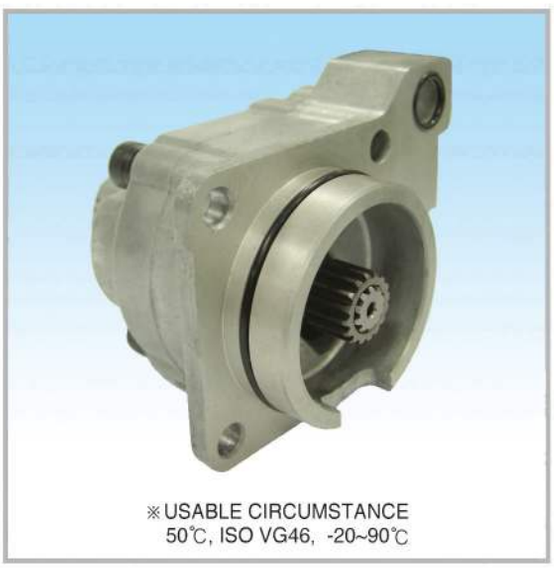

※USABLE CIRCUMSTANCE
50℃, ISO VG46, -20~90℃

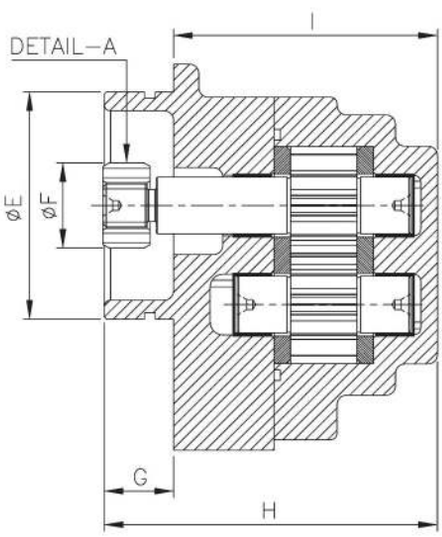

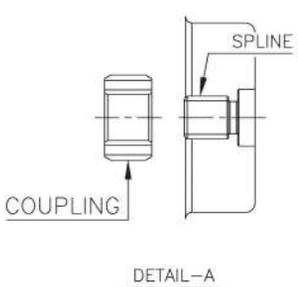

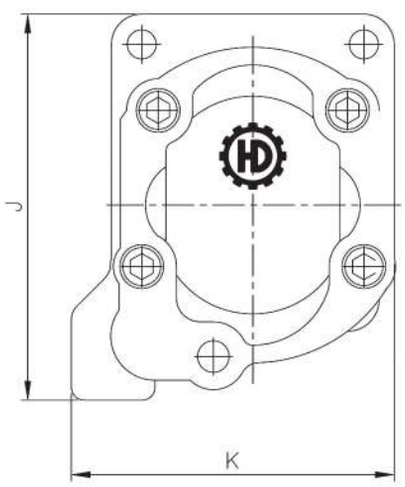

DIMENSIONS

(mm)

MODEL	A	B	C	D	E	F	G	H	I	J	K	SPLINE
A8VO107	70.4	44.3	9.2	63	72	21.6	22	105.6	83.6	122.3	102.3	Z10

A8VO160/200
SINGLE TYPE GEAR PUMPS



※USABLE CIRCUMSTANCE
50℃, ISO VG46, -20~90℃

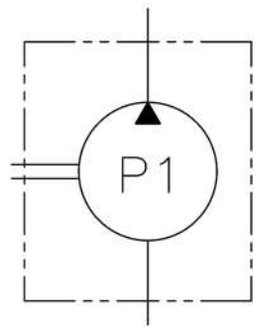

SPECIFICATIONS

MODEL	A8VO160/200
Discharge Rate(cc/rev)	19
Max. Pressure (kg/cm²)	40
Max. Speed (rpm)	2000
DIRECTION	CW (R)

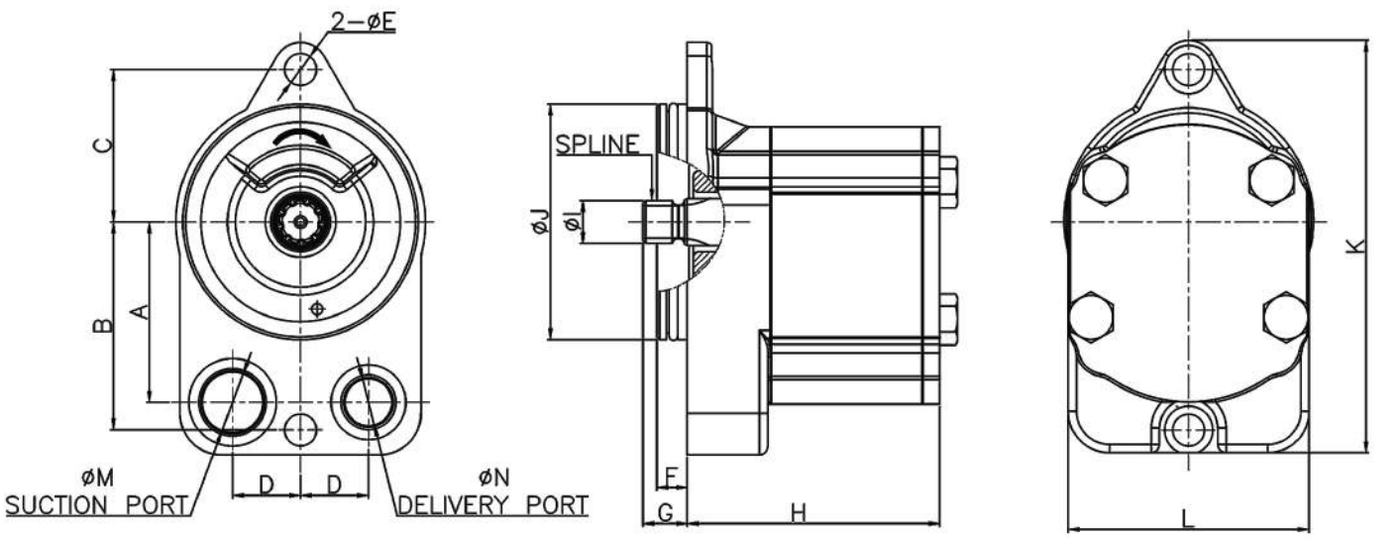

DIMENSIONS

(mm)

MODEL	A	B	C	D	E	F	G	H	I	J	K	L	M	N	SPLINE
A8VO160	65	75	55	24.5	11.5	16.8	12	91	17	85	149	87	17	14	Z10
A8VO200						11	16		15.4				22	17	Z9

SPECIFICATIONS

MODEL	A8V55/59/80/86/107/115	A8V172
Discharge Rate (cc/rev)	12	16.6
Max. Pressure (kg/cm²)	50	
Max. Speed(rpm)	2500	

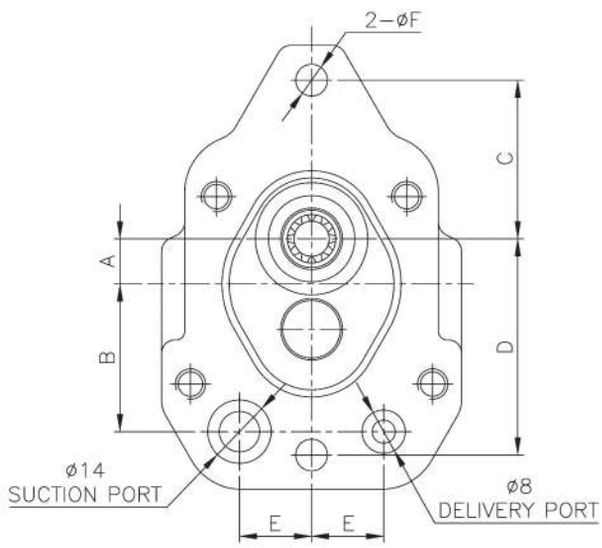



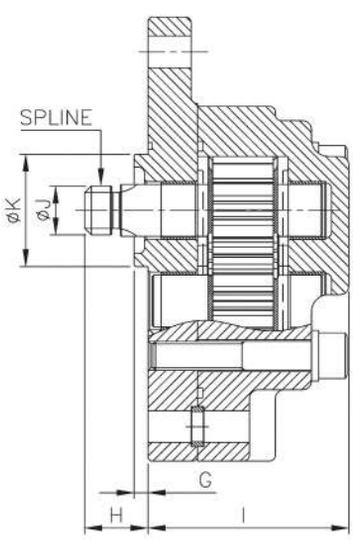

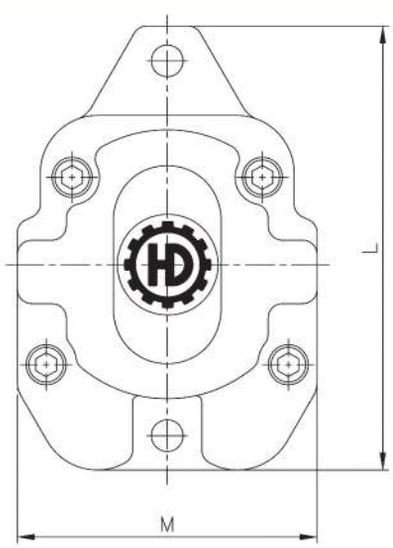

DIMENSIONS

MODEL	A	B	C	D	E	F	G	H	I	J	K	L	M	SPLINE
A8V SERIES	15.7	51.2	55	75	25	11	4.8	21.9	69.7	17	39	154	104	Z10

SPECIFICATIONS

MODEL	NV64/50	NV80/90/111	NV120/137	NV172
Discharge Rate (cc/rev)	12		15	
Max. Pressure (kg/cm²)	50			
Max. Speed (rpm)	3250	2700	2500	2200

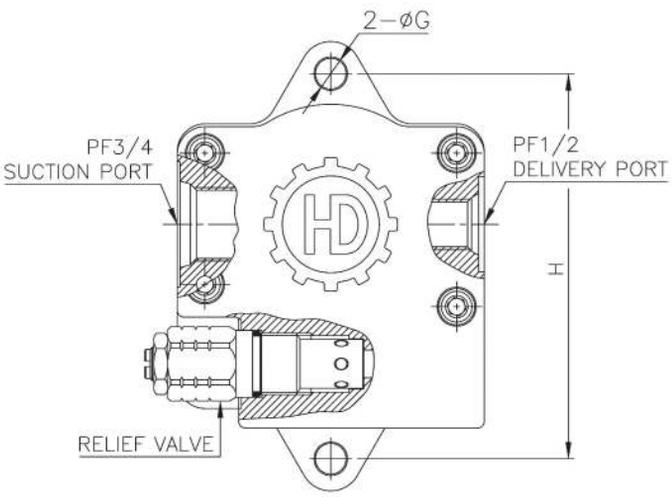

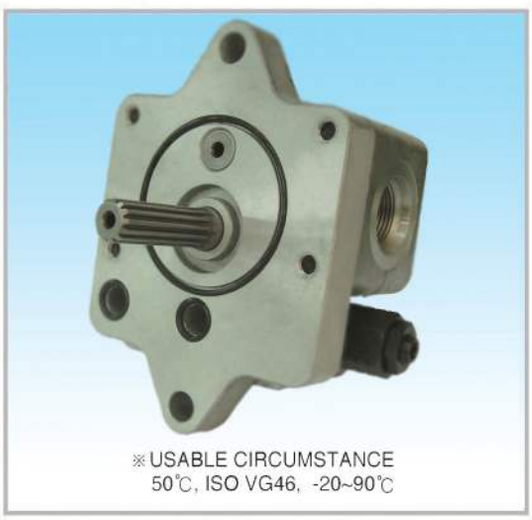

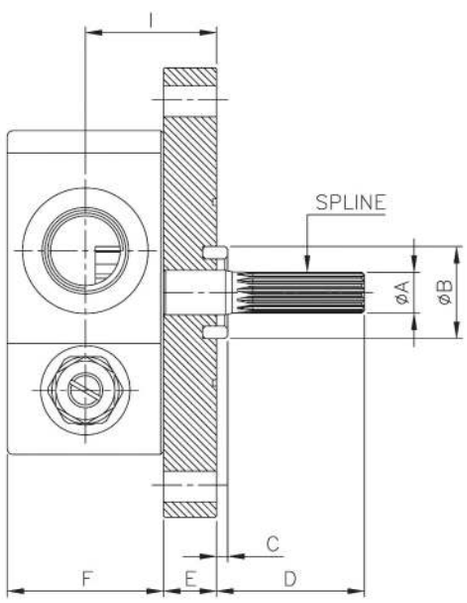

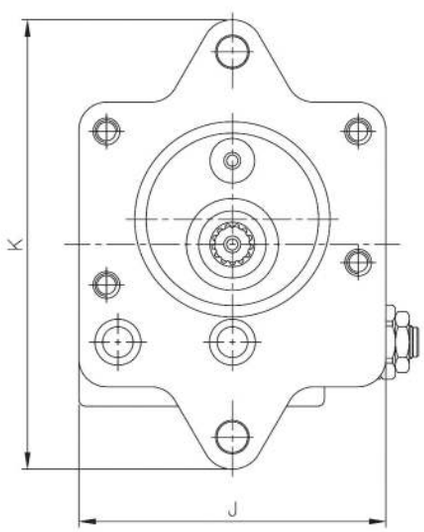

DIMENSIONS

(mm)

MODEL	A	B	C	D	E	F	G	H	I	J	K	SPLINE
NV SERIES	14.8	33	4	53	19	56	11	138	47	110	161	Z 13

CUT-OFF VALVE(H3V SERIES)

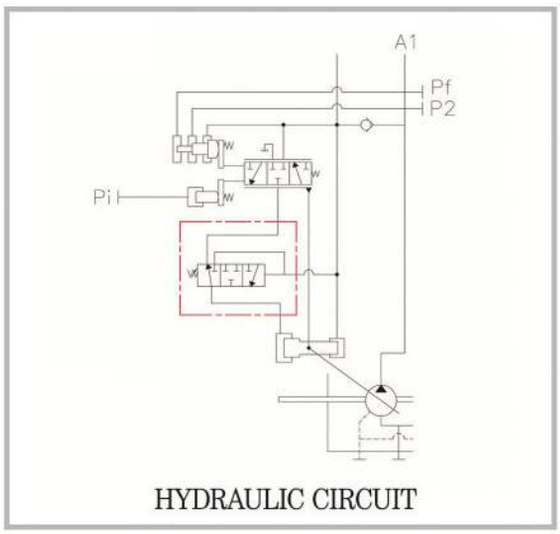

HYDRAULIC CIRCUIT

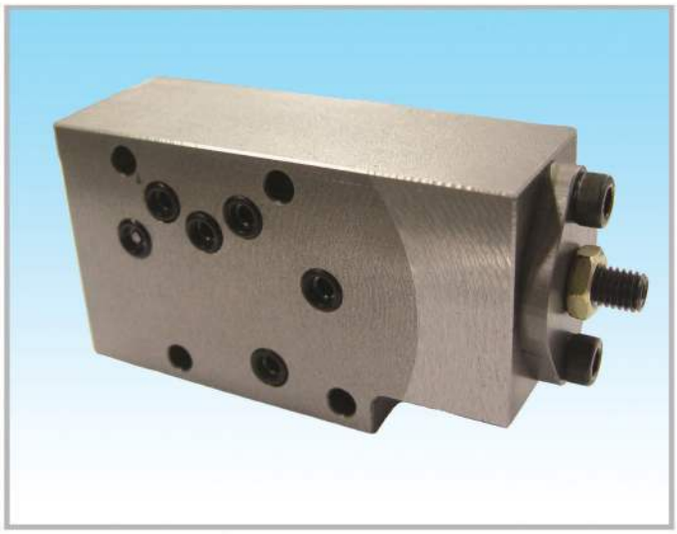

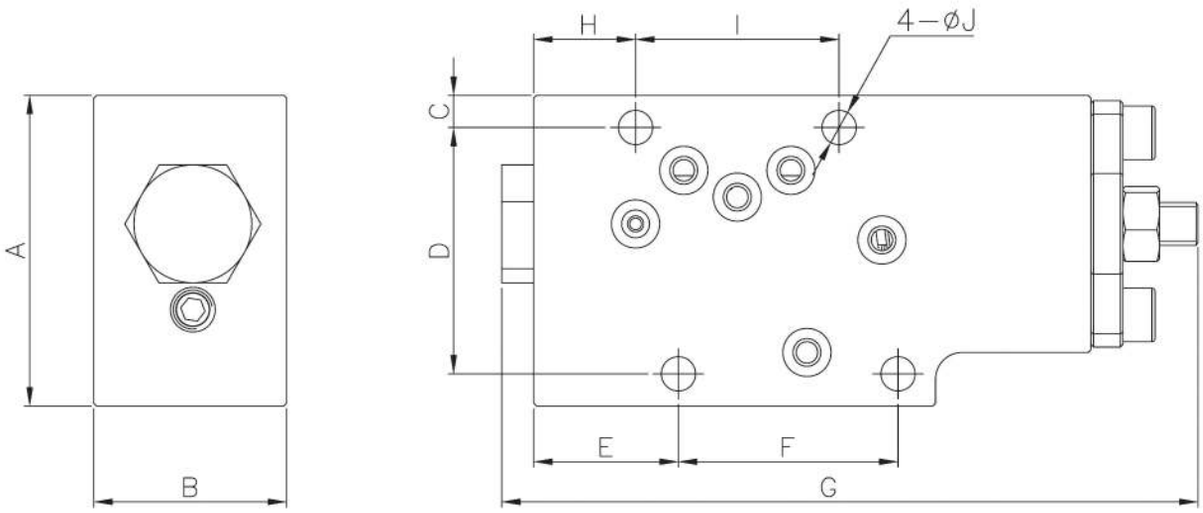

DIMENSIONS

(mm)

MODEL	A	B	C	D	E	F	G	H	I	J
H3V SERIES	58	36	6	46	27	41	130	19	38	6.4

LOAD SENSING VALVE(HLOP TYPE)

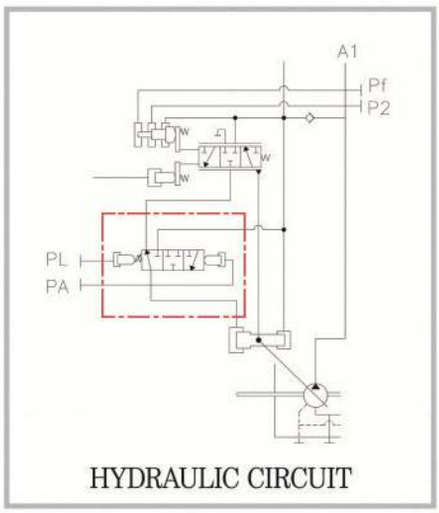

HYDRAULIC CIRCUIT



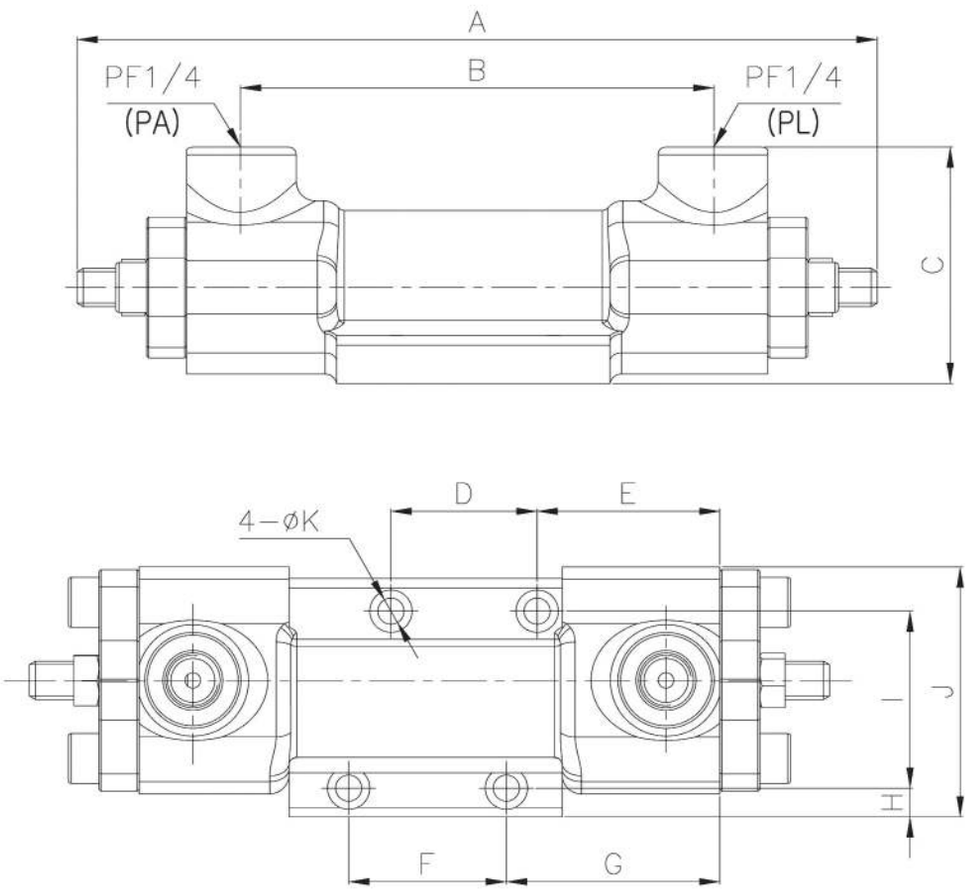

DIMENSIONS

(mm)

MODEL	A	B	C	D	E	F	G	H	I	J	K
H3V SERIES	210	123	61.5	38	47.5	41	55.5	7.5	46	65	6.2

LOAD SENSING VALVE (5L00/7L00 TYPE) (H3V/H5V SERIES)

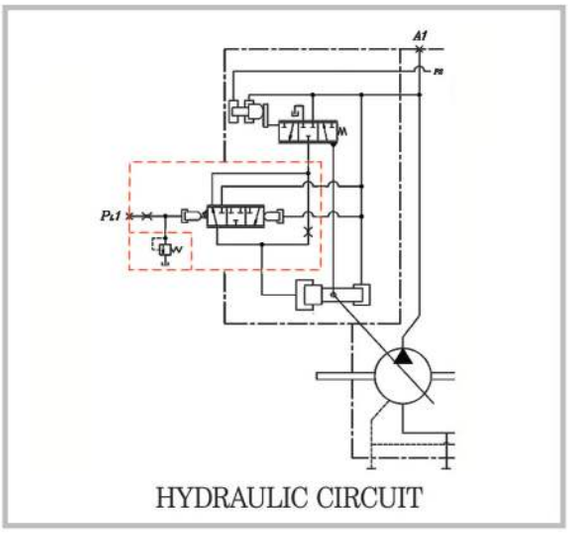

HYDRAULIC CIRCUIT



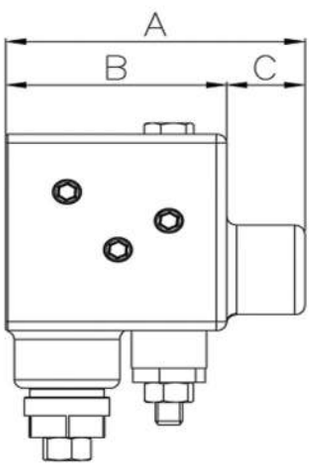

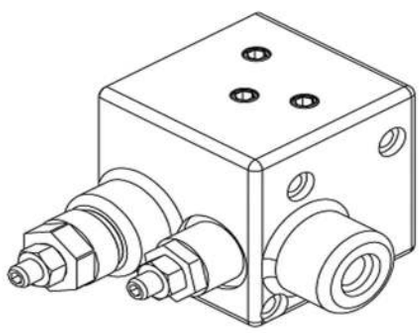

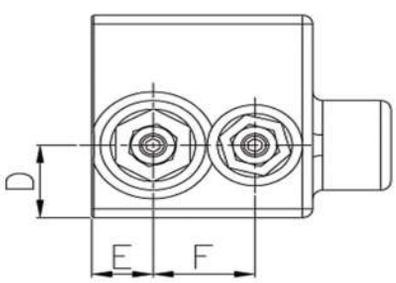

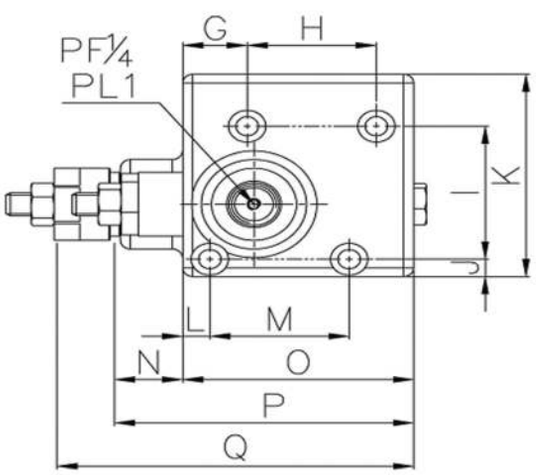

DIMENSIONS

(mm)

MODEL	A	B	C	D	E	F	G	H	I	J	K	L	M	N	O	P	Q
5L00/7L00	88	65	23	25	18	30	19	38	46	6	70	8	41	20	68	88	105

EPR VALVE CONTROL BOARD (HBO2.0A)

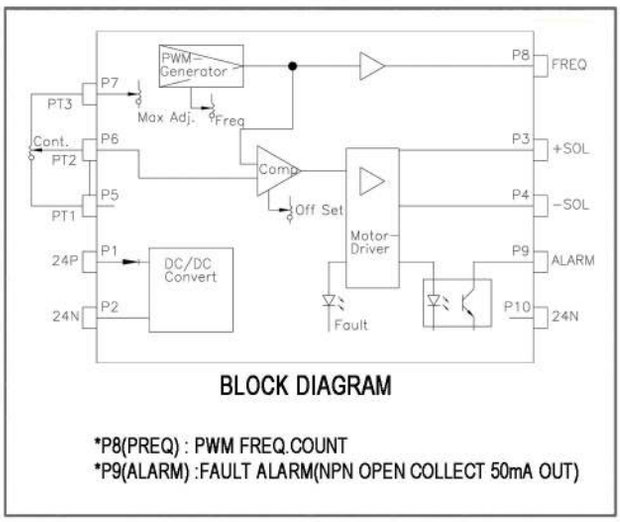

BLOCK DIAGRAM

*P8(PREQ) : PWM FREQ.COUNT
*P9(ALARM) :FAULT ALARM(NPN OPEN COLLECT 50mA OUT)



SPECIFICATIONS

Model		HBO2.0A
Power supply		DC24V(21~30)
Power Consumption		Below 30VA
Maximum output current		1.2A(Max)
Input Impedance		100KΩ
Solenoid coil resistance		10 ~25Ω
Command	Voltage input	DC 0 ~ 12V(Max)
	Resistance input	Variable resistor 10KΩ
Dither Adjustment range		40Hz~2000Hz
Operating temperature range		-10°C ~ 70°C
Adjust the temperature range		0°C ~ 50°C
Alarm (drive) current		100mA(Max)

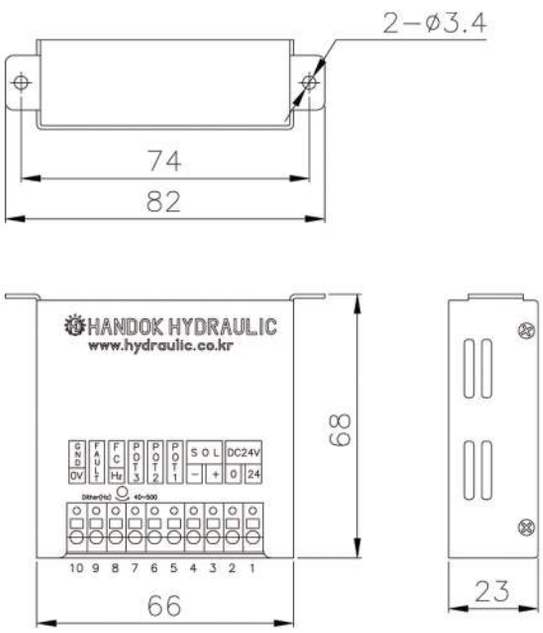

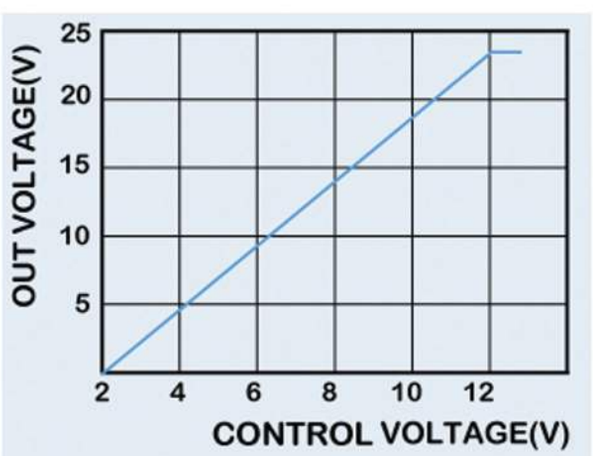

- INSTRUCTION FOR USE -

* Each connecting pins are supposed to be precisely put together, Don't operate more than rating
* Input power should be keep supplies stably
-If the power supplies are not stabilizing, either the output is not stable, or can be cause of the failure
* In case of alarm, disconnect main power, power-up after eliminate the cause
-If this problem persists after eliminate the cause, Do not power-up

Proportional pressure reducing valve (HPR1D-40F-243)

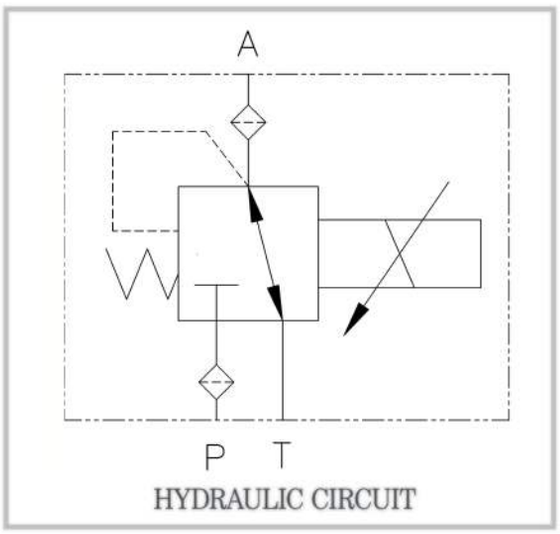



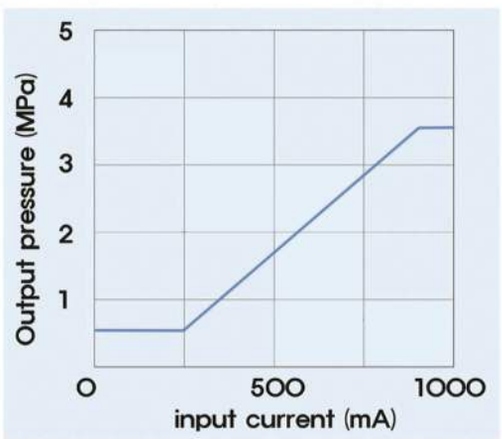

SPECIFICATIONS

1.CONTROL SPECIFICATIONS : POSITIVE PROPORTIONAL

2.SECOND PRESSURE/MAX.SET PRESSURE : 40Kgf/cm^2(3.9Mpa)

3.SOLENOID RATING : 0.9A FOR DC24V

4.COIL RESISTANCE(Ω) : 5.5

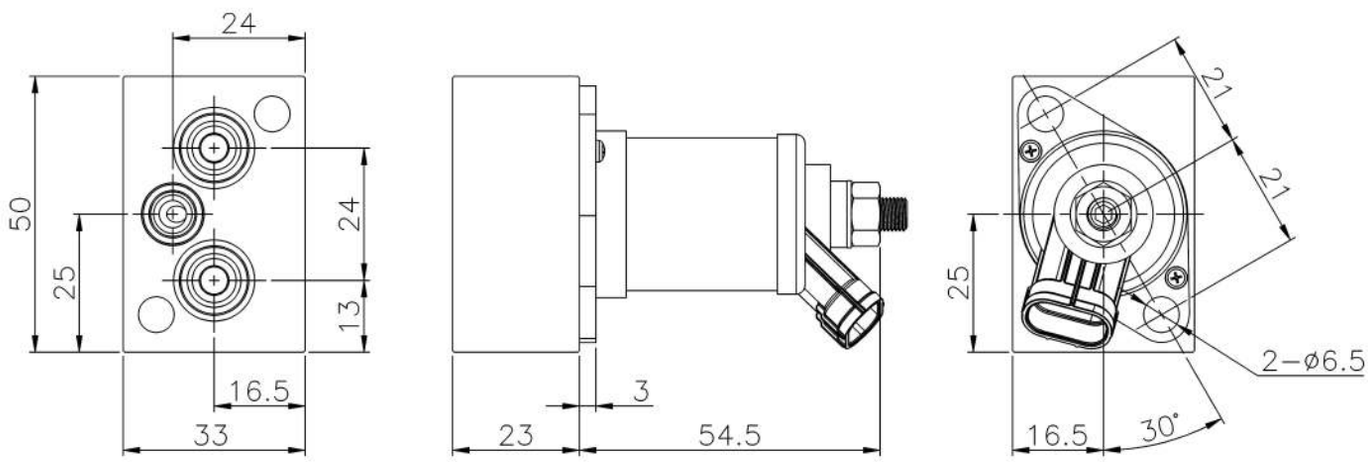

Proportional pressure reducing valve (HPR3P-40B1-201-M0)

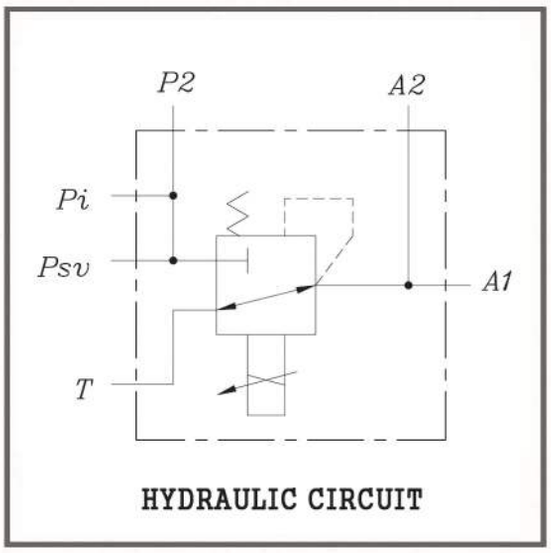



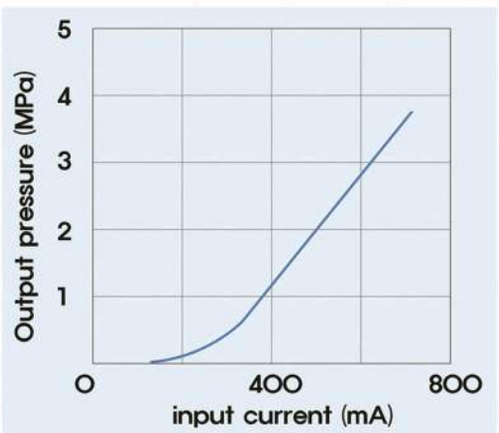

SPECIFICATIONS

1. CONTROL SPECIFICATION : POSITIVE PROPORTIONAL
2. SECOND PRESSURE/MAX. SET PRESSURE
   : 40Kgf/㎠ (3.9Mpa)
3. SOLENOID RATING : 0.75A for DC24V
4. COIL RESISTANCE(Ω) :13.5

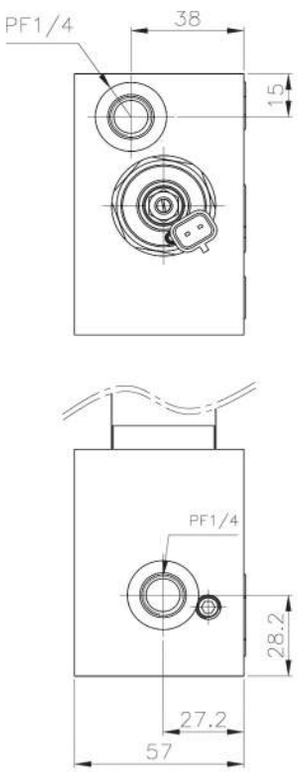

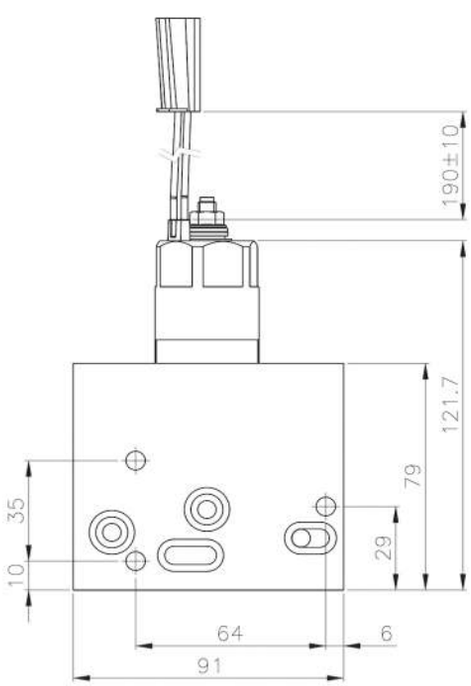

Proportional pressure reducing valve (HPR3S-40A1-201-M3)

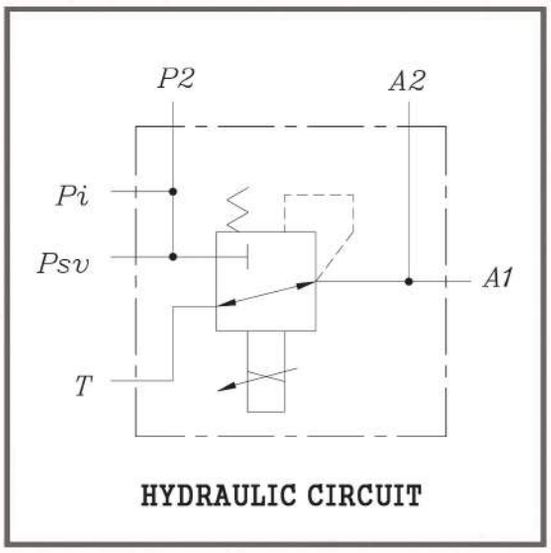

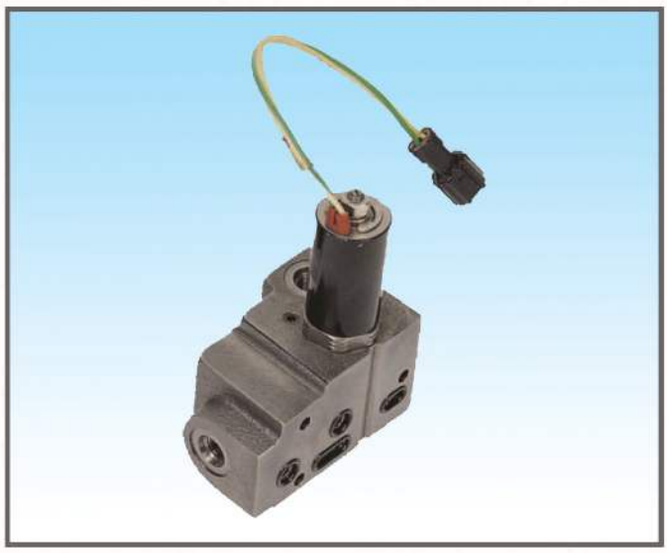

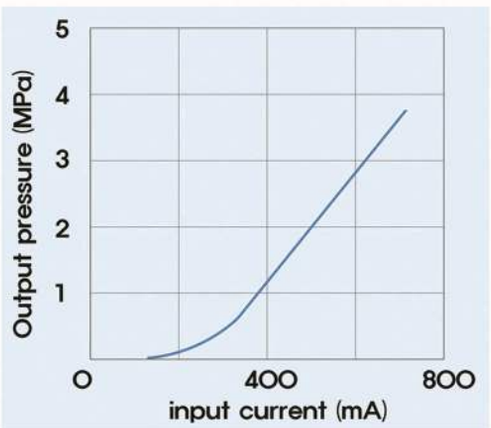

SPECIFICATIONS

1. CONTROL SPECIFICATION : POSITIVE PROPORTIONAL
2. SECOND PRESSURE/MAX. SET PRESSURE
   : 40Kgf/㎠ (3.9Mpa)
3. SOLENOID RATING : 0.75A for DC24V
4. COIL RESISTANCE(Ω) :17.5

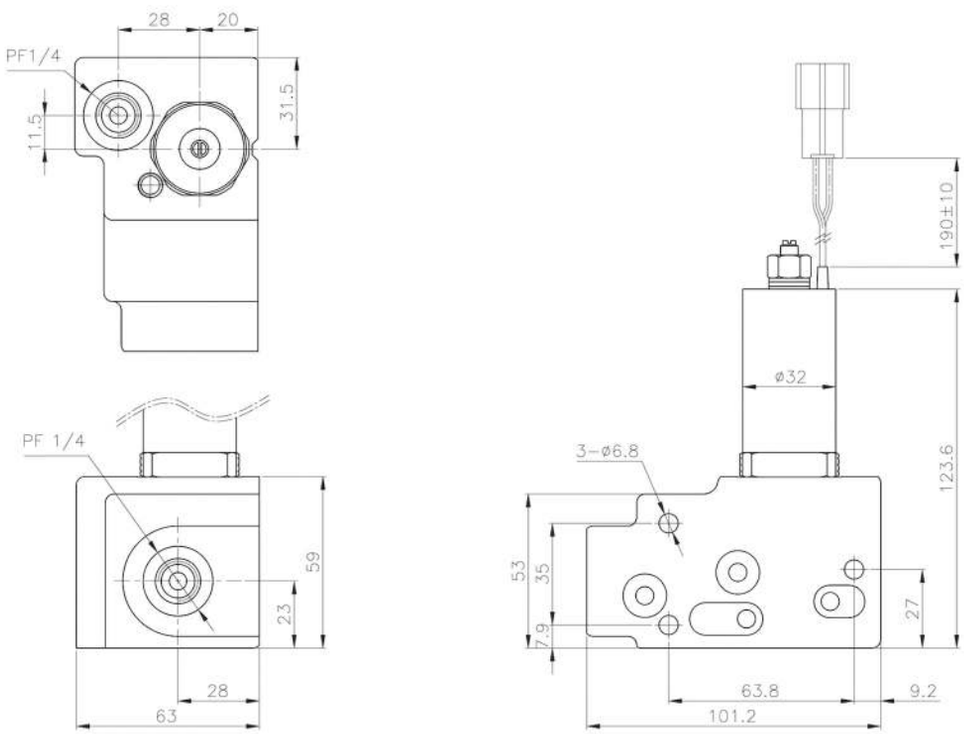

Proportional pressure reducing valve (HPR3SN-40A1-221)

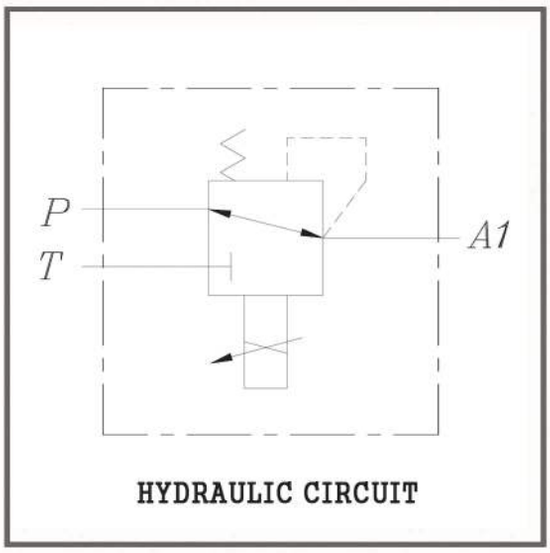



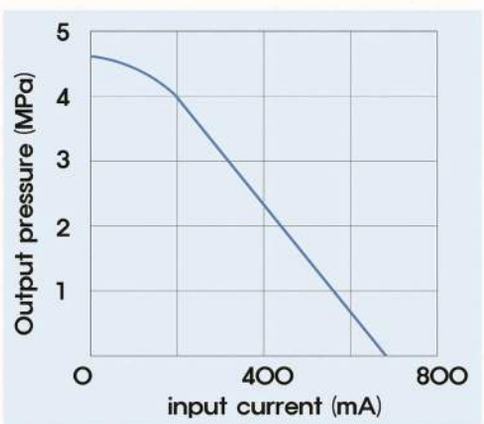

SPECIFICATIONS

1. CONTROL SPECIFICATION : NEGATIVE PROPORTIONAL
2. SECOND PRESSURE/MAX. SET PRESSURE
   : 40Kgf/㎠ (3.9Mpa)
3. SOLENOID RATING : 0.75A for DC24V
4. COIL RESISTANCE(Ω) :17.5

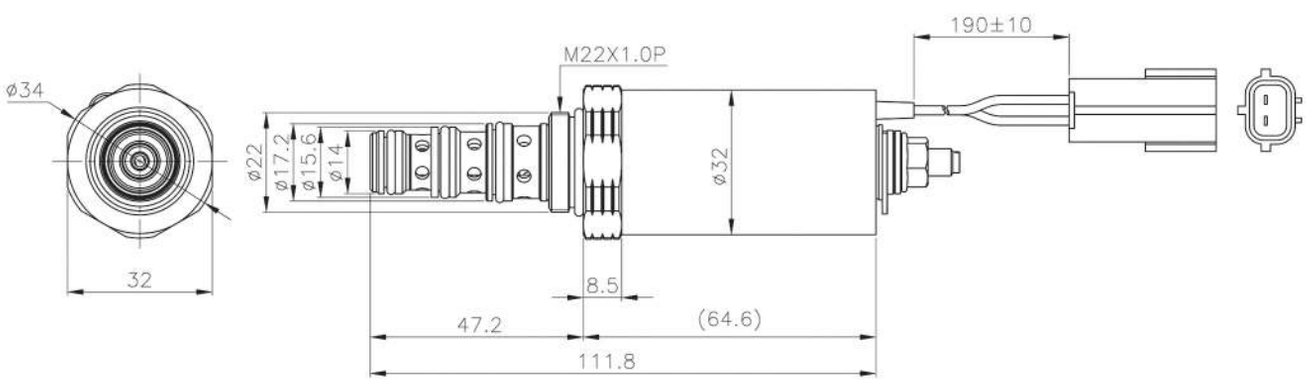

Proportional pressure reducing valve (HPR3S-40A1-201)

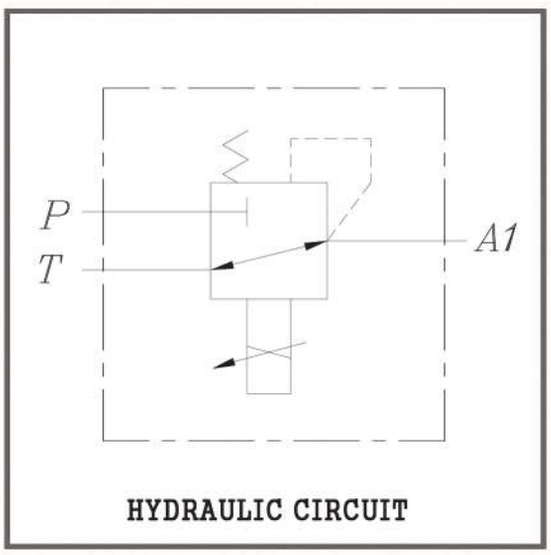

HYDRAULIC CIRCUIT



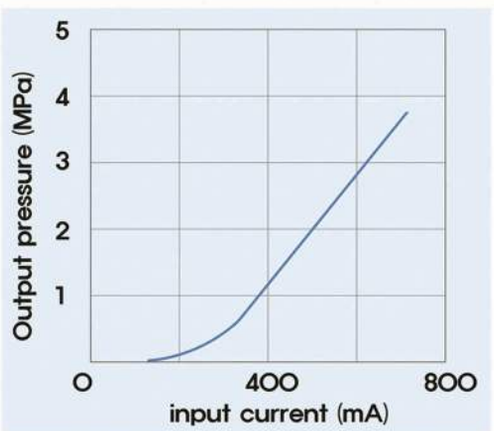

SPECIFICATIONS

1. CONTROL SPECIFICATION : POSITIVE PROPORTIONAL
2. SECOND PRESSURE/MAX. SET PRESSURE
   : 40Kgf/㎠ (3.9Mpa)
3. SOLENOID RATING : 0.75A for DC24V
4. COIL RESISTANCE(Ω) :17.5

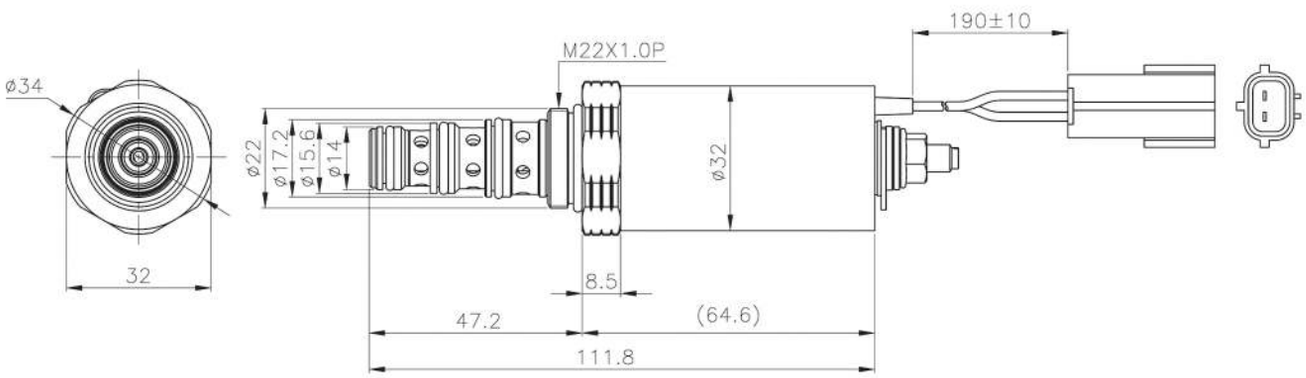

Proportional pressure reducing valve (HPR2P-30A1-201-M5)

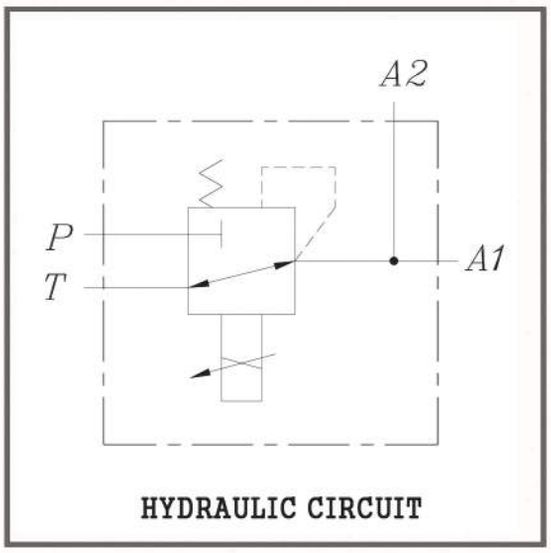



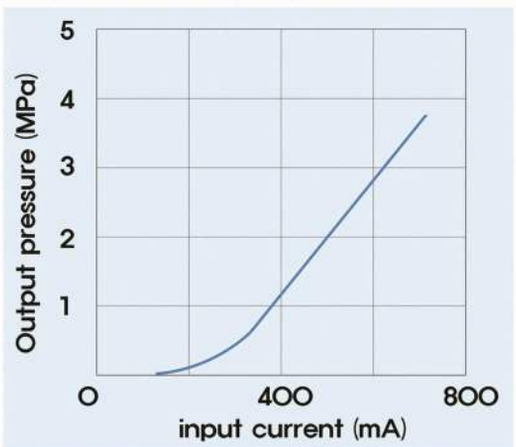

SPECIFICATIONS

1. CONTROL SPECIFICATION : POSITIVE PROPORTIONAL
2. SECOND PRESSURE/MAX. SET PRESSURE
   : 30Kgf/㎠ (2.9Mpa)
3. SOLENOID RATING : 0.75A for DC24V
4. COIL RESISTANCE(Ω) :17.5

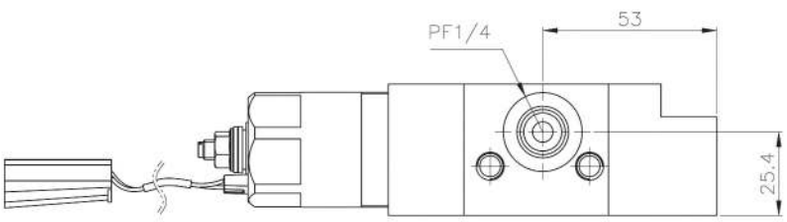

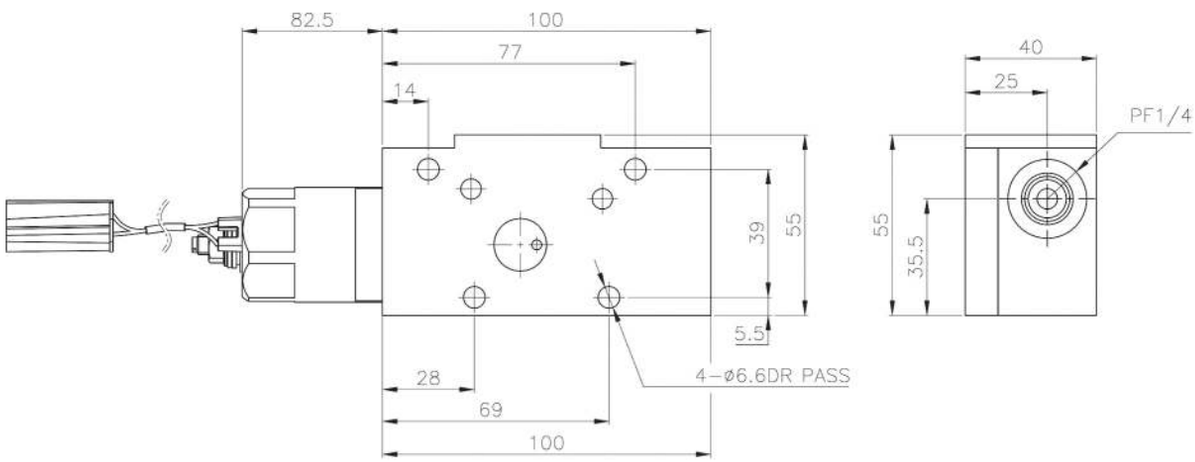

Proportional pressure reducing valve (HPR2P-30A1-201)

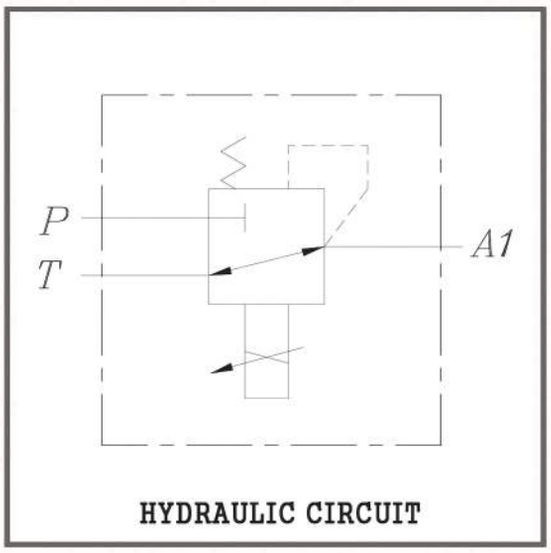

HYDRAULIC CIRCUIT



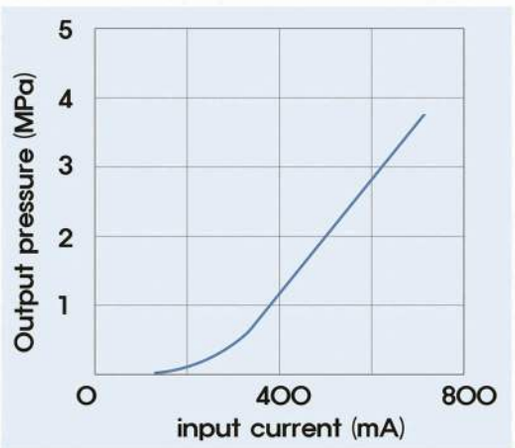

SPECIFICATIONS

1. CONTROL SPECIFICATION : POSITIVE PROPORTIONAL
2. SECOND PRESSURE/MAX. SET PRESSURE
   : 30Kgf/㎠ (2.9Mpa)
3. SOLENOID RATING : 0.75A for DC24V
4. COIL RESISTANCE(Ω) :17.5

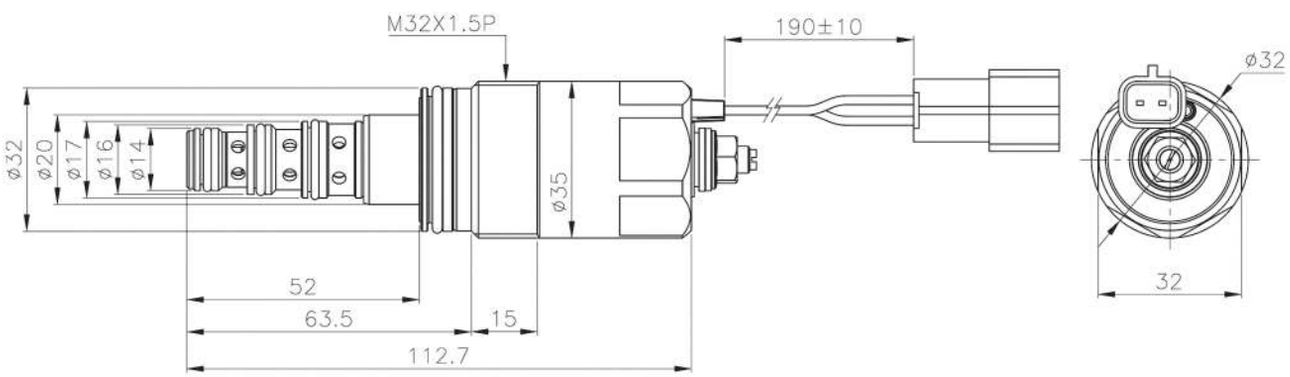

Proportional pressure reducing valve (HPR3B-40F1-212-FOR SBS120/140)

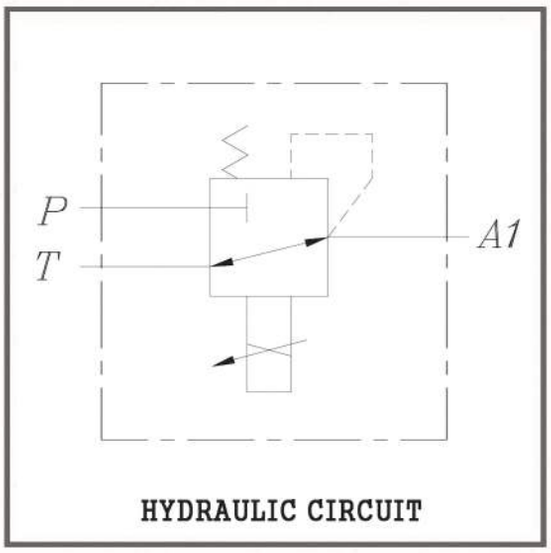

HYDRAULIC CIRCUIT



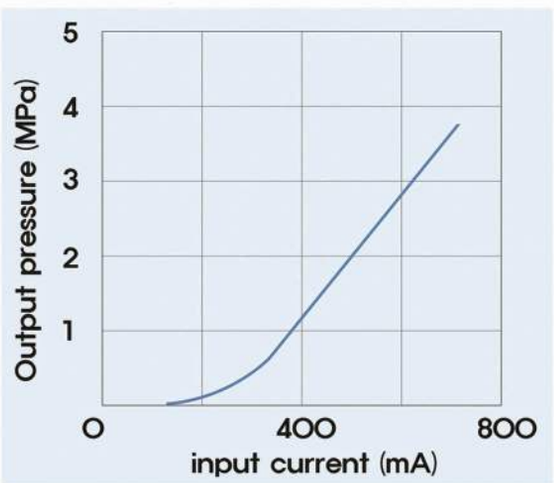

SPECIFICATIONS

1. CONTROL SPECIFICATION : POSITIVE PROPORTIONAL
2. SECOND PRESSURE/MAX. SET PRESSURE
   : 40Kgf/㎠ (3.9Mpa)
3. SOLENOID RATING : 0.75A for DC24V
4. COIL RESISTANCE(Ω) :12.5

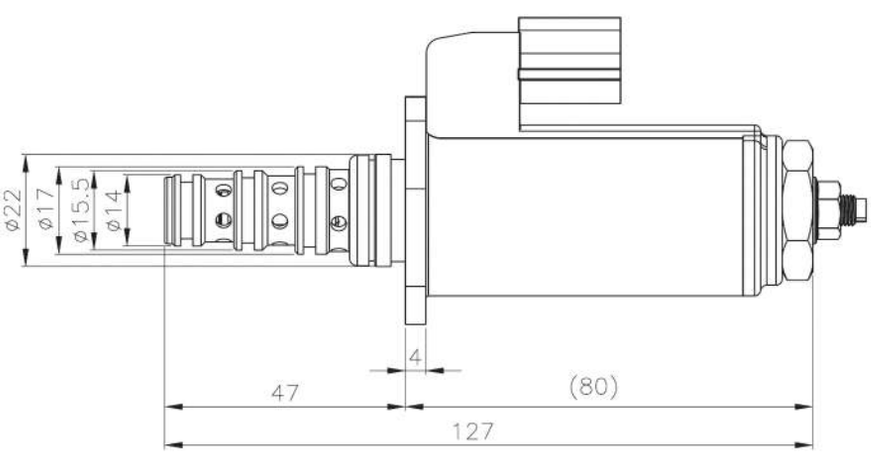

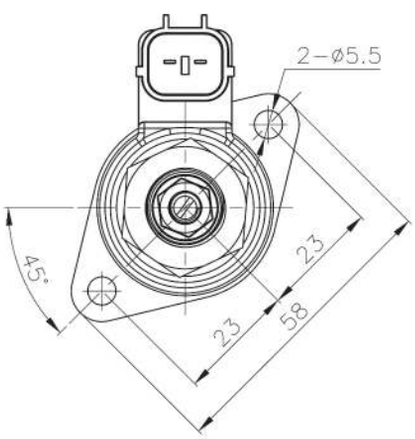

Proportional pressure reducing valve (HPR3S-40A1-201-M1)

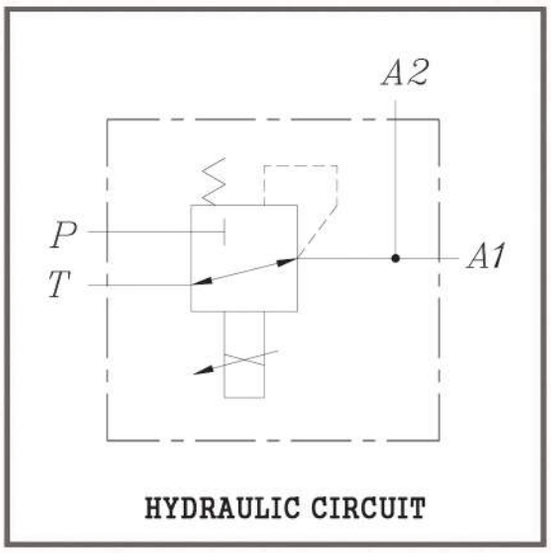



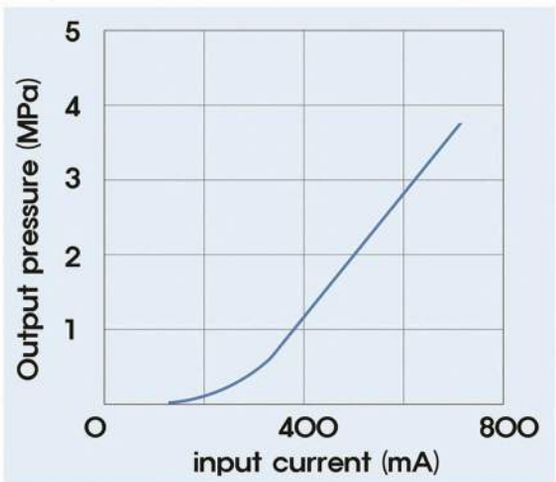

SPECIFICATIONS

1. CONTROL SPECIFICATION : POSITIVE PROPORTIONAL
2. SECOND PRESSURE/MAX. SET PRESSURE
   : 40Kgf/㎠ (3.9Mpa)
3. SOLENOID RATING : 0.75A for DC24V
4. COIL RESISTANCE(Ω) : 17.5

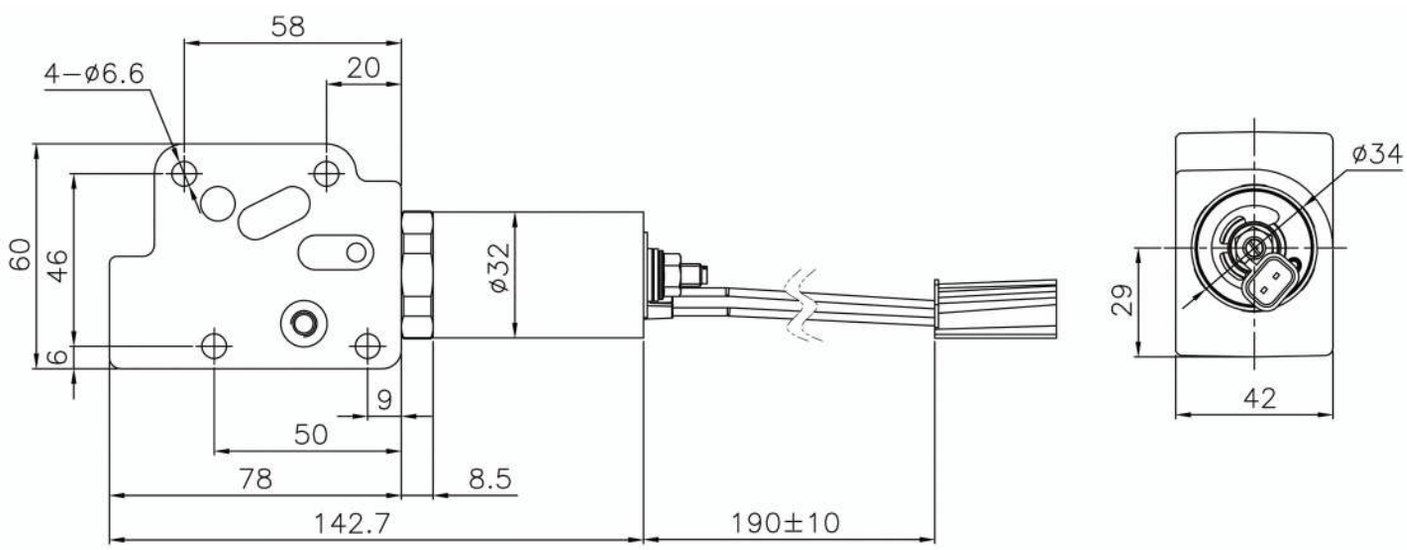

Proportional pressure reducing valve (HPR3B-30A2-211)

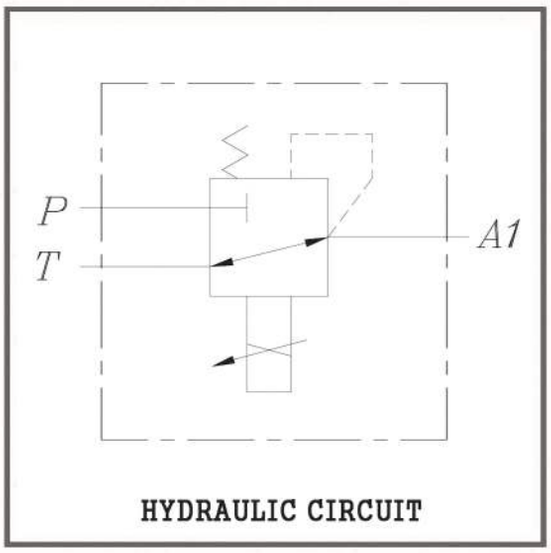

HYDRAULIC CIRCUIT



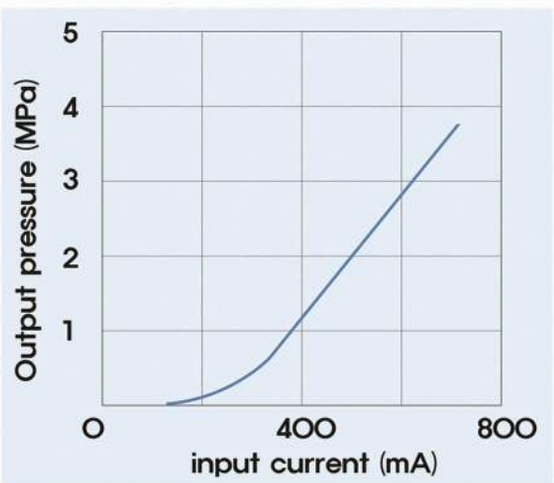

SPECIFICATIONS

1. CONTROL SPECIFICATION : POSITIVE PROPORTIONAL
2. SECOND PRESSURE/MAX. SET PRESSURE
   : 30Kgf/㎠ (2.9Mpa)
3. SOLENOID RATING : 0.75A for DC24V
4. COIL RESISTANCE(Ω) :17.5

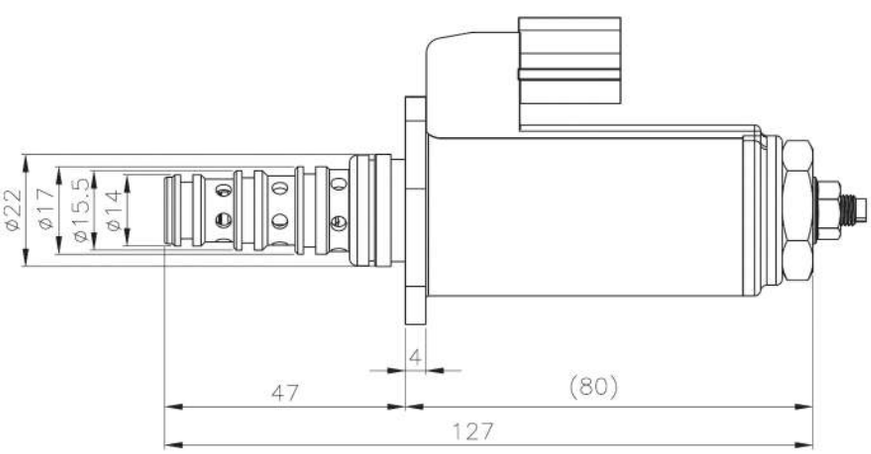

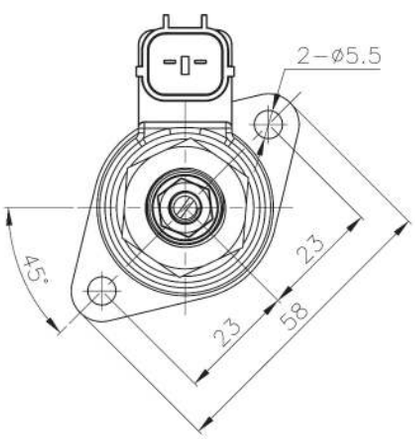

Proportional pressure reducing valve (HPR3Q-40A1-201-M2)

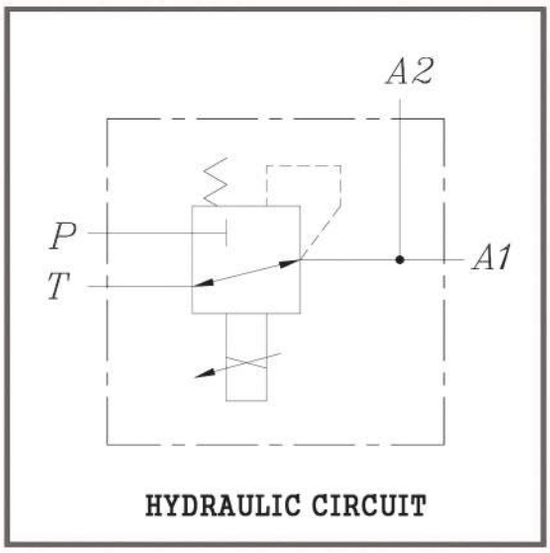

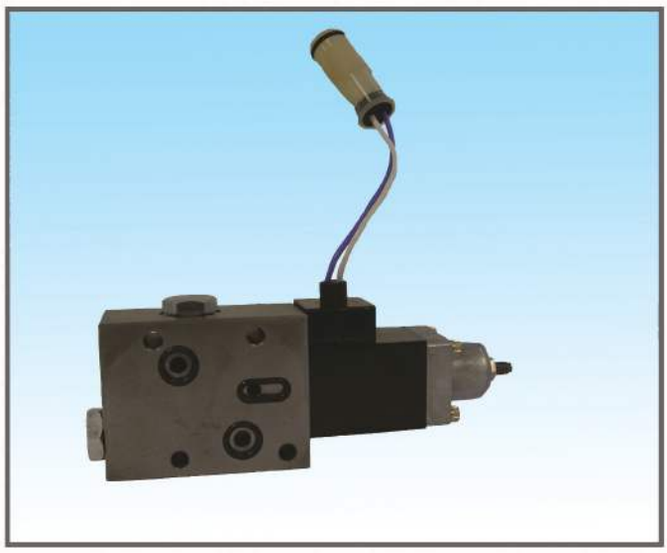

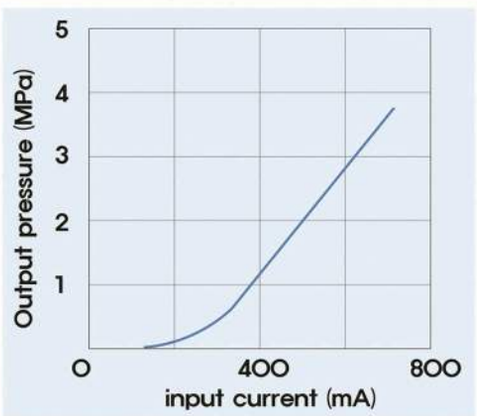

SPECIFICATIONS

1. CONTROL SPECIFICATION : POSITIVE PROPORTIONAL
2. SECOND PRESSURE/MAX. SET PRESSURE
   : 40Kgf/㎠ (3.9Mpa)
3. SOLENOID RATING : 0.75A for DC24V
4. COIL RESISTANCE(Ω) : 17.5

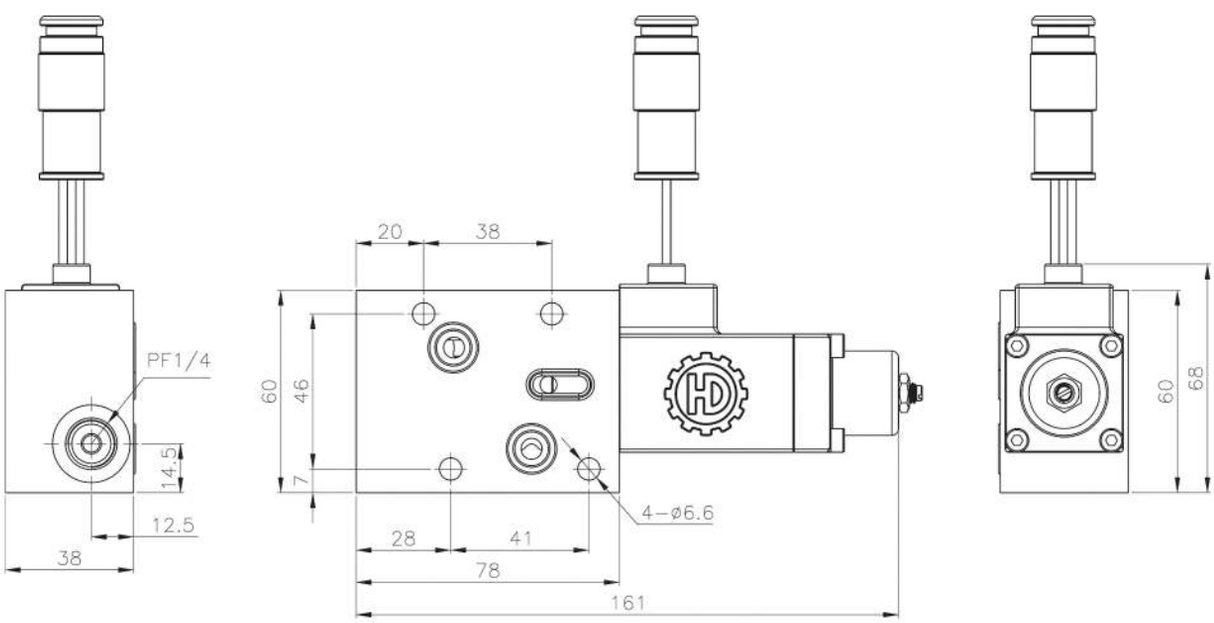

Proportional pressure reducing valve (HPR3B-30A-211-M4)

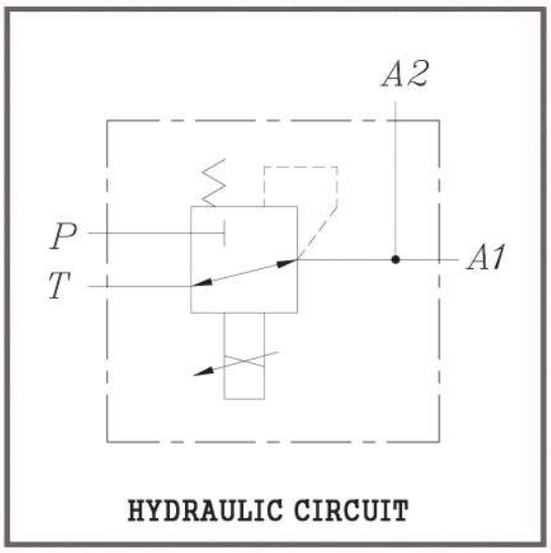

HYDRAULIC CIRCUIT

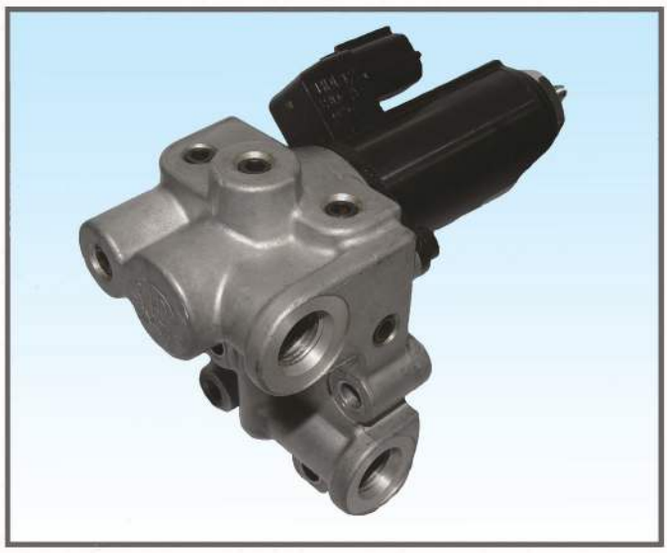

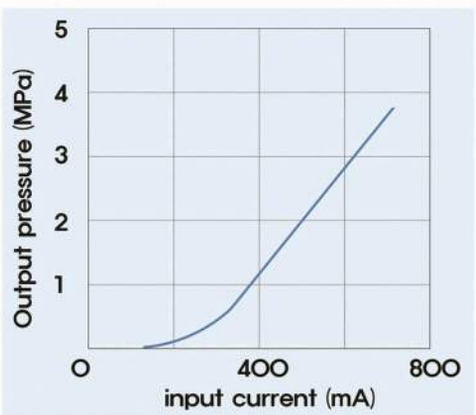

SPECIFICATIONS

1. CONTROL SPECIFICATION : POSITIVE PROPORTIONAL
2. SECOND PRESSURE/MAX. SET PRESSURE
   : 30Kgf/㎠ (2.9Mpa)
3. SOLENOID RATING : 0.75A for DC24V
4. COIL RESISTANCE(Ω) :17.5

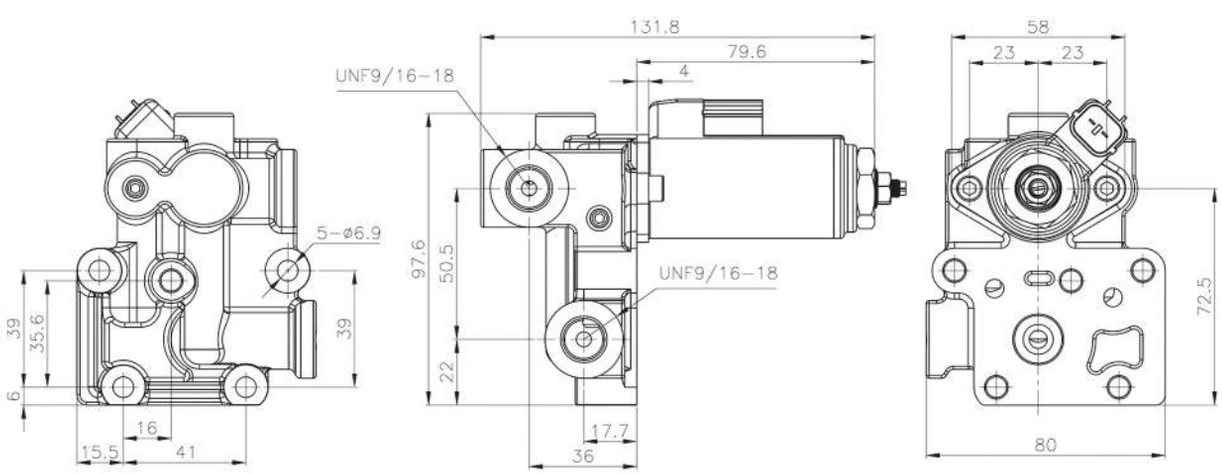

Proportional pressure reducing valve (HPR2BN-40D1-241-FOR HPVO102/105 HITACHI TYPE)

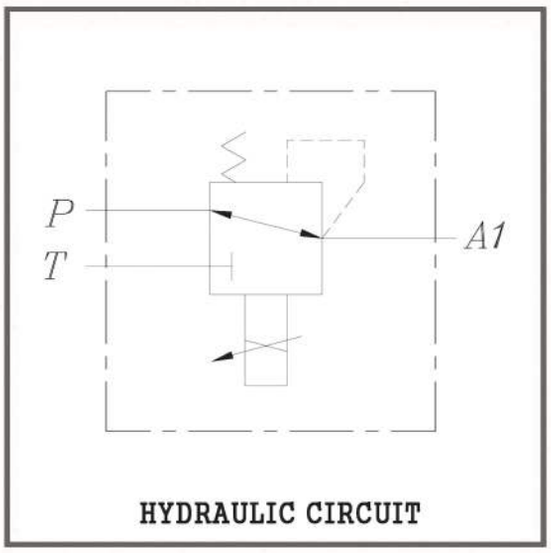

HYDRAULIC CIRCUIT

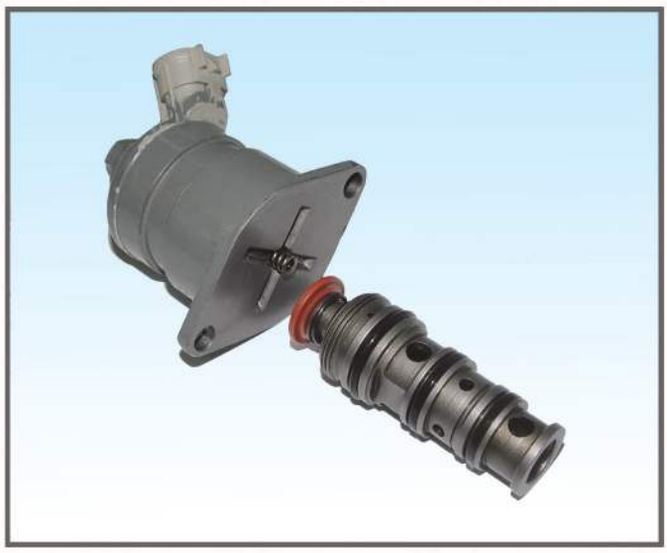

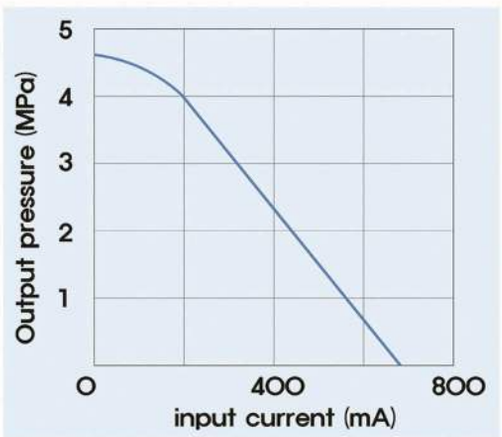

SPECIFICATIONS

1. CONTROL SPECIFICATION :NEGATIVEPROPORTIONAL
2. SECOND PRESSURE/MAX. SET PRESSURE
   : 40Kgf/㎠ (3.9Mpa)
3. SOLENOID RATING : 0.75A for DC24V
4. COIL RESISTANCE(Ω) : 24

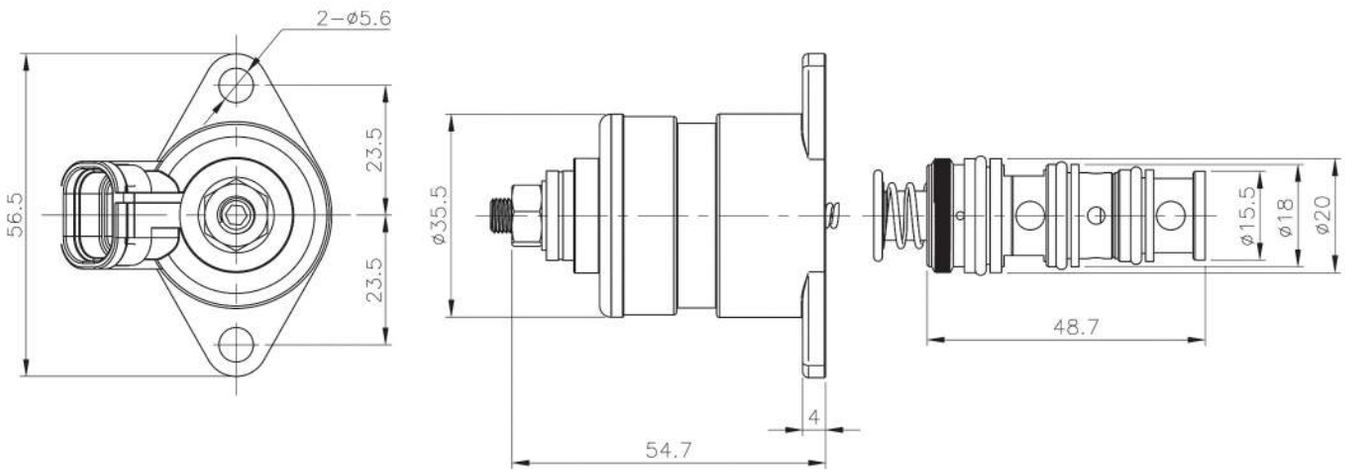

Proportional pressure reducing valve (HPR2BN-40E2-242-FOR HPVO118 HITACHI TYPE)

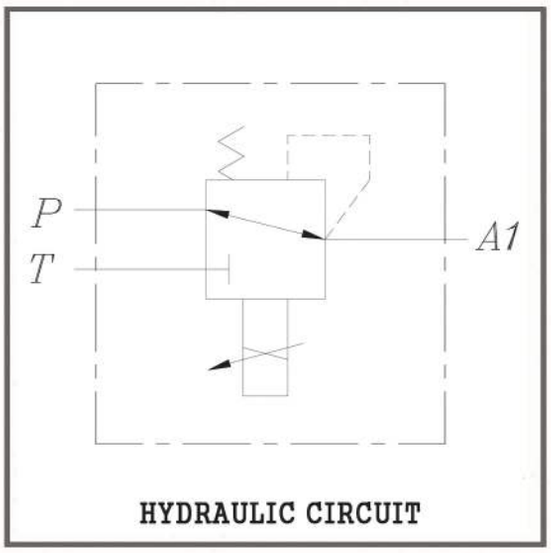

HYDRAULIC CIRCUIT



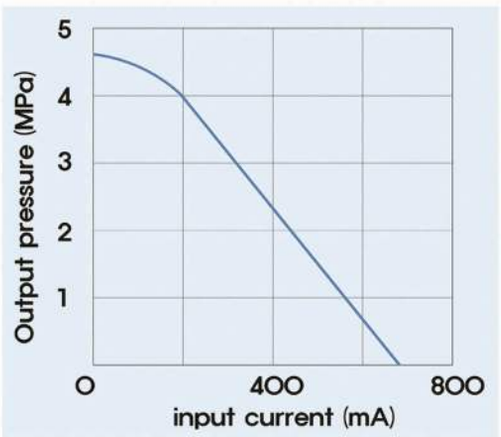

SPECIFICATIONS

1. CONTROL SPECIFICATION : NEGATIVE PROPORTIONAL
2. SECOND PRESSURE/MAX. SET PRESSURE
   : 40Kgf/㎠ (3.9Mpa)
3. SOLENOID RATING : 0.65A for DC24V
4. COIL RESISTANCE(Ω) : 20

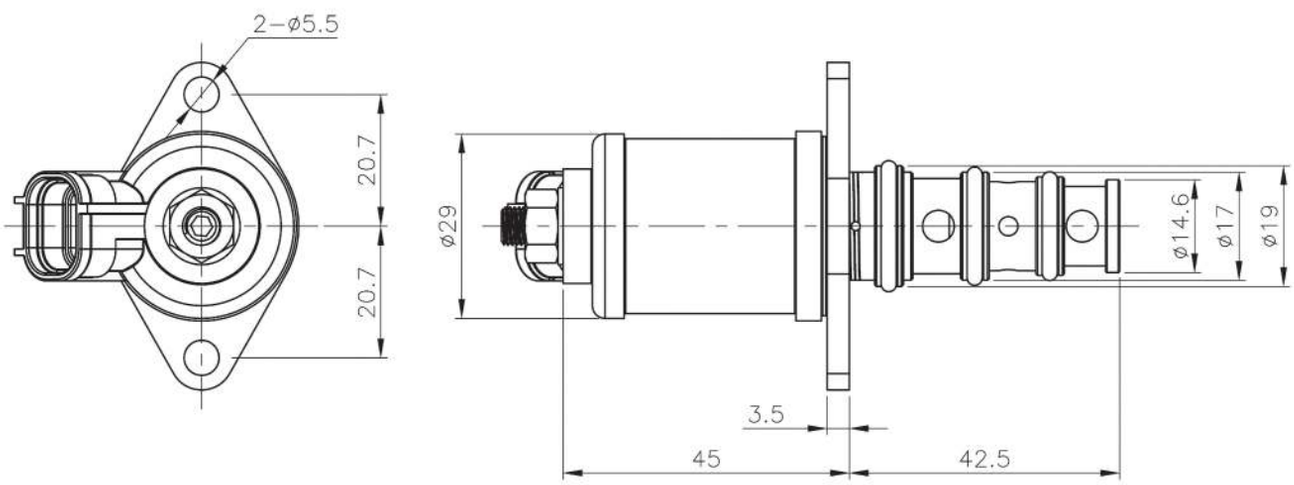

Proportional pressure reducing valve (HPR3B-30A2-211-M6)

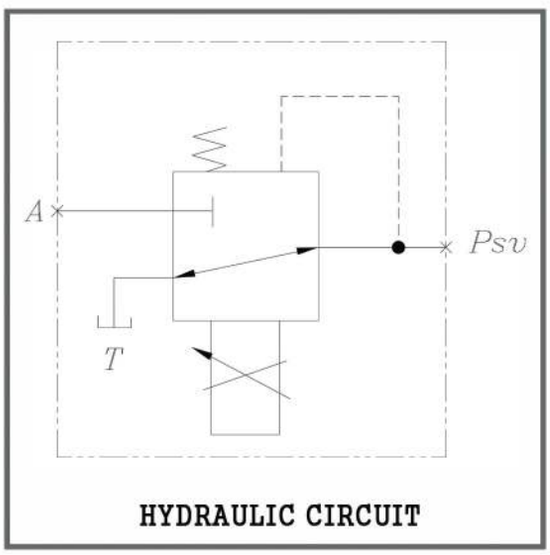

HYDRAULIC CIRCUIT



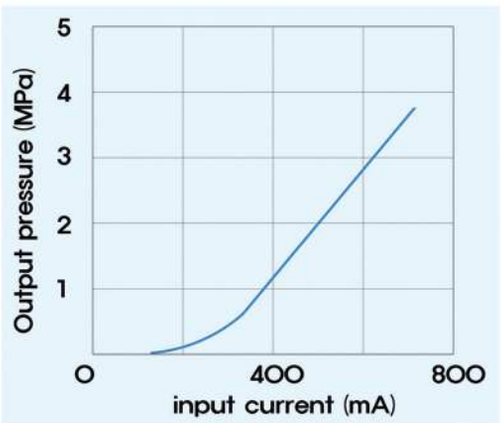

SPECIFICATIONS

1. CONTROL SPECIFICATION : POSITIVE PROPORTIONAL
2. SECOND PRESSURE/MAX. SET PRESSURE
   : 30Kgf/㎠ (2.9Mpa)
3. SOLENOID RATING : 0.75A for DC24V
4. COIL RESISTANCE(Ω) :17.5

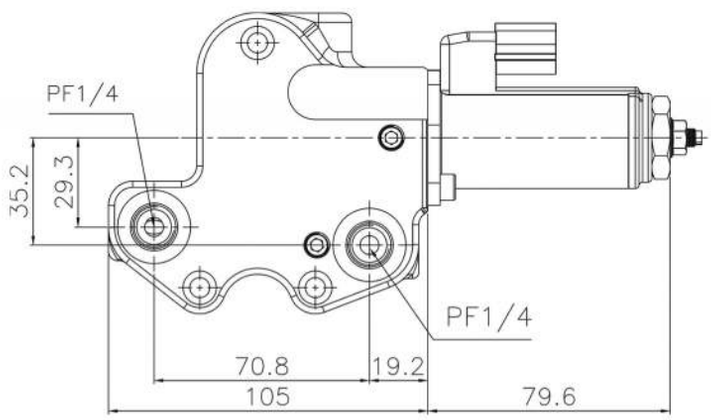

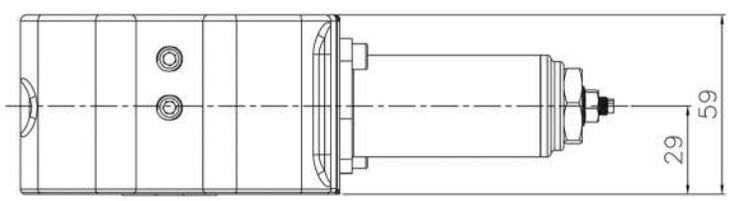

Proportional pressure reducing valve (HPR3SN-40A1-221-M6)

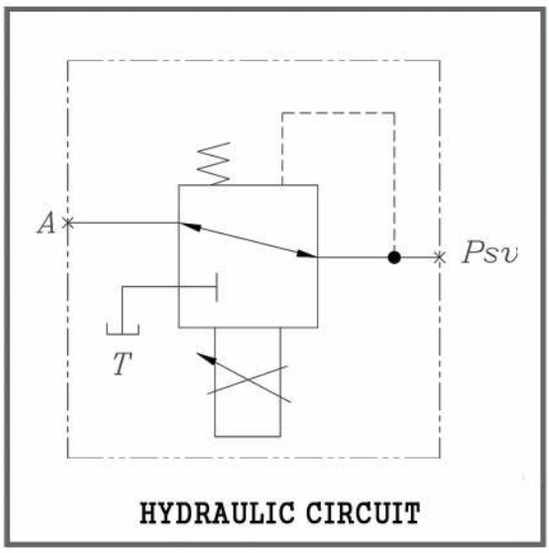

HYDRAULIC CIRCUIT

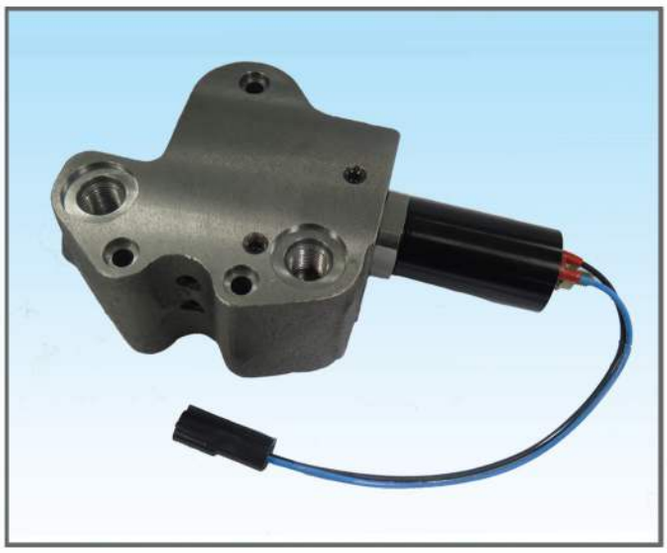

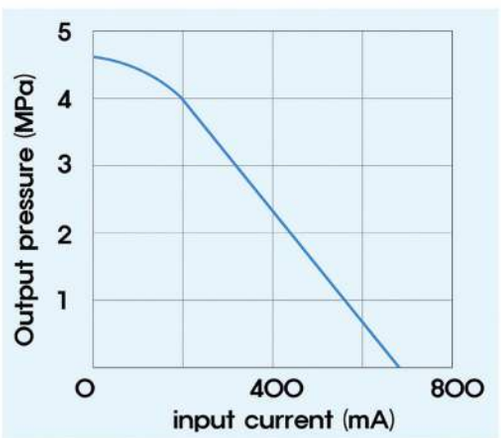

SPECIFICATIONS

1. CONTROL SPECIFICATION : NEGATIVE PROPORTIONAL
2. SECOND PRESSURE/MAX. SET PRESSURE
   : 40Kgf/㎠ (3.9Mpa)
3. SOLENOID RATING : 0.75A for DC24V
4. COIL RESISTANCE(Ω) : 17.5

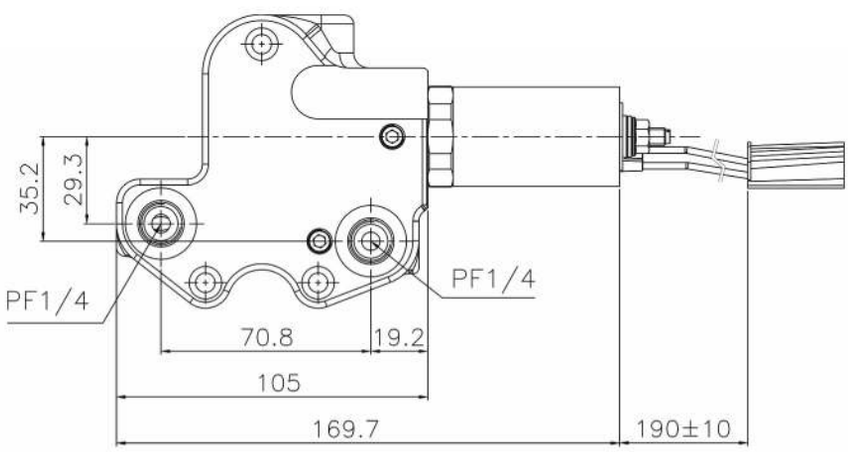

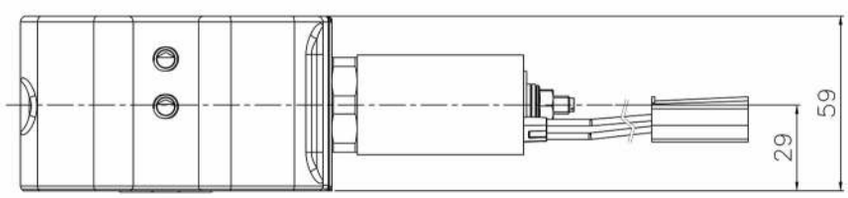

Proportional pressure reducing valve (HPR3B-30A1-201)

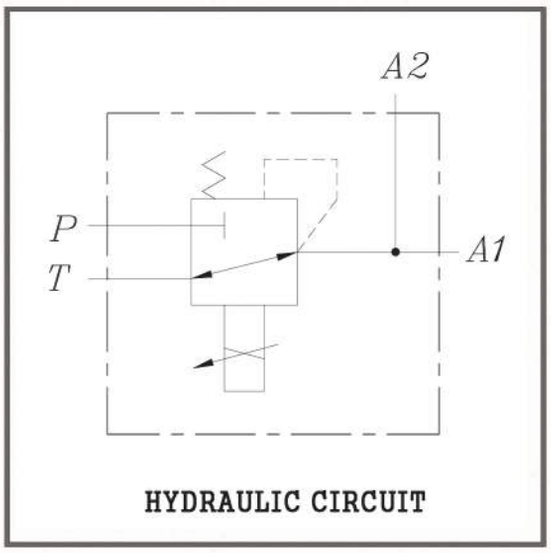



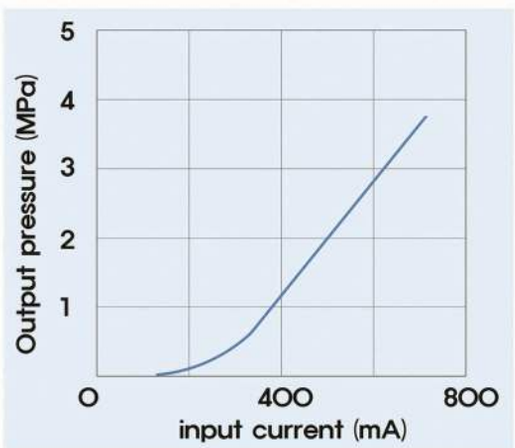

SPECIFICATIONS

1. CONTROL SPECIFICATION : POSITIVE PROPORTIONAL
2. SECOND PRESSURE/MAX. SET PRESSURE
   : 30Kgf/㎠ (2.9Mpa)
3. SOLENOID RATING : 0.75A for DC24V
4. COIL RESISTANCE(Ω) :17.5

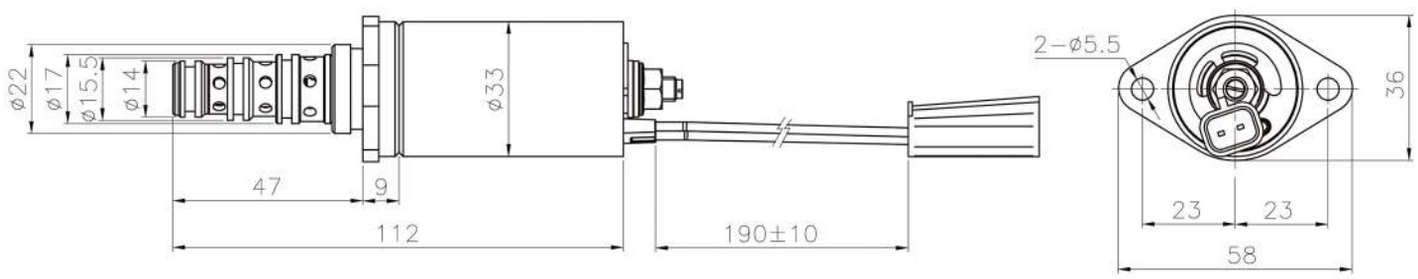

Proportional pressure reducing valve (HPR3BN-30A1-201)

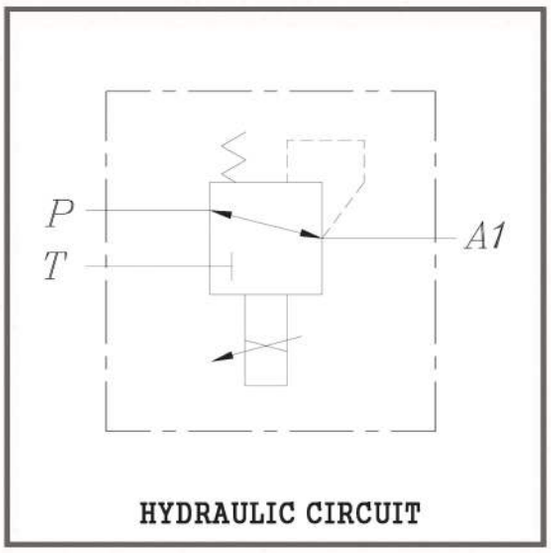

HYDRAULIC CIRCUIT



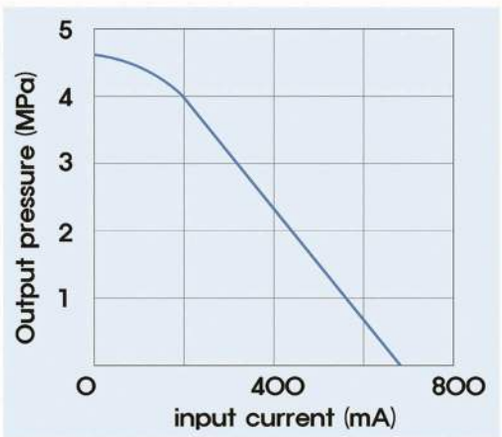

SPECIFICATIONS

1. CONTROL SPECIFICATION : NEGATIVE PROPORTIONAL
2. SECOND PRESSURE/MAX. SET PRESSURE
   : 30Kgf/㎠ (2.9Mpa)
3. SOLENOID RATING : 0.75A for DC24V
4. COIL RESISTANCE(Ω) :17.5

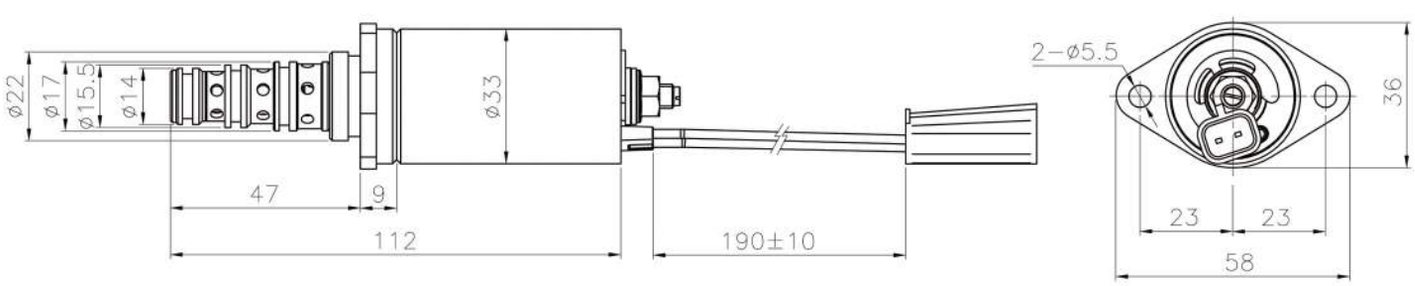

HYDRAULIC CIRCUIT

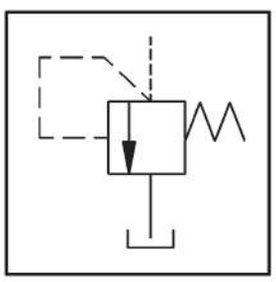



UCHIDA SERIES

(A8V55 / A8V80 / A8V86 / A8V107 / A8V115 / A8V172 / A8V200)

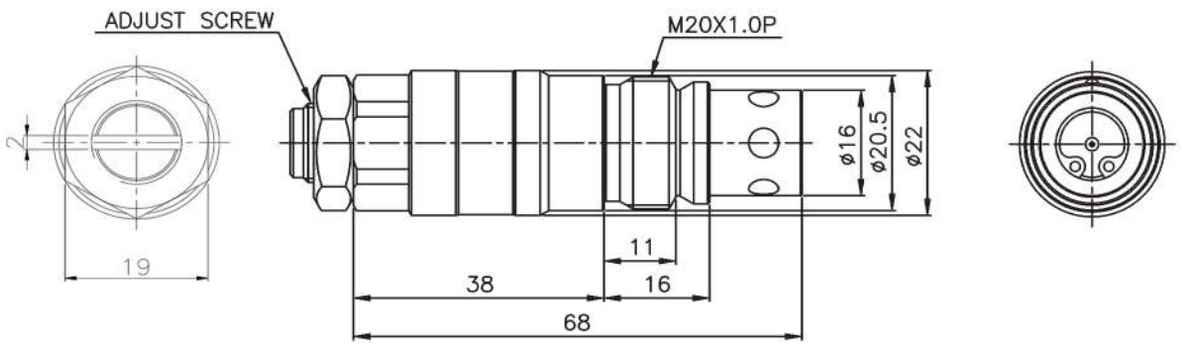

KAWASAKI SERIES

(H3V63 / H3V112 / H3V140 / H3V180)
(H5V80 / H5V140 / H5V160 / H5V200)

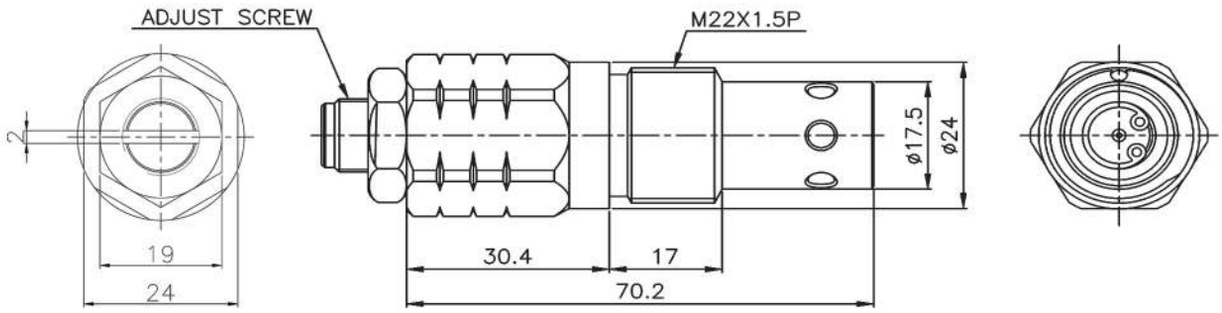

HYDRAULIC CIRCUIT

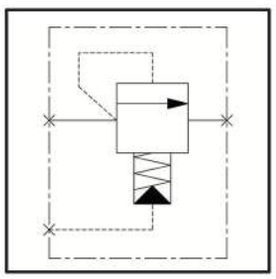



EX200-5 MAIN RELIEF VALVE

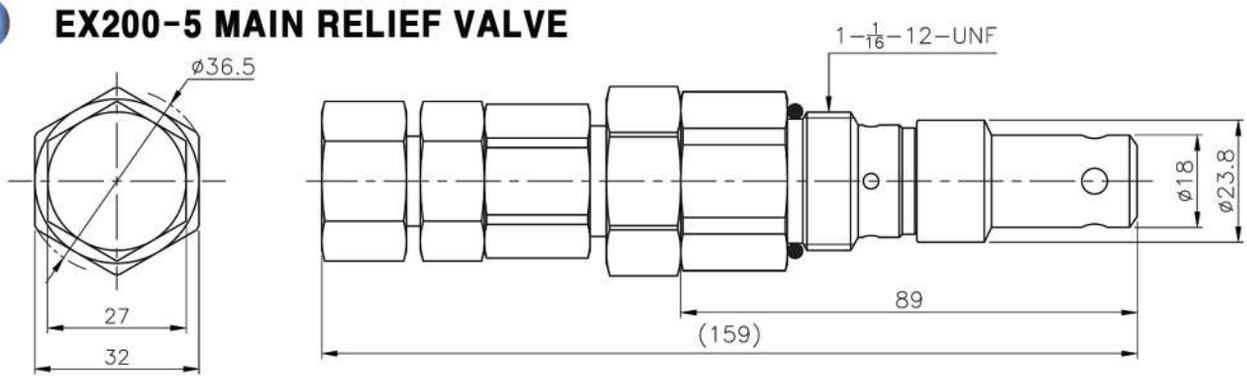

PC200-5 MAIN RELIEF VALVE

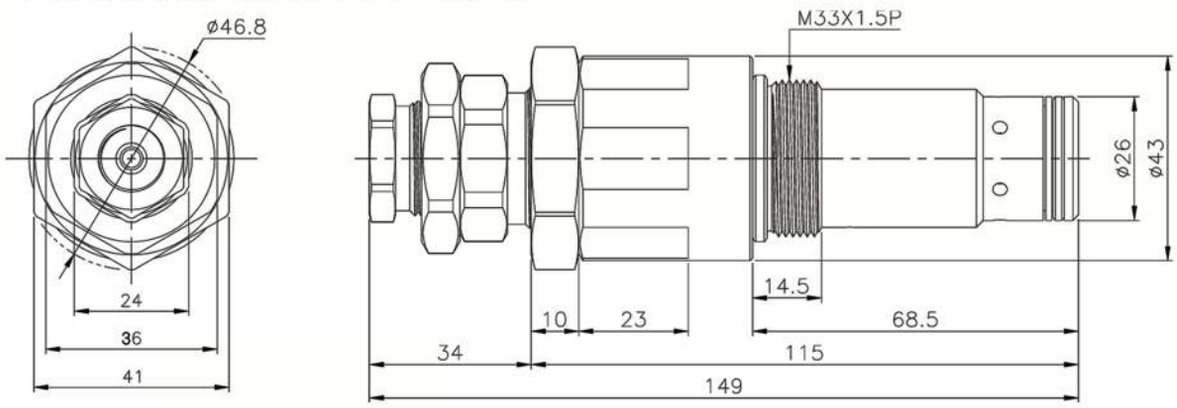

PC200-6 MAIN RELIEF VALVE

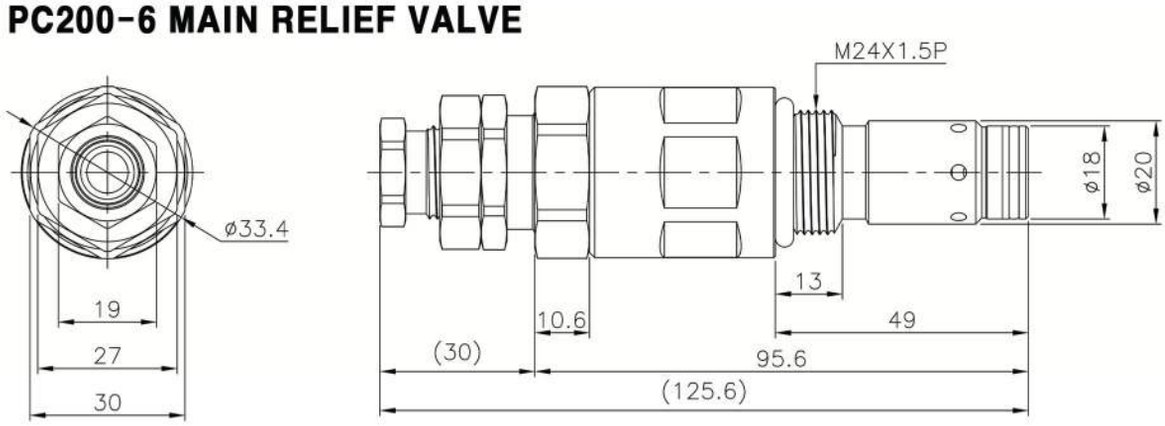



PC200-7 UNLOAD VALVE

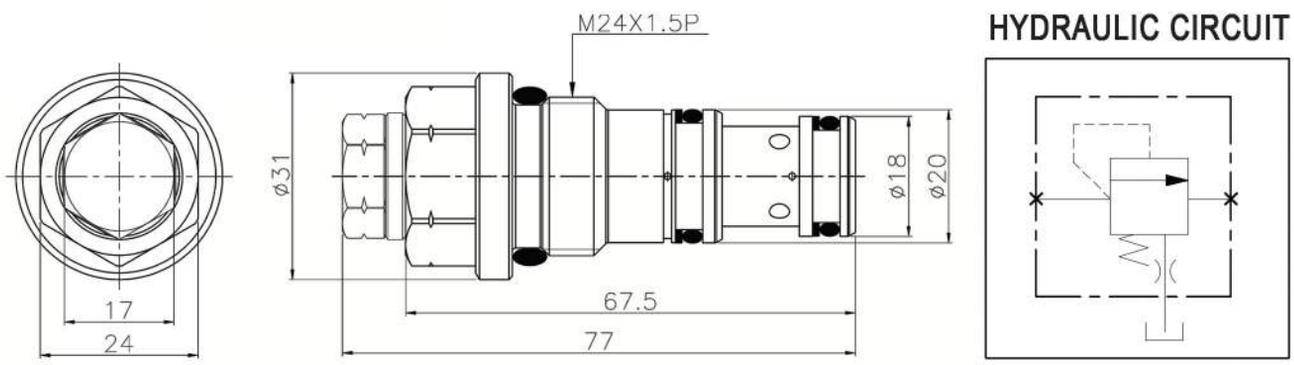

PC200-3 MAIN RELIEF VALVE

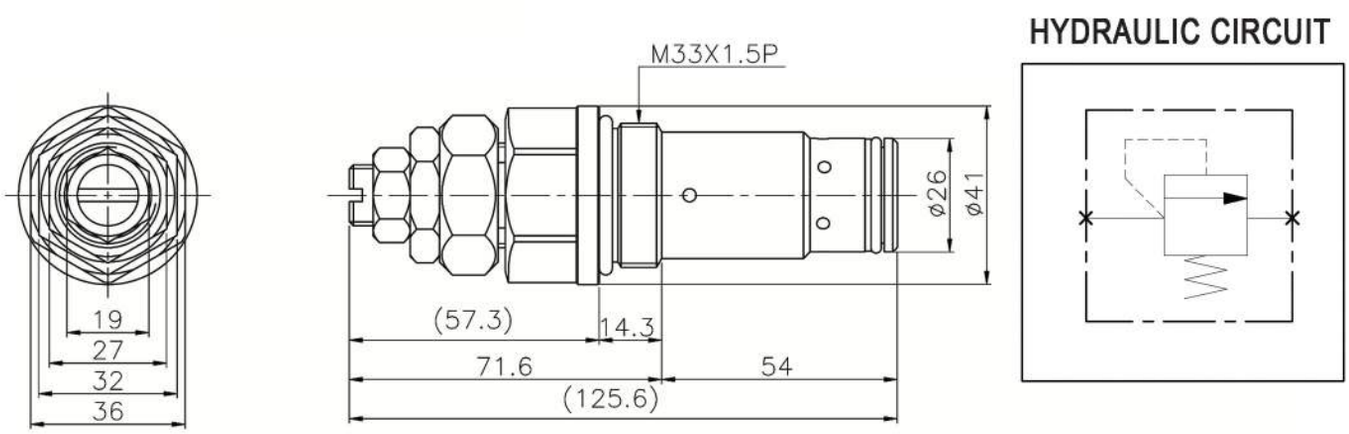

SOLENOID VALVE(PSVD2 SERIES-2STAGE)

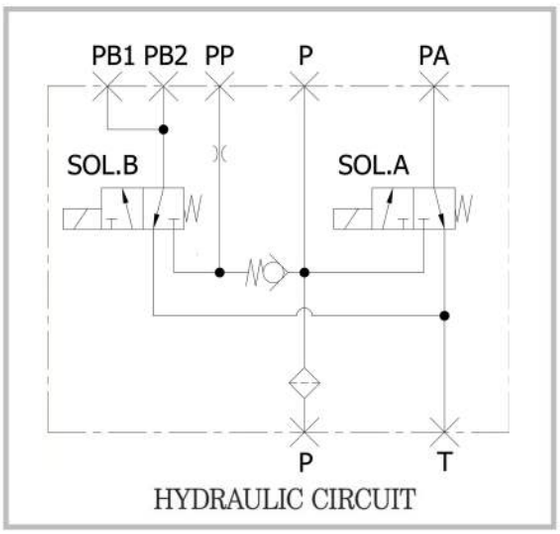

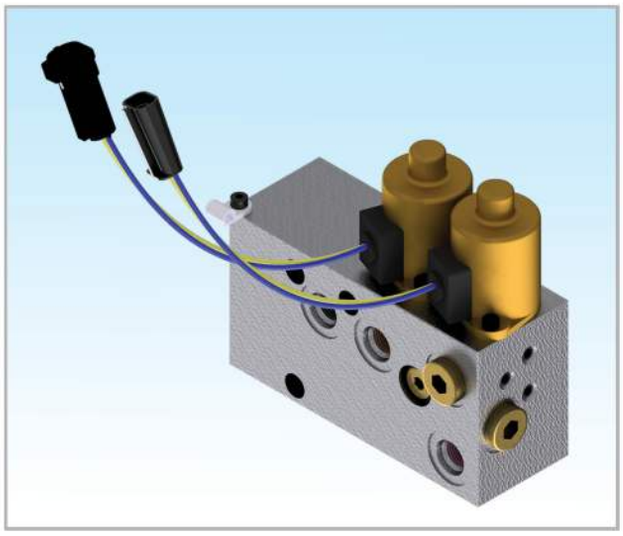

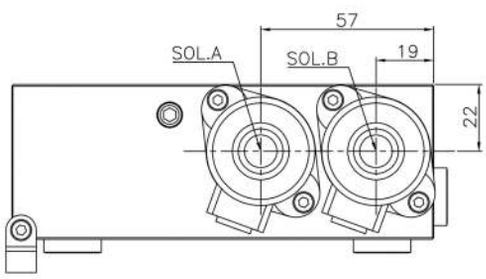

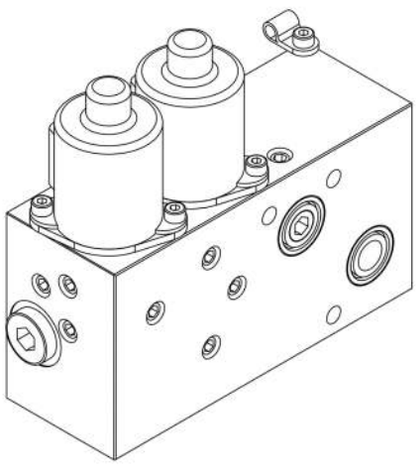

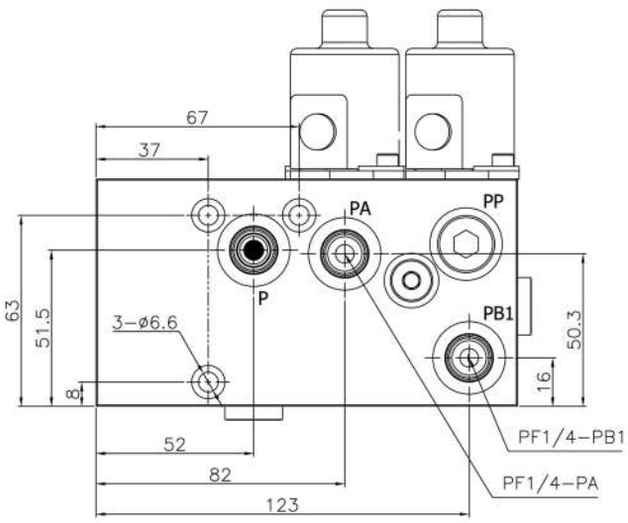

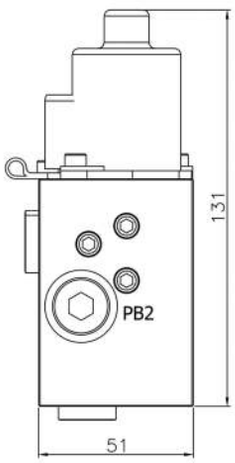

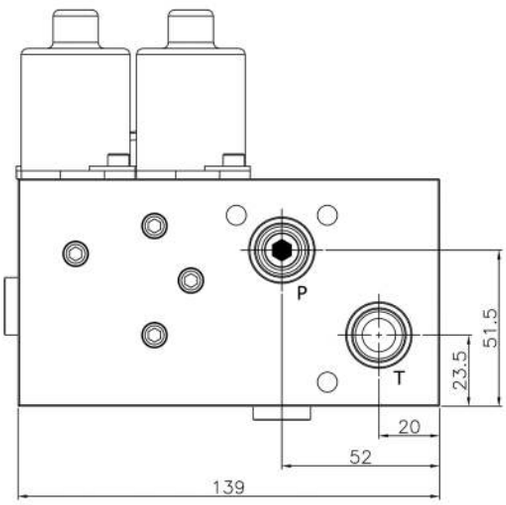

SOLENOID VALVE(PSVD2 SERIES-3STAGE)

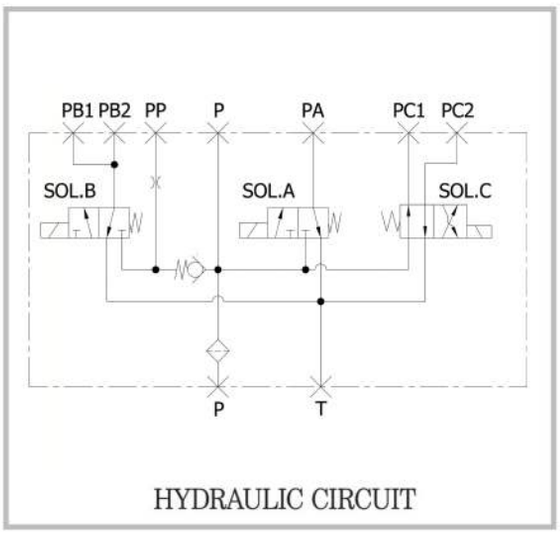

HYDRAULIC CIRCUIT

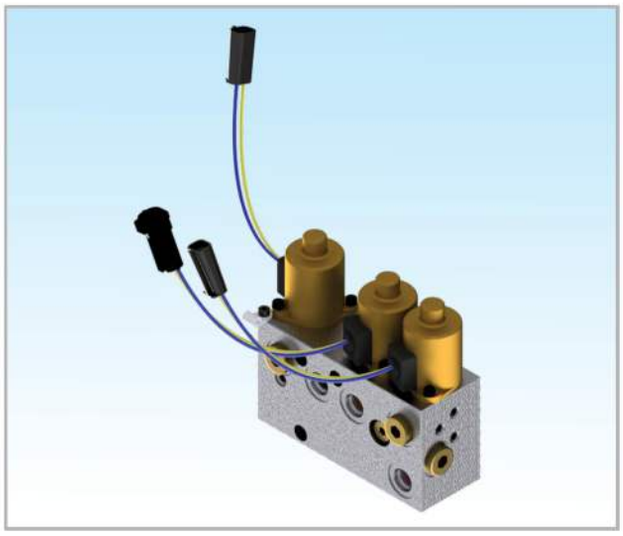

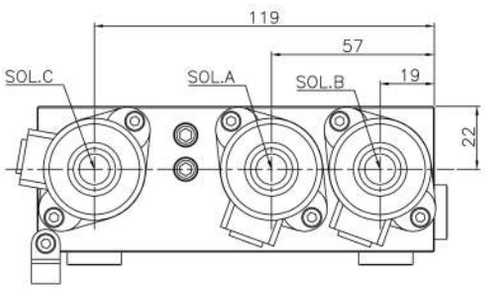

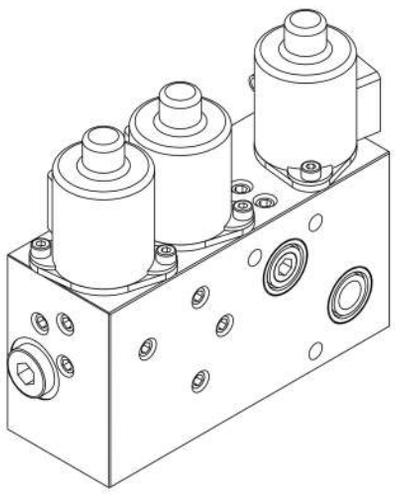

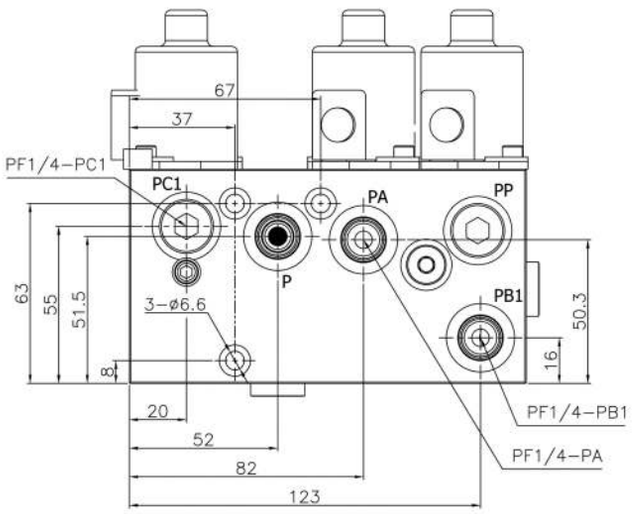

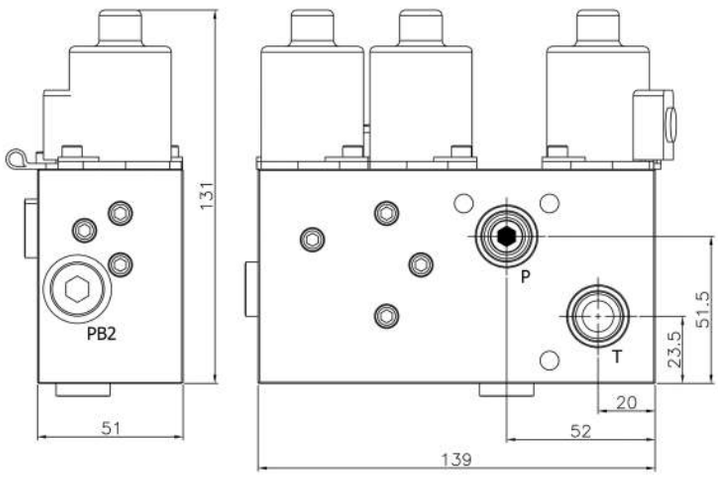

SOLENOID VALVE(PVD SERIES-2STAGE)

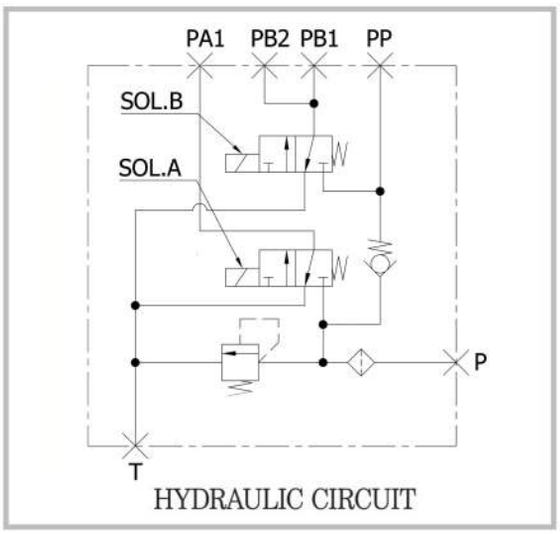

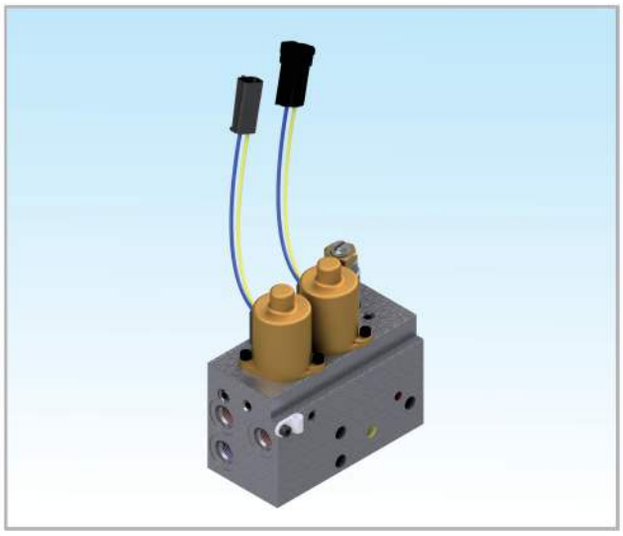

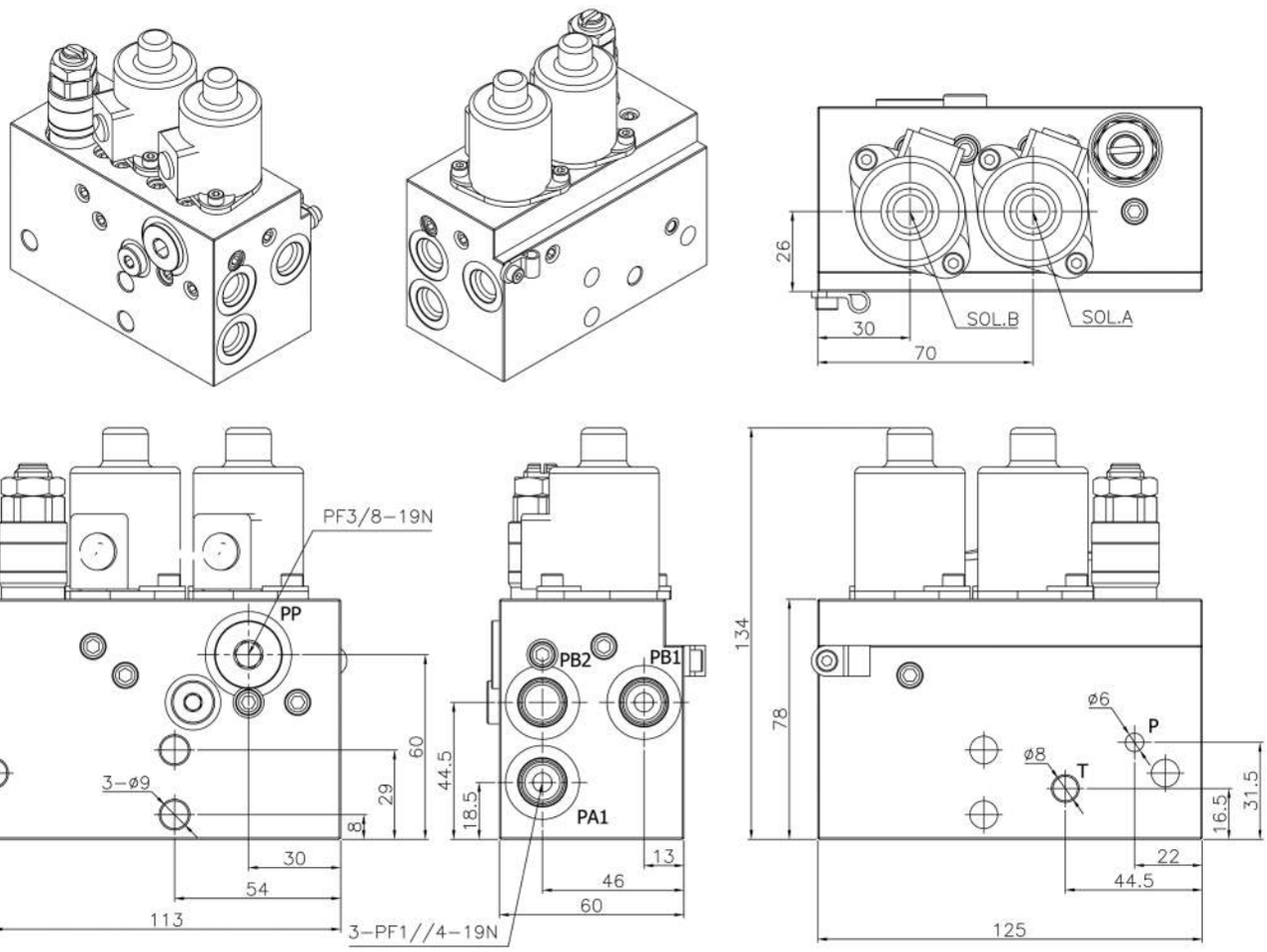

SELF REDUCING VALVE FOR KOMATSU (4-BOLT TYPE)

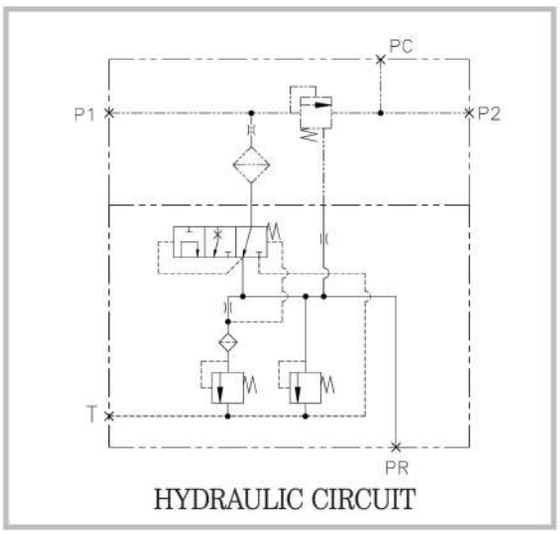

HYDRAULIC CIRCUIT



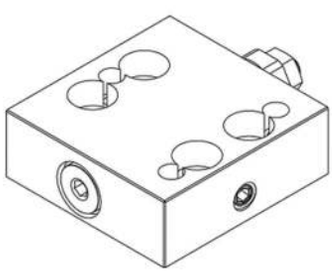

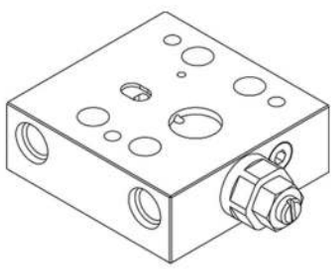

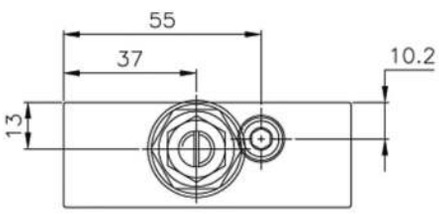

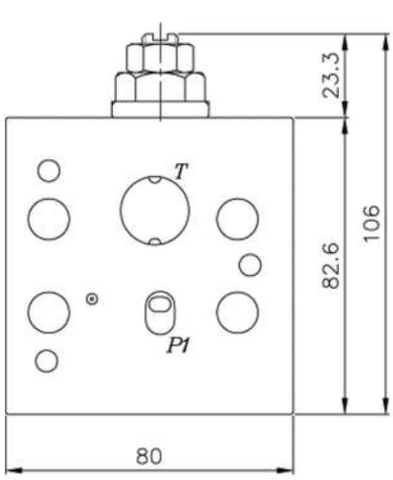

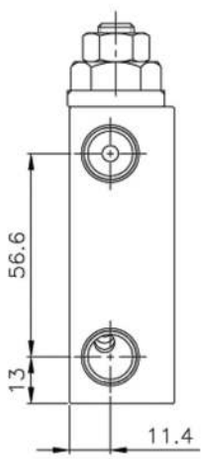

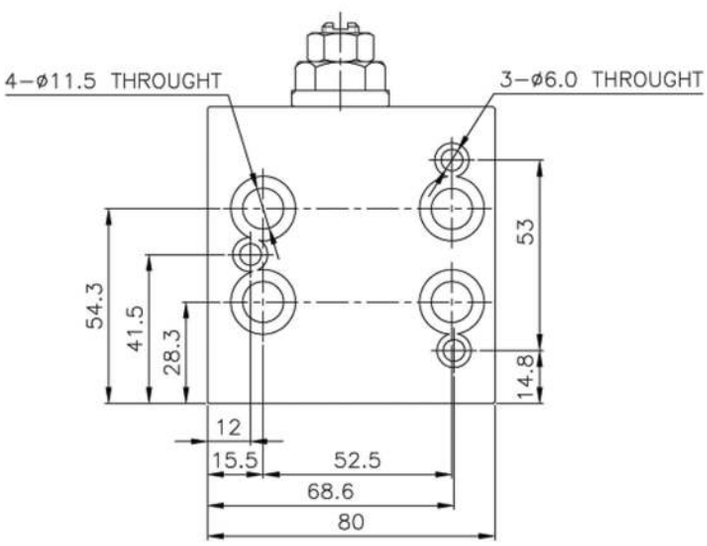

SELF REDUCING VALVE FOR KOMATSU (3-BOLT TYPE)

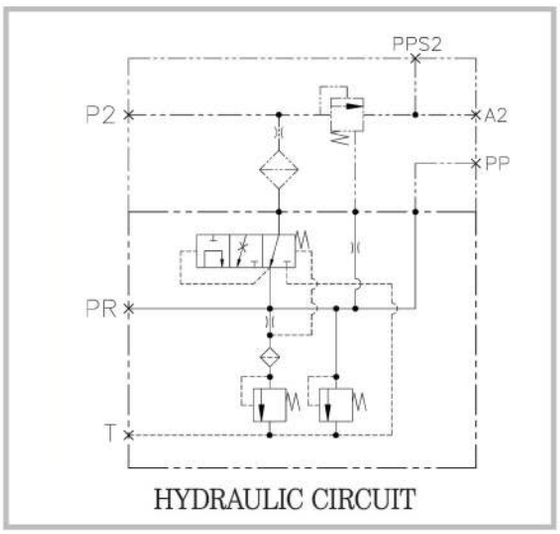



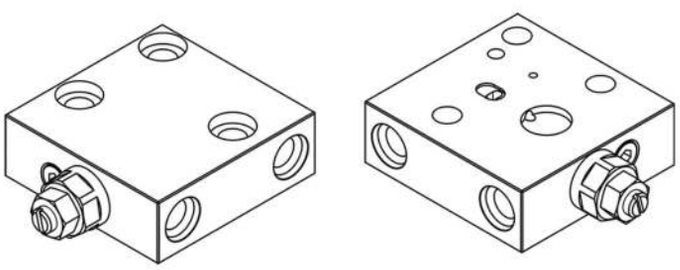

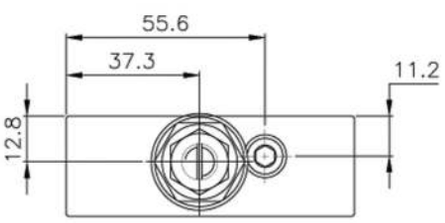

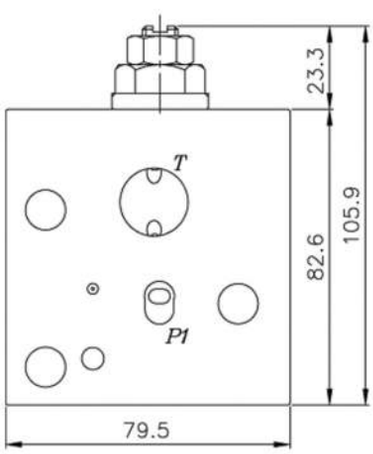

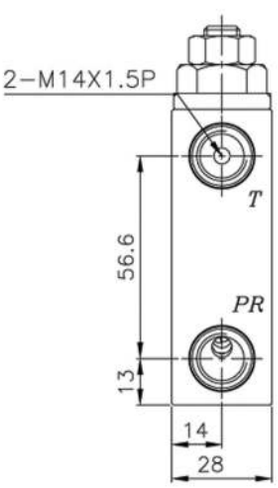

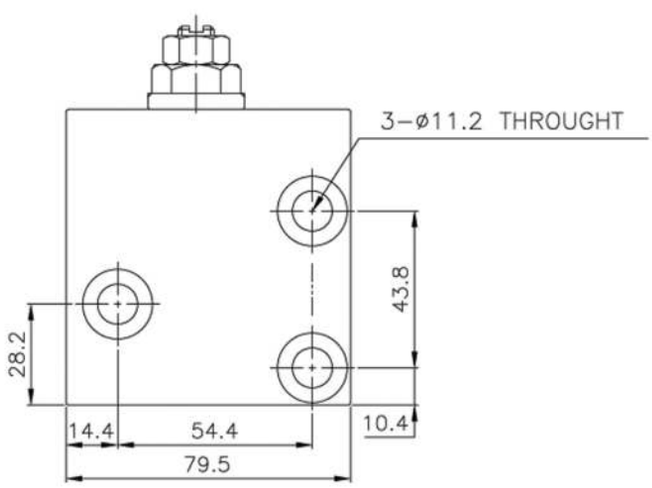

REDUCING VALVE-A10VO28 FOR HITACHI

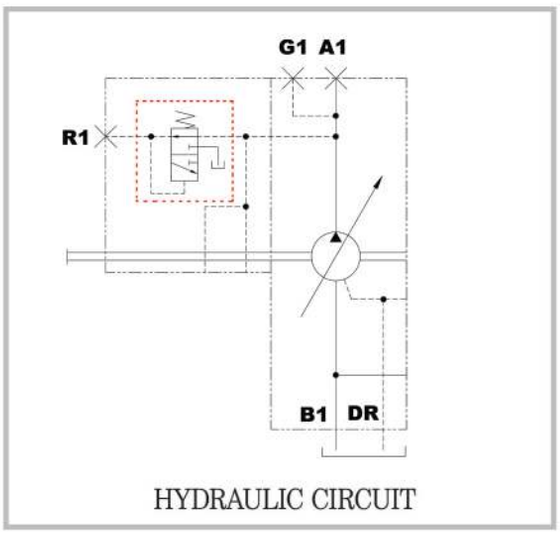

HYDRAULIC CIRCUIT


※USABLE CIRCUMSTANCE
50℃, ISO VG46, -20~90℃

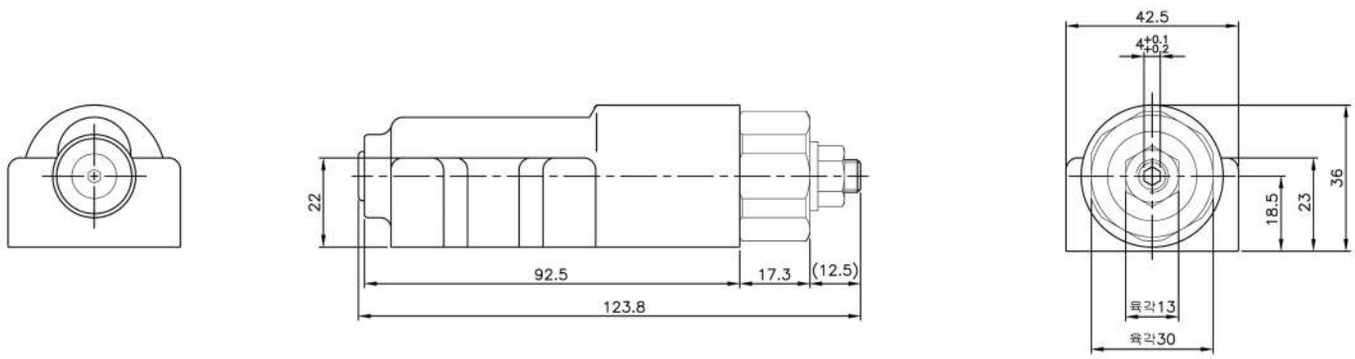

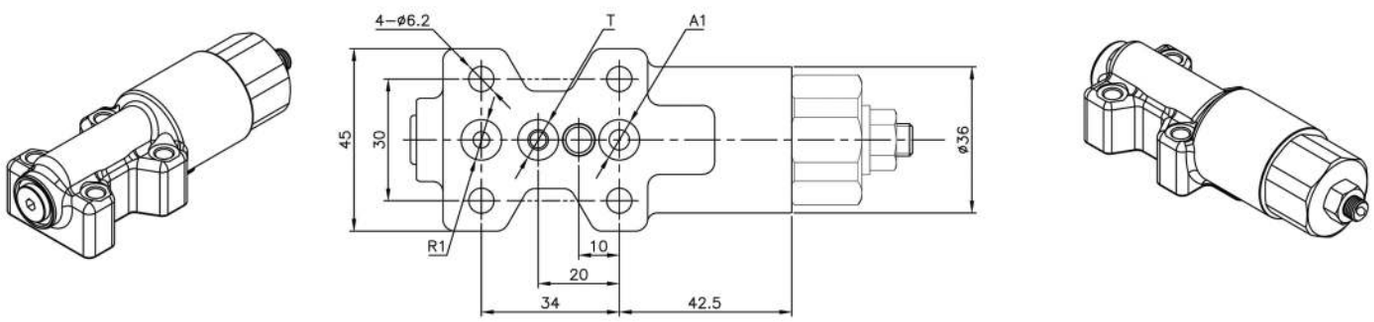

LINEAR(LVDT) SENSOR FOR HITACHI



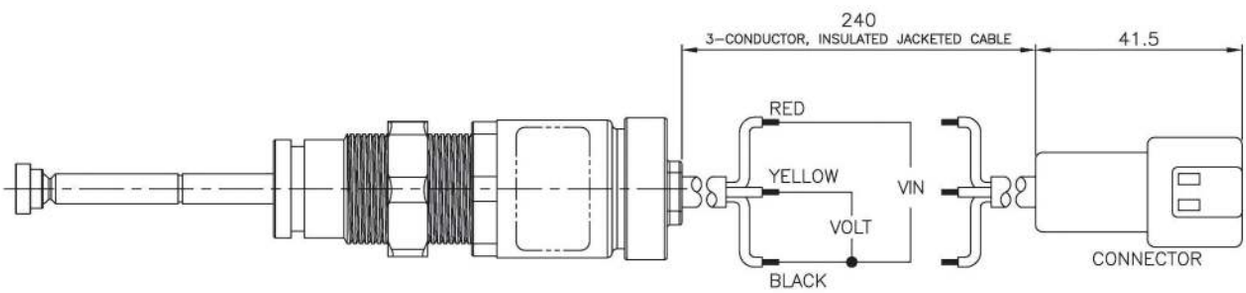

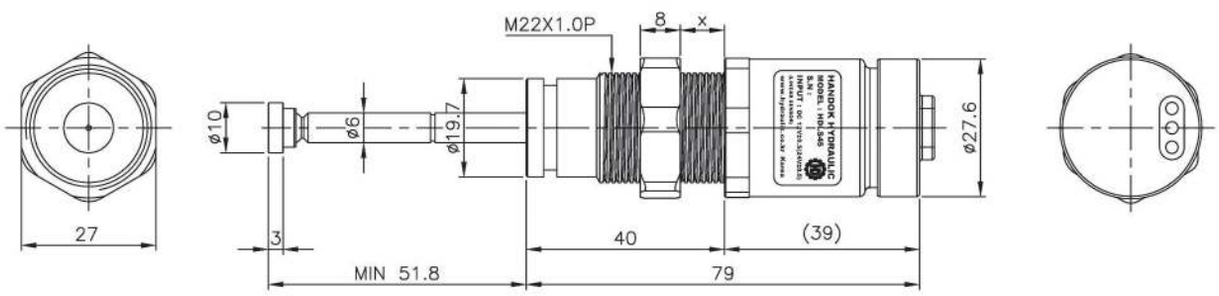

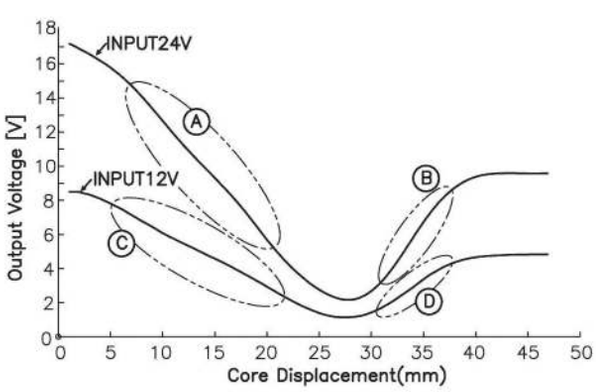

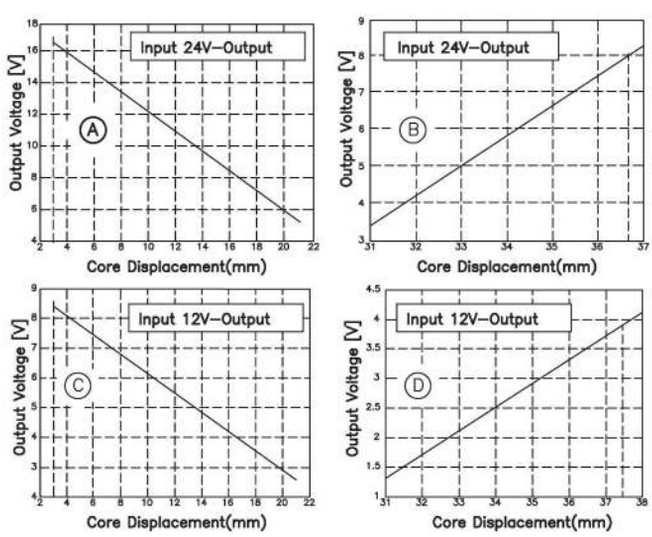

ANGLE(RVDT) SENSOR FOR HITACHI

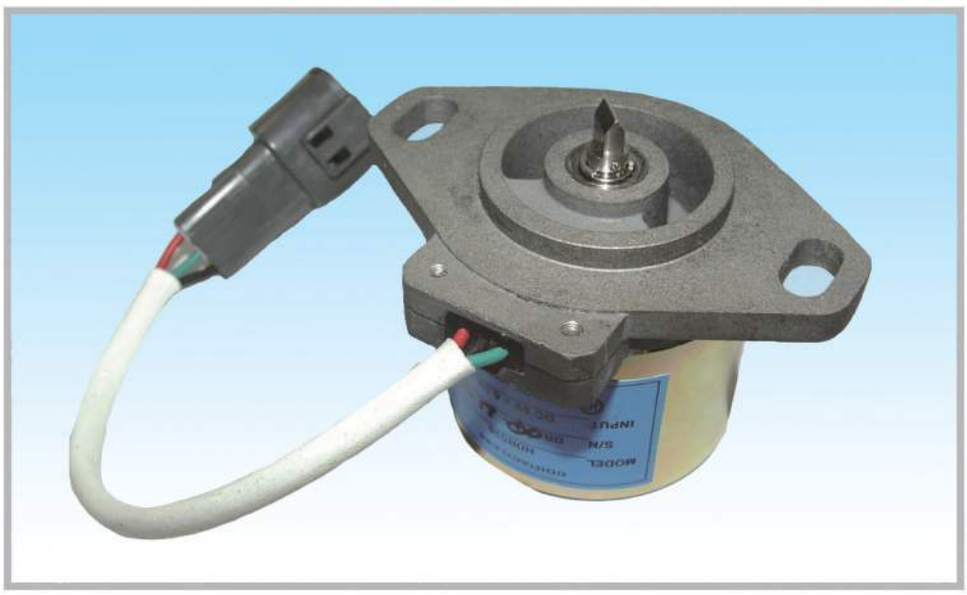

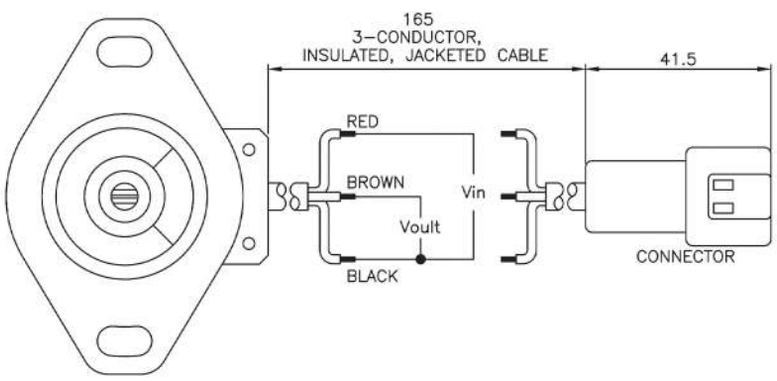

ENVIRONMENTAL SPECIFICATIONS
- OPERATING TEMPERATURE : -40°C ~ +100°C
- VIBRATION: 10 Gs, 2,000 Hz
- SHOCK : 100 Gs, 11 mS

ELECTRICAL SPECIFICATIONS
- ELECTRICAL ANGLE : ±20° (27°C)
- INPUT VOLTAGE (Vin) : DC5V ±0.5
- SUPPLY CURRENT : 20 mA MAX.
- ACCURACY : ±1.7% (27°C)

MECHANICAL ANGLE : 360° (ENDLESS)

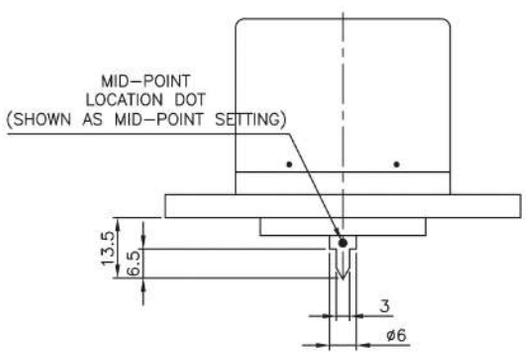

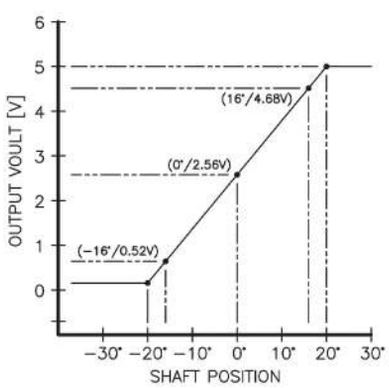

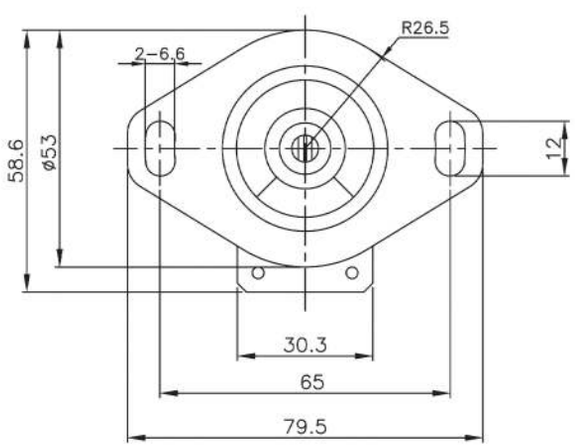

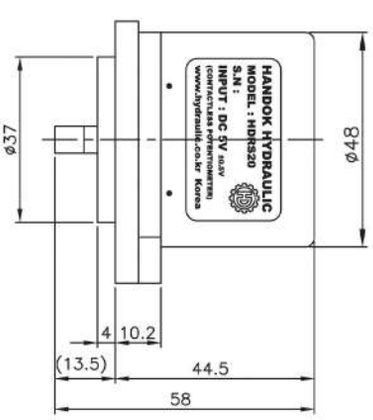

RPM SENSOR FOR HITACHI

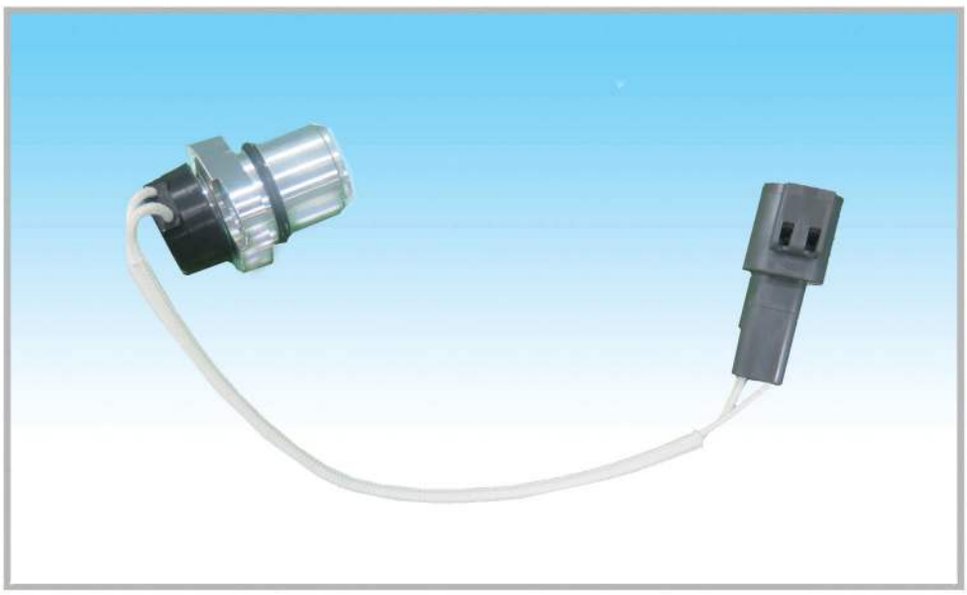

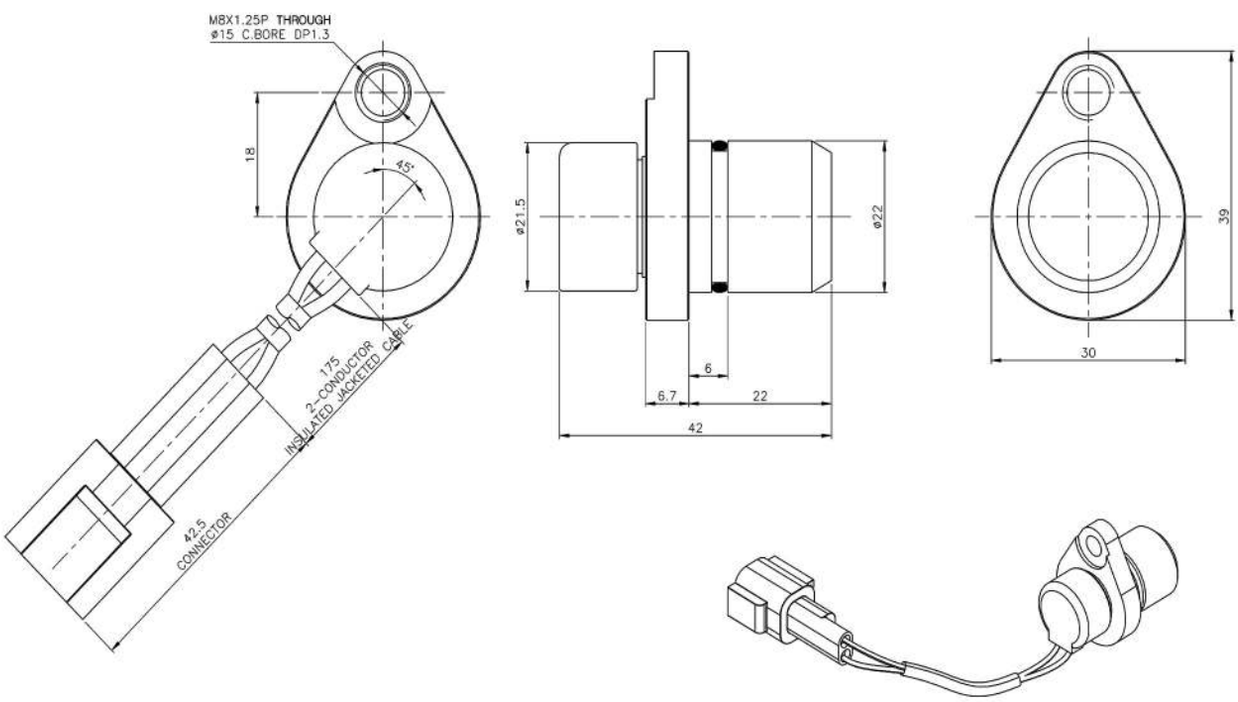

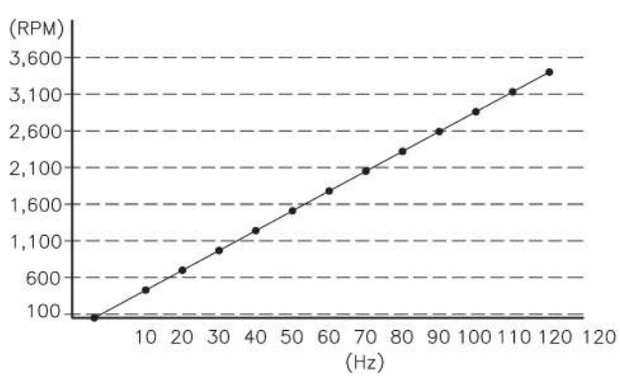

ENVIRONMENTAL SPECIFICATIONS

- **OPERATING TEMPERATURE : -20°C ~ +80°C**
- **MAXIMUM RPM : 5,400 RPM**
- **CAPACITY : 0.7~0.8Ω**

PRESSURE SENSOR FOR FOR HITACHI



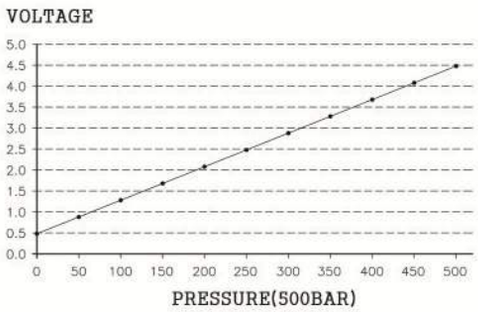

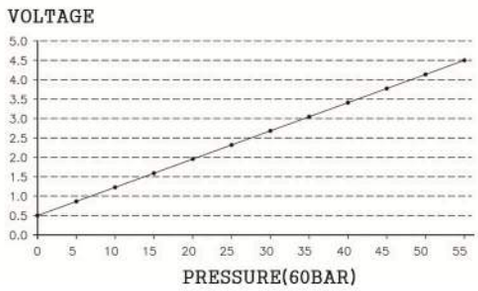

* MAXIMUM PRESSURE : 60Bar

ENVIRONMENTAL SPECIFICATIONS
OPERATING TEMPERATURE : -20° C ~ +80° C
INPUT VOLTAGE : DC 5V

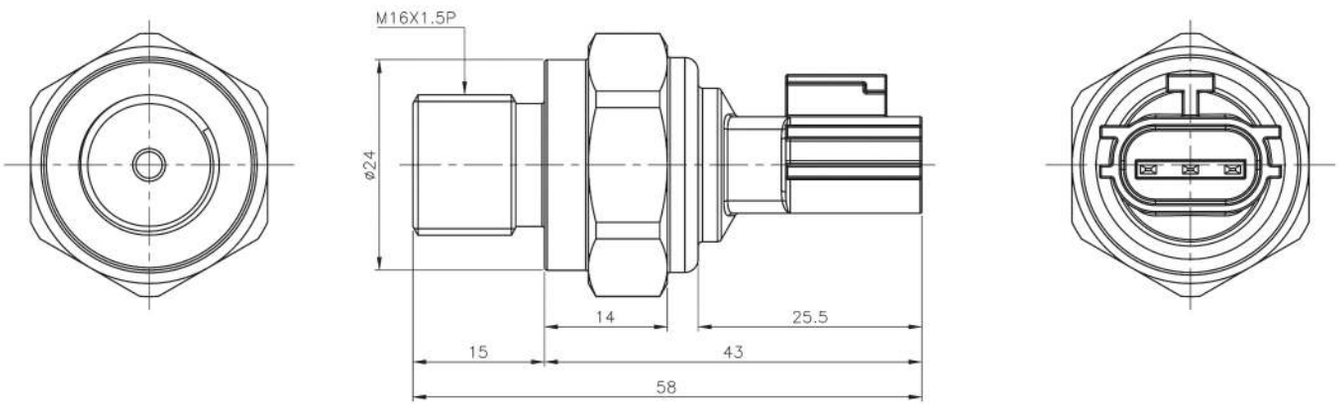

* MAXIMUM PRESSURE : 500Bar

ENVIRONMENTAL SPECIFICATIONS
OPERATING TEMPERATURE : -20° C ~ +80° C
INPUT VOLTAGE : DC 5V

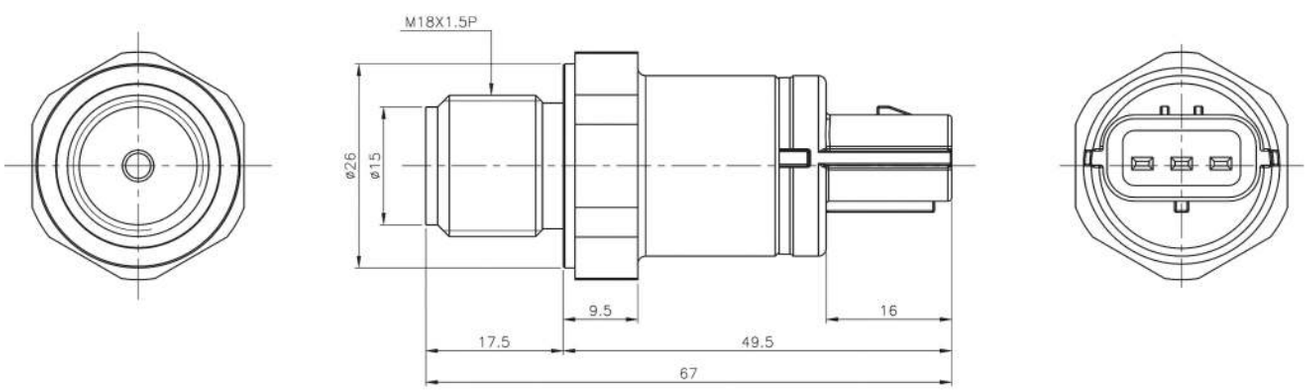

CONTROL VALVE (A10VO SERIES-DFR TYPE)

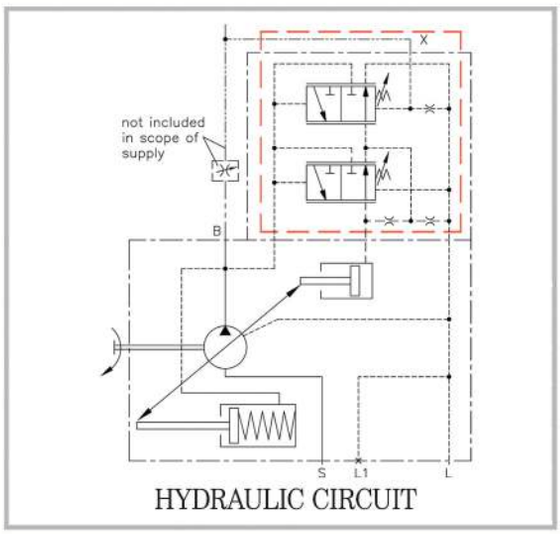

HYDRAULIC CIRCUIT



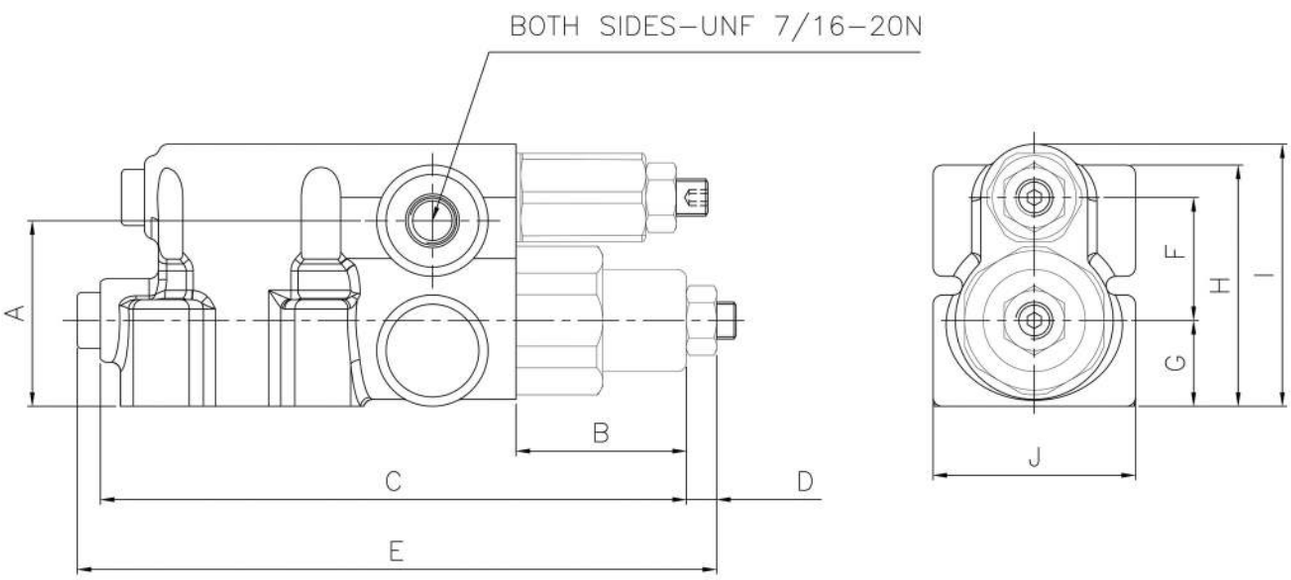

DIMENSIONS

(mm)

MODEL	A	B	C	D	E	F	G	H	I	J
A10VO SERIES	40	36.7	126.2	6.5	137.7	26.5	18.5	52	56.5	43.6

PILOT VALVE (A10VO SERIES)

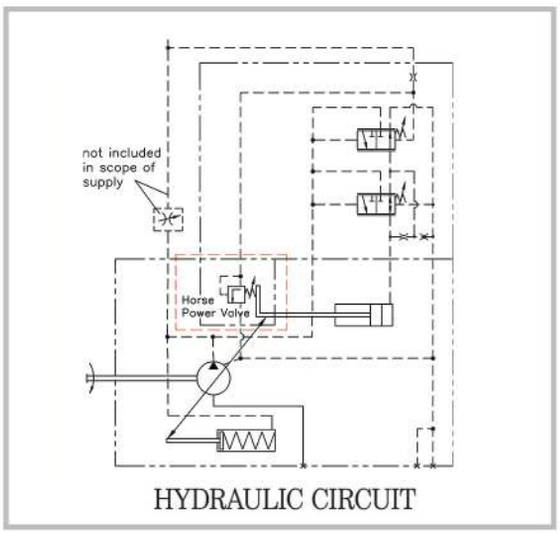

HYDRAULIC CIRCUIT



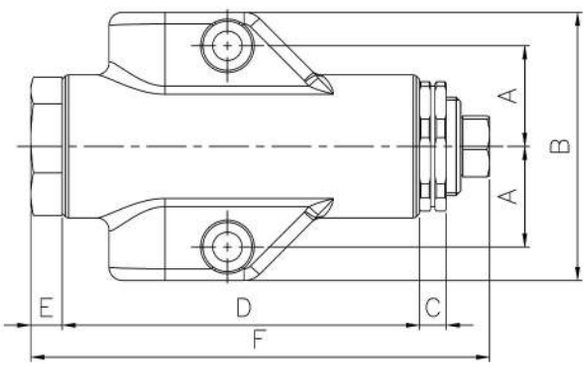

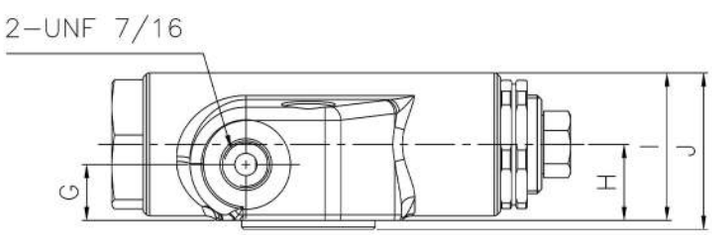

DIMENSIONS

(mm)

MODEL	A	B	C	D	E	F	G	H	I	J
A10VO SERIES	22.5	60	6	80	7	102.7	12.5	17	33	35

LOAD SENSING CONTROL VALVE FOR PC60-7

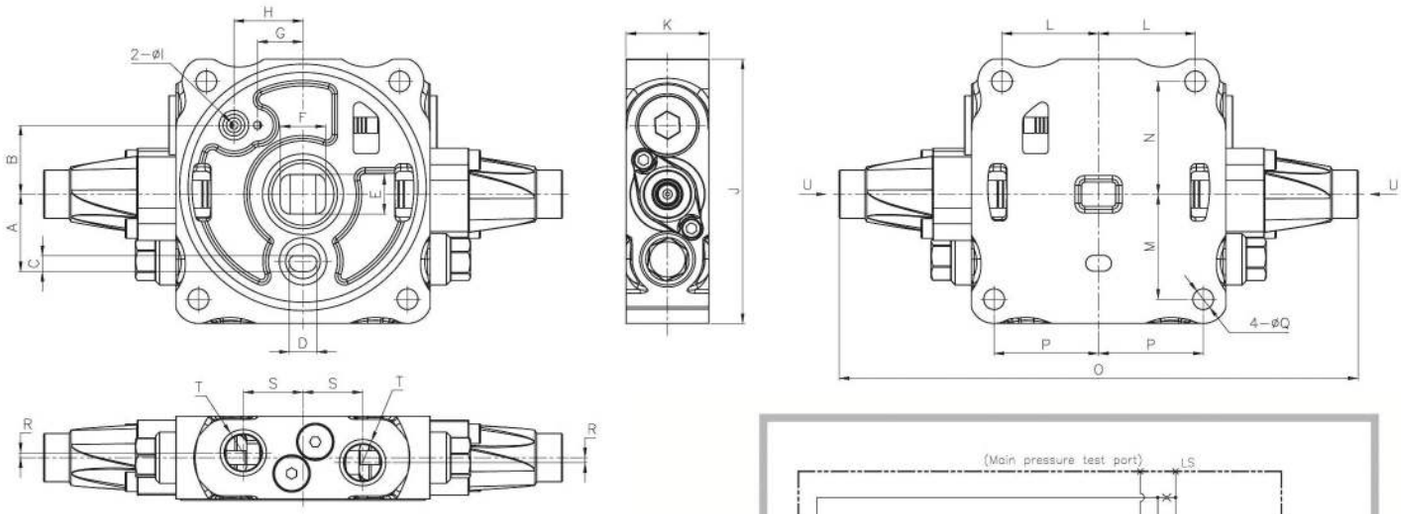



※USABLE CIRCUMSTANCE
50℃, ISO VG46, -20~90℃

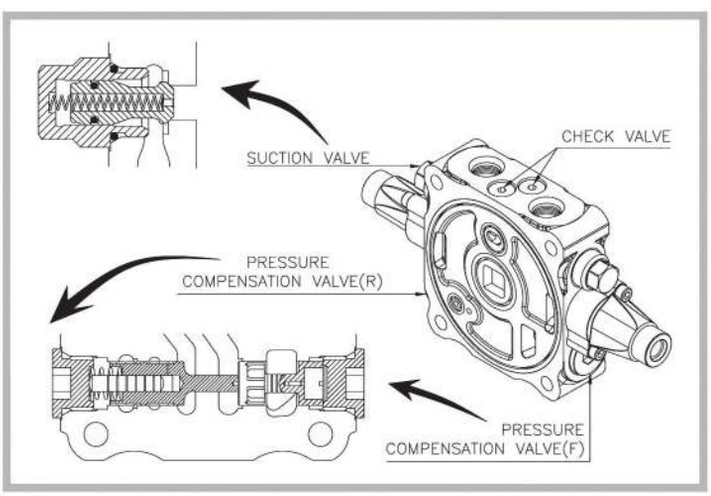

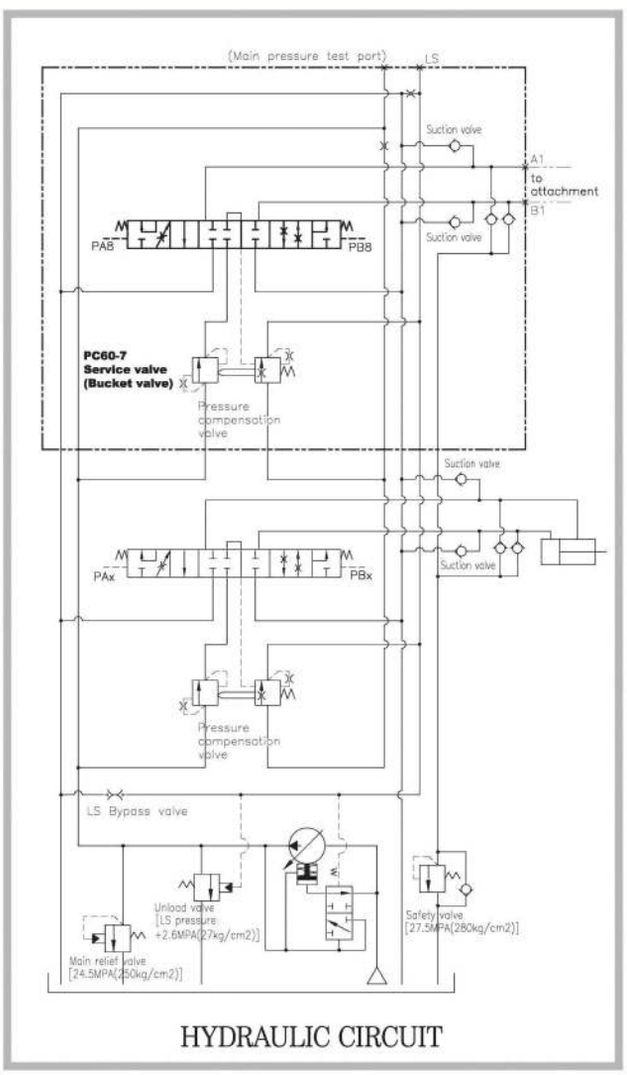

HYDRAULIC CIRCUIT

DIMENSIONS

(mm)

MODEL	A	B	C	D	E	F	G	H	I	J	K	L
PC60-7	39	35	8	14	20	23	23	35	4	134	42	49

MODEL	M	N	O	P	Q	R	S	T	U
PC60-7	53.2	57.2	263	53	10.5	2.5	30.5	M20X1.5P	M14X1.5P

LOAD SENSING CONTROL VALVE FOR PC100&120-6

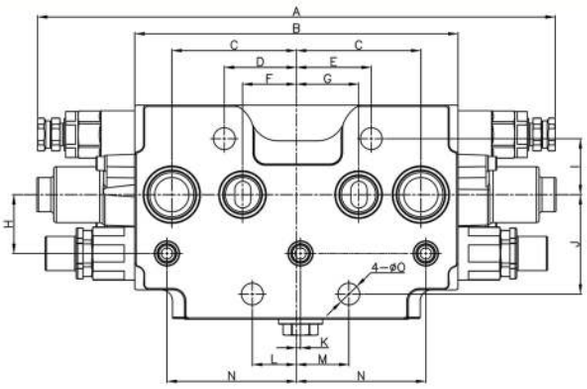

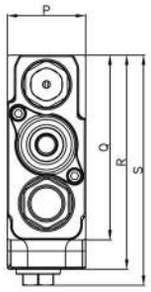

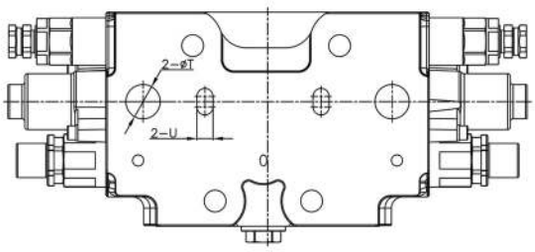

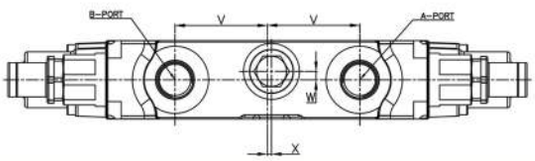

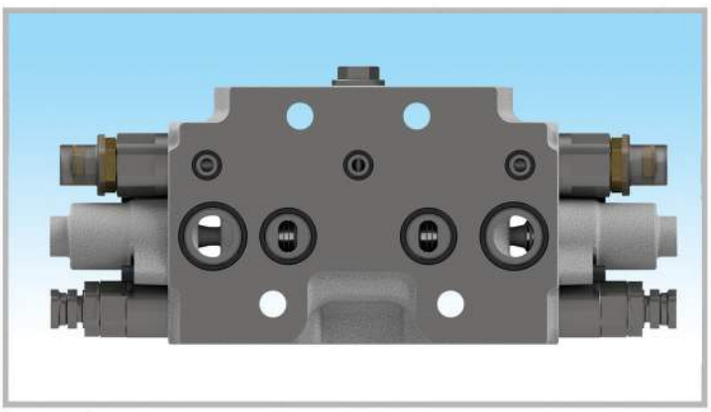

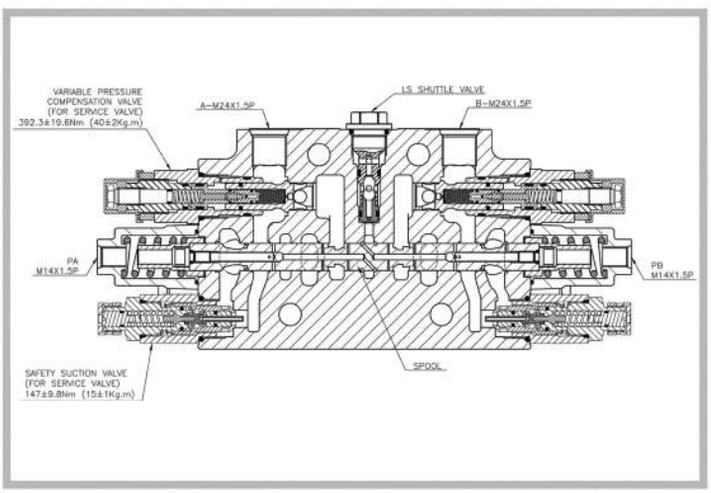

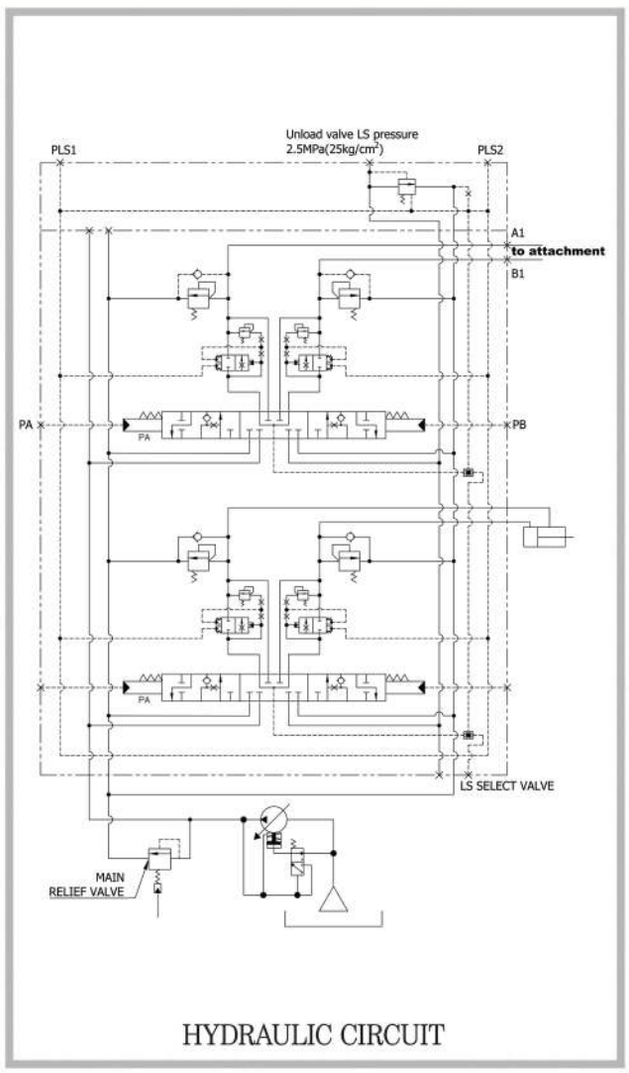

HYDRAULIC CIRCUIT

DIMENSIONS

(mm)

MODEL	A	B	C	D	E	F	G	H	I	J	K	L
PC100&120-6	370	231	89	51.5	53.5	38.5	44.5	42	40	71	3	31.5

MODEL	M	N	O	P	Q	R	S	T	U	V	W	X
PC100&120-6	37.5	92.5	15.5	56	132	153	165	24.5	11.5	66	6	3

LOAD SENSING CONTROL VALVE FOR PC120/130-7&8

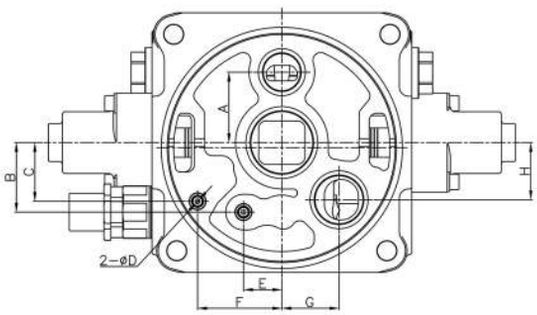

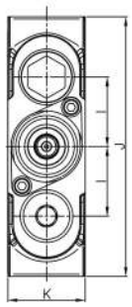

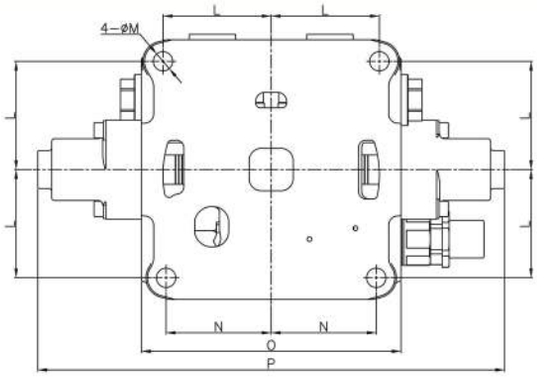

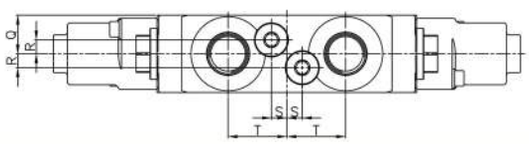



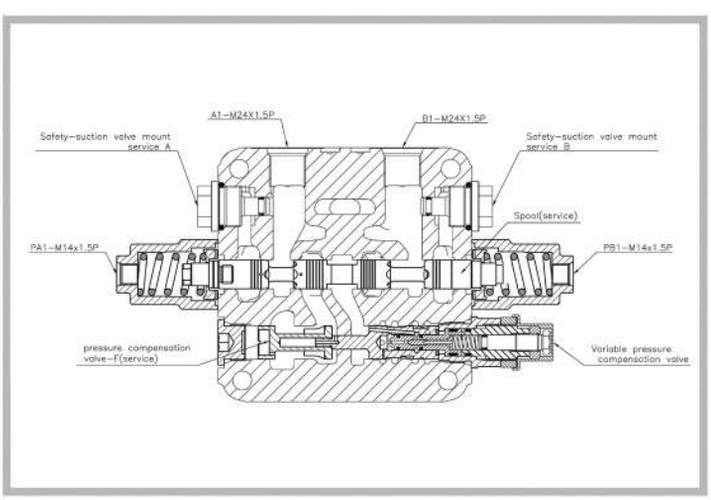

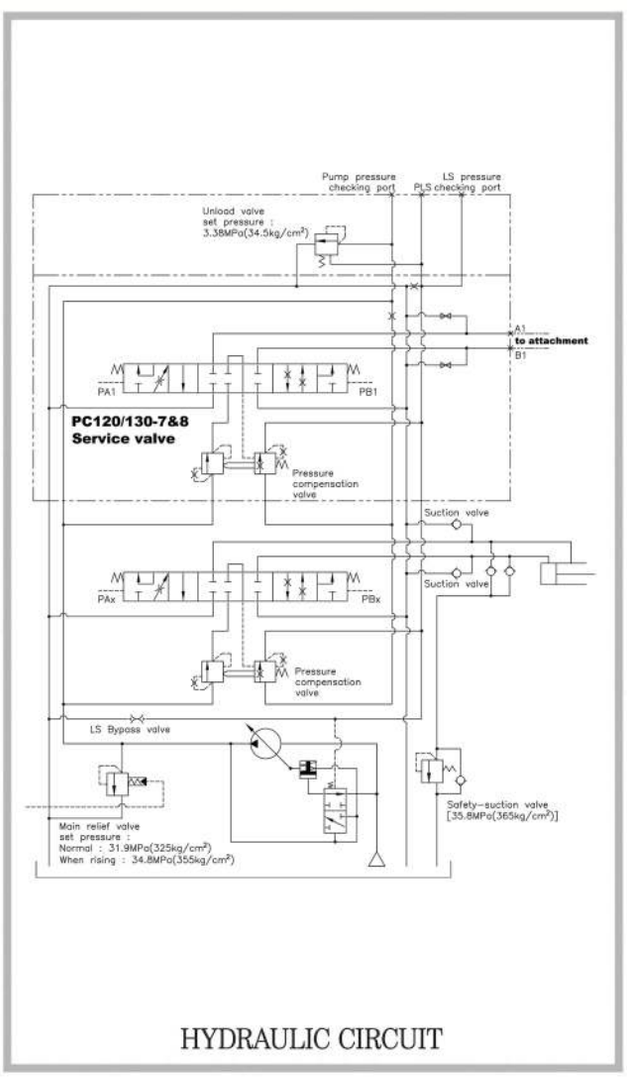

HYDRAULIC CIRCUIT

DIMENSIONS

(mm)

MODEL	A	B	C	D	E	F	G	H	I	J	K	L	M	N	O	P	Q	R	S	T
PC120/130-7&8	45.5	45	38	3	24.8	54.5	37	37	45	168	50	70	12.5	68	168	302	25	9	10	38

LOAD SENSING CONTROL VALVE FOR PC200-6&PC300-6(SERVICE VALVE)

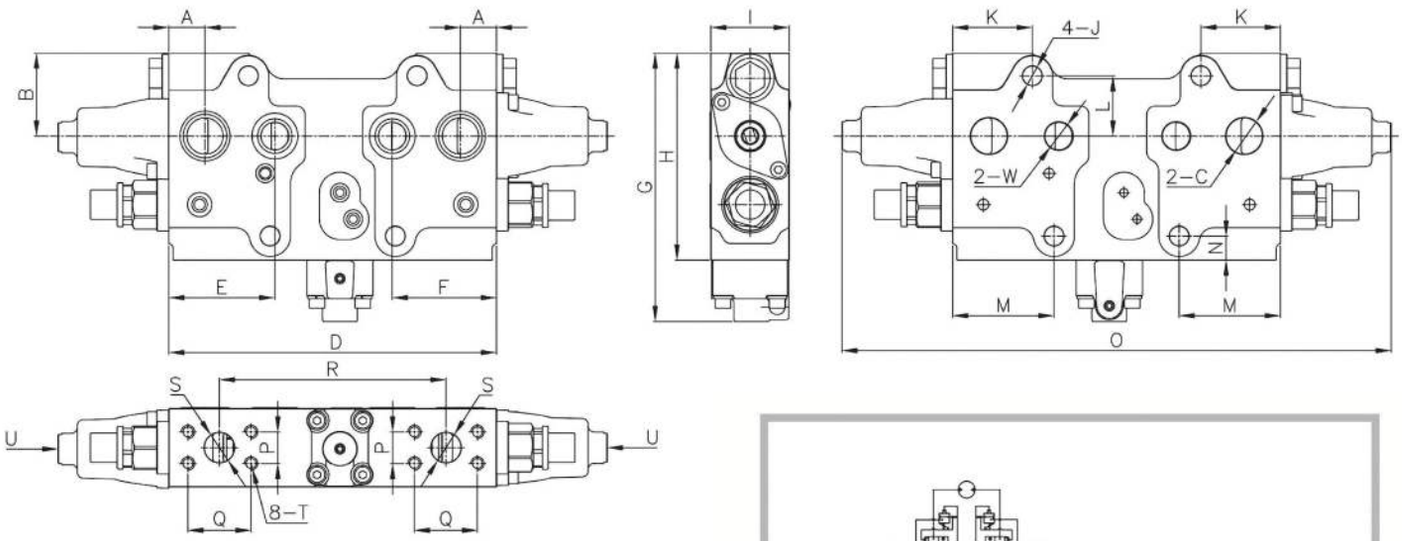

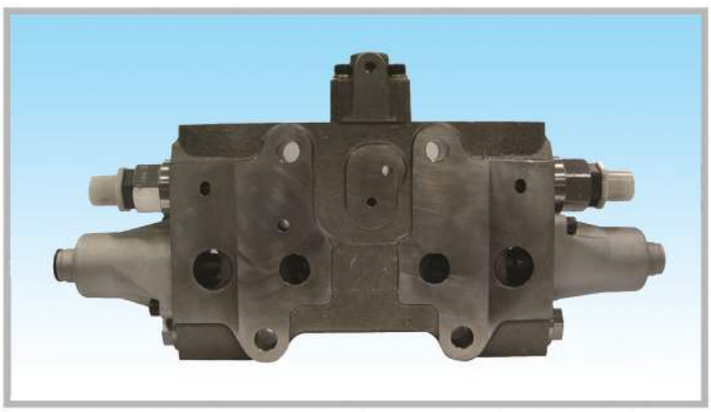

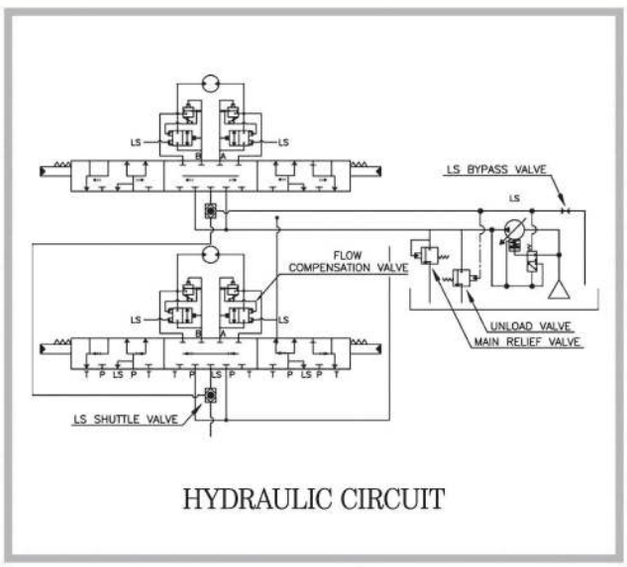

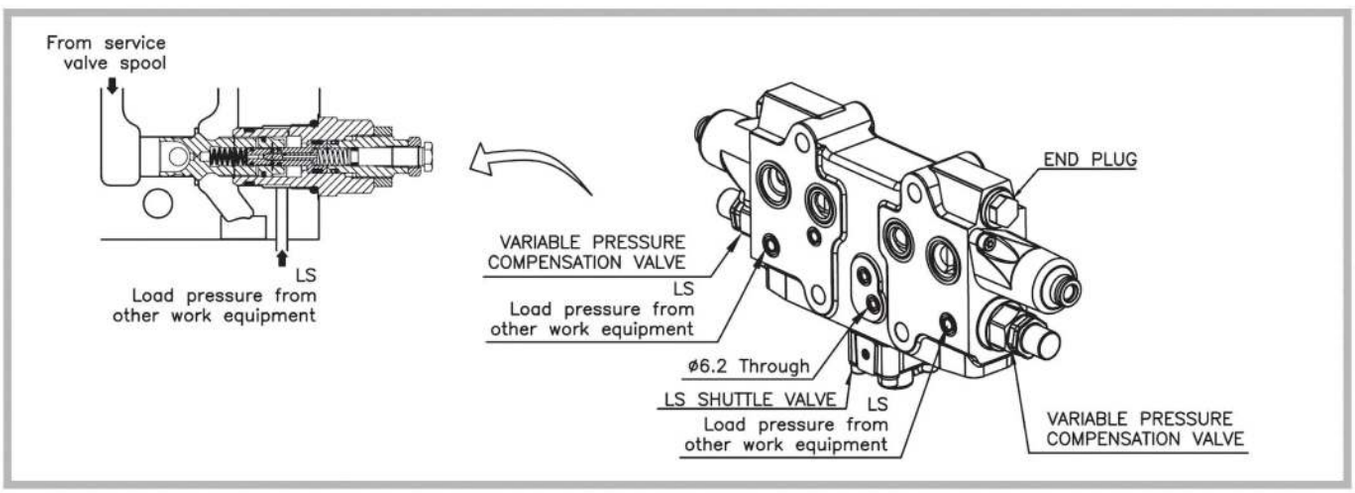

DIMENSIONS

(mm)

MODEL	A	B	C	D	E	F	G	H	I	J	K	L
PC200-6 PC300-6	30	69	ø30	272	88	86.5	223	172	65	ø16	66	50

MODEL	M	N	O	P	Q	R	S	W	T	U
PC200-6 PC300-6	84	20	456	26.2	52.4	188	ø25	ø23	M10X1.5P Dp18	M14X1.5P

LOAD SENSING CONTROL VALVE FOR PC200-7/8&PC300-7/8(SERVICE VALVE)

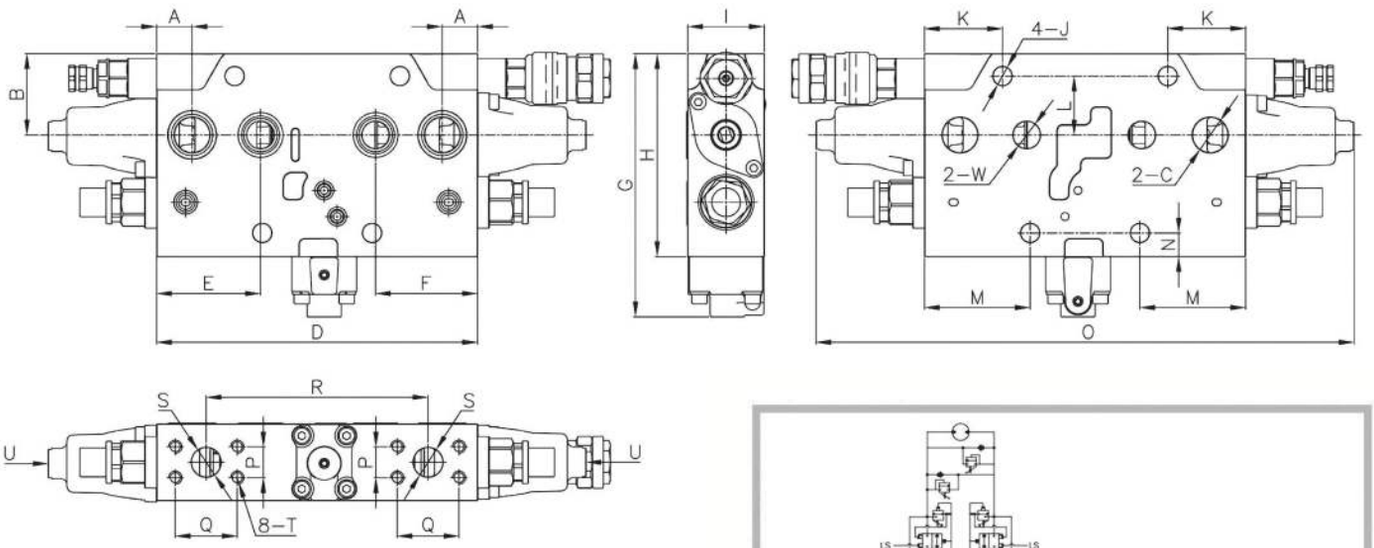



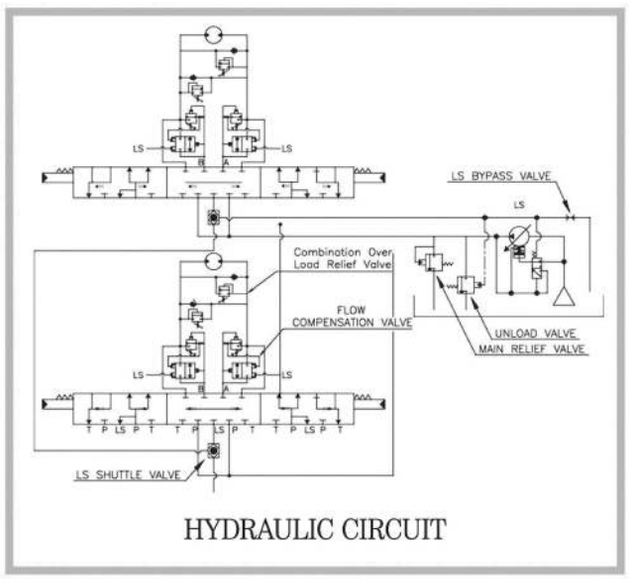

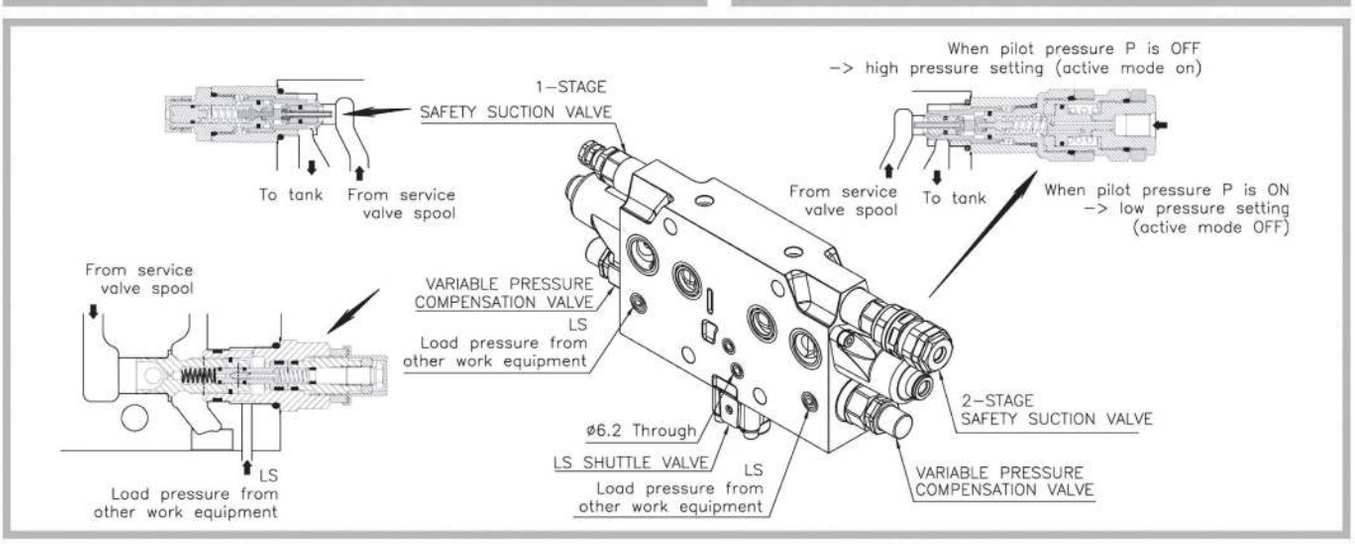

DIMENSIONS

(mm)

MODEL	A	B	C	D	E	F	G	H	I	J	K	L
PC200-7/8 PC300-7/8	30	69	ø30	272	88	86.5	223	172	65	ø16	66	50

MODEL	M	N	O	P	Q	R	S	W	T	U
PC200-7/8 PC300-7/8	89.5	20	456	26.2	52.4	188	ø25	ø23	M10X1.5P Dp18	M14X1.5P

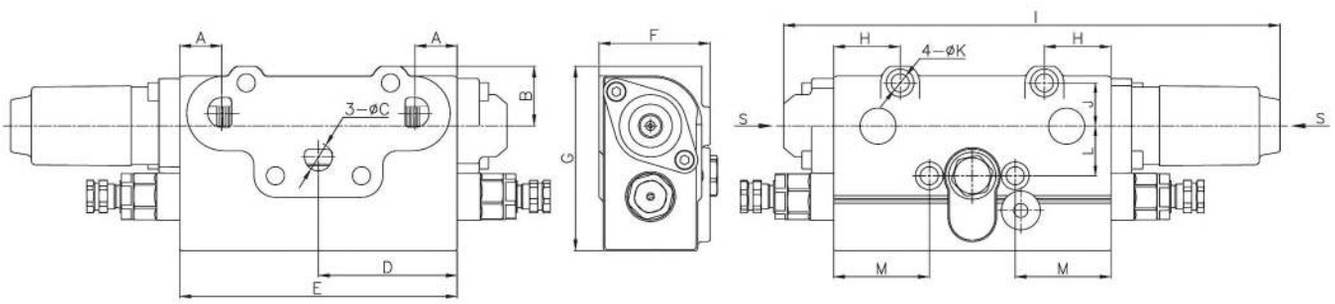

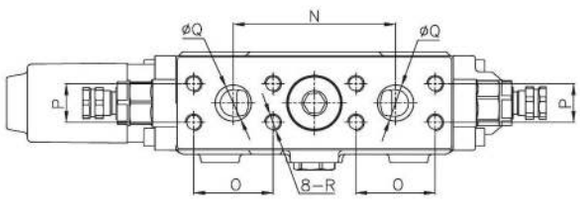

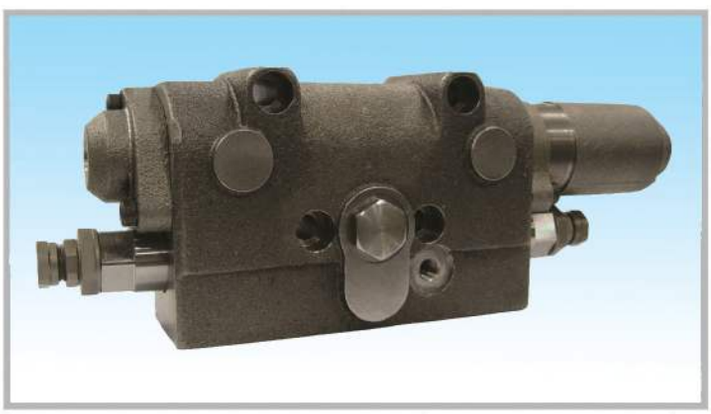

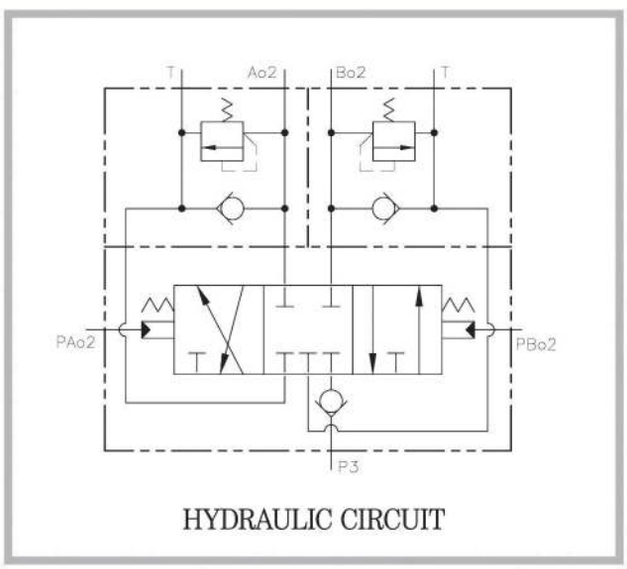

HYDRAULIC CIRCUIT

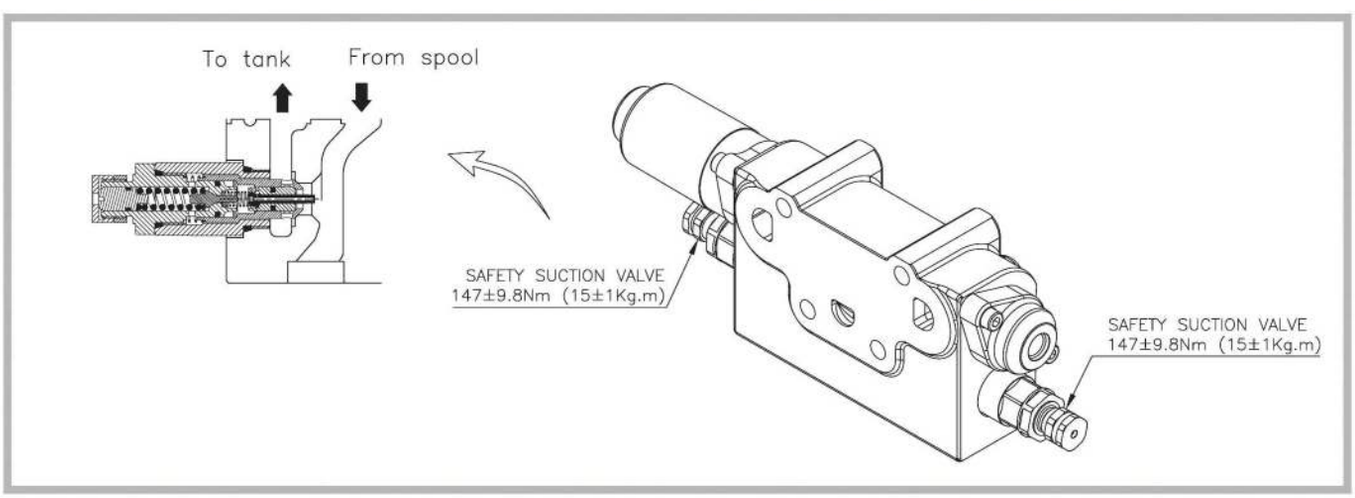

DIMENSIONS

(mm)

MODEL	A	B	C	D	E	F	G	H	I	J
SK200-6	30	43	20	100	200	80	133	48	358	31

MODEL	K	L	M	N	O	P	Q	R	S
SK200-6	13	36	69	117	57.2	27.8	26	M12X1.75P DP20	PF3/8

NEGA-CON RELIEF VALVE FOR KOBELCO / NEW HOLLAND

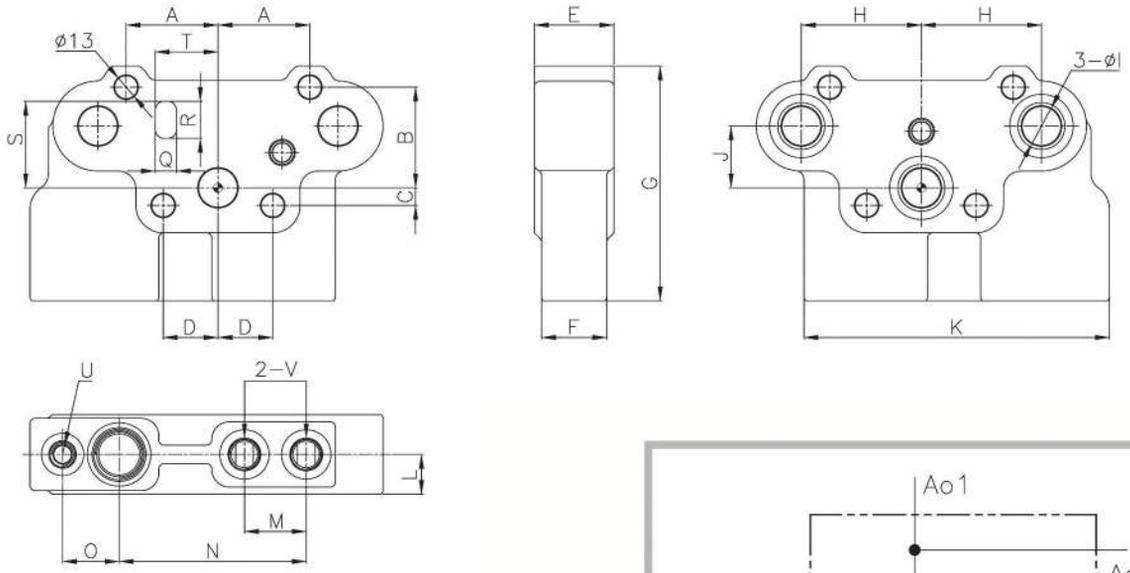



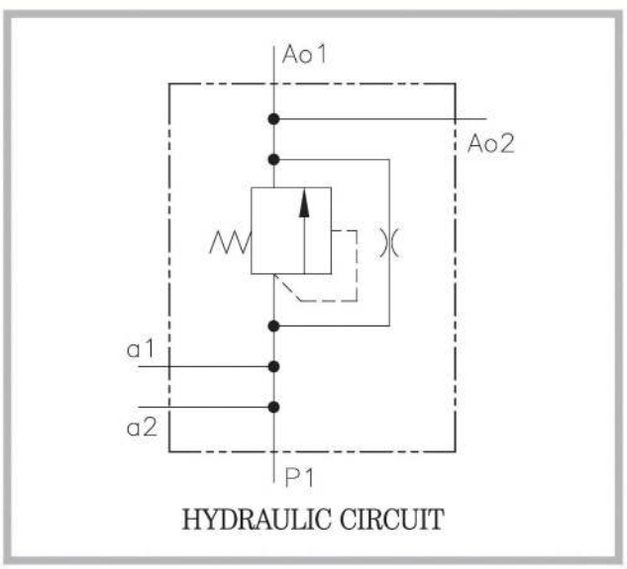

HYDRAULIC CIRCUIT

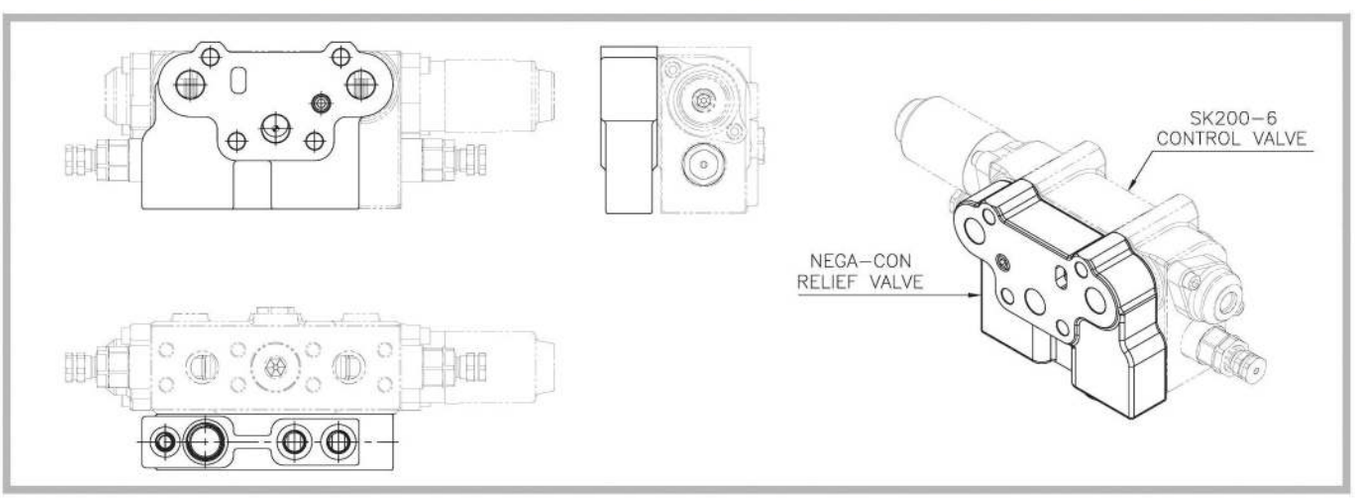

DIMENSIONS

(mm)

MODEL	A	B	C	D	E	F	G	H	I	J	K	L
SK200-7	52	57	10	31	45	37	133	68	22	35	173	22.5

MODEL	M	N	O	P	Q	R	S	T	U	V
SK200-7	35	106	32	13	12	21	49	35.5	PF1/4	PF3/8

REGULATOR FOR 1P00 TYPE



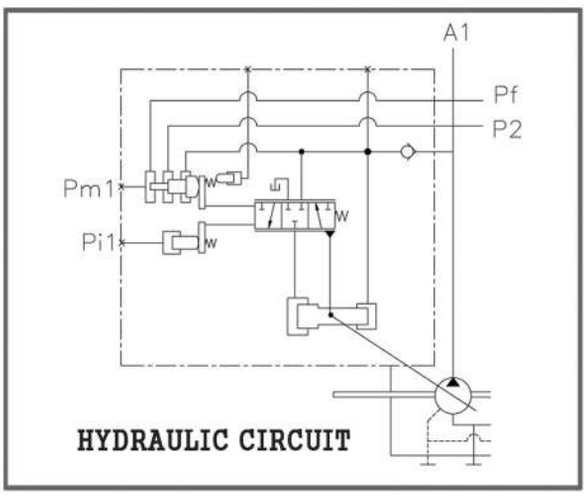

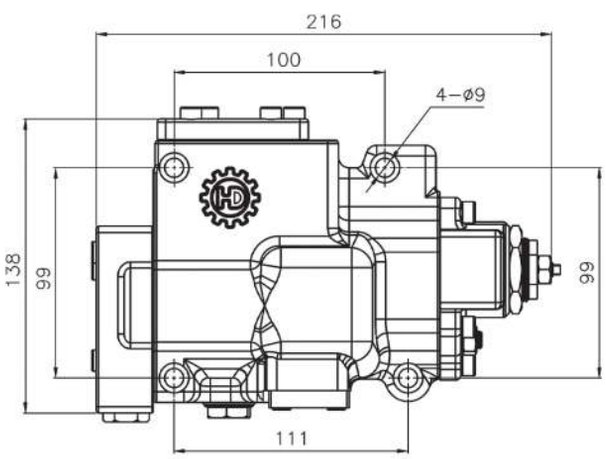

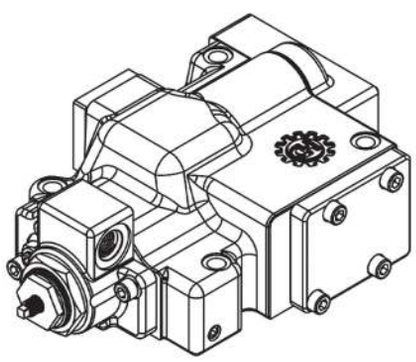

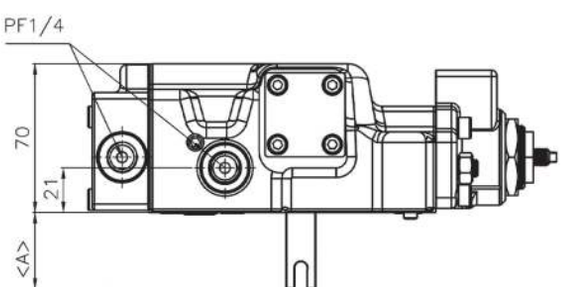

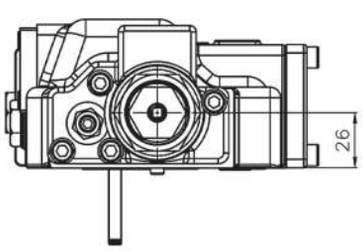

STANDARD DIMENSIONS

(mm)

MODEL	A
H3V63	22
H3V112	36
H3V140&180	57
H5V160 & 200	66

MODEL	A
H5V80	40.5
H5V140	48
H3V280	75.7
H5V160DPH & 200DPH	

REGULATOR FOR 2P00 TYPE



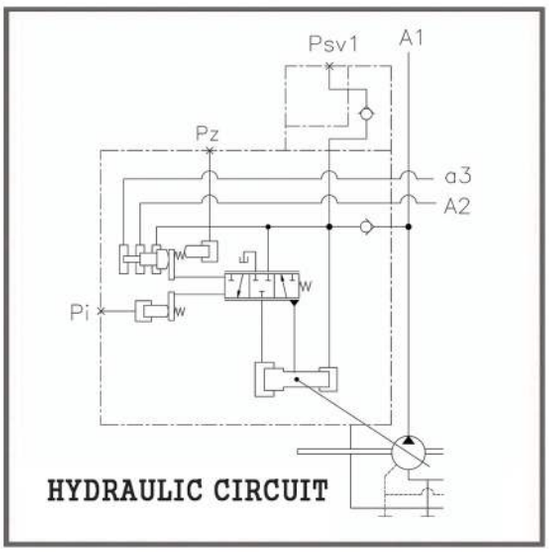

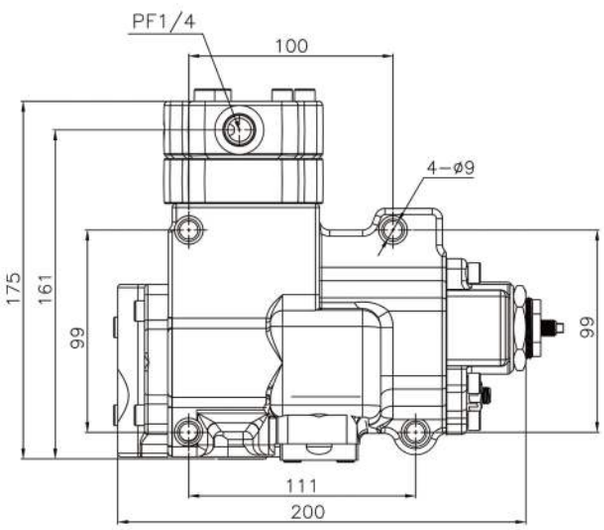

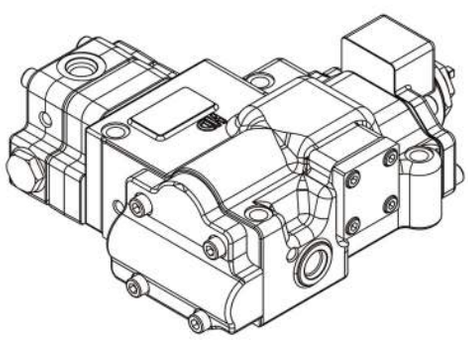

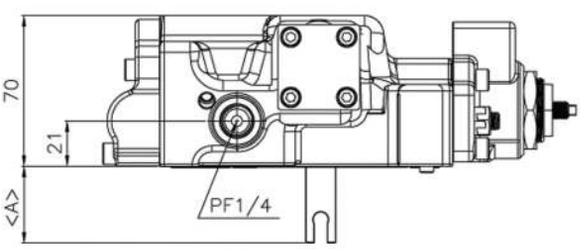

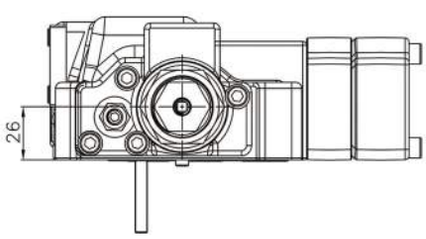

STANDARD DIMENSIONS

(mm)

MODEL	A
H3V63	22
H3V112	36
H3V140&180	57
H5V160 & 200	66

MODEL	A
H5V80	40.5
H5V140	48
H3V280	75.7
H5V160DPH & 200DPH	

REGULATOR FOR 9N00 TYPE



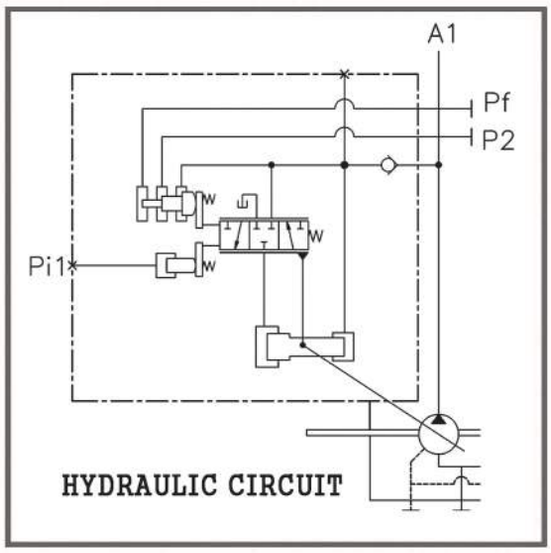

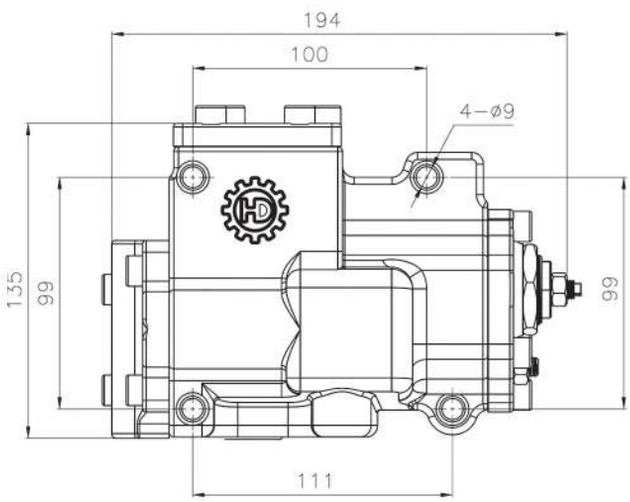

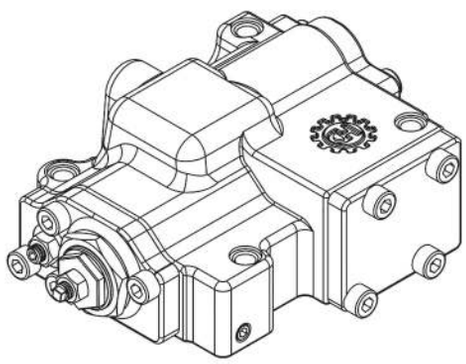

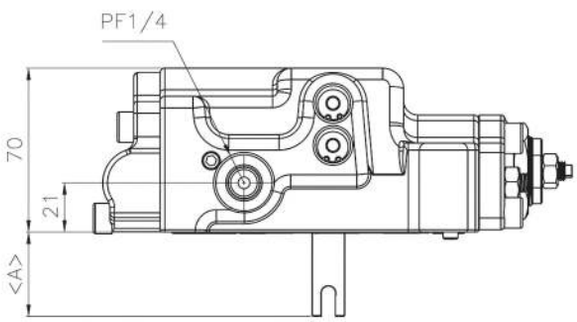

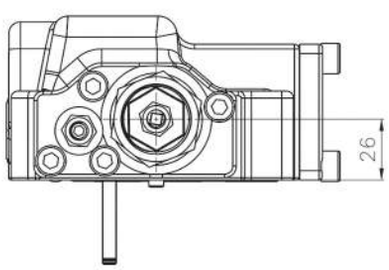

STANDARD DIMENSIONS

(mm)

MODEL	A
H3V63	22
H3V112	36
H3V140&180	57
H5V160 & 200	66

MODEL	A
H5V80	40.5
H5V140	48
H3V280	75.7
H5V160DPH & 200DPH	

REGULATOR
FOR 9N00 TYPE WITH MANIFOLD(BOLT)



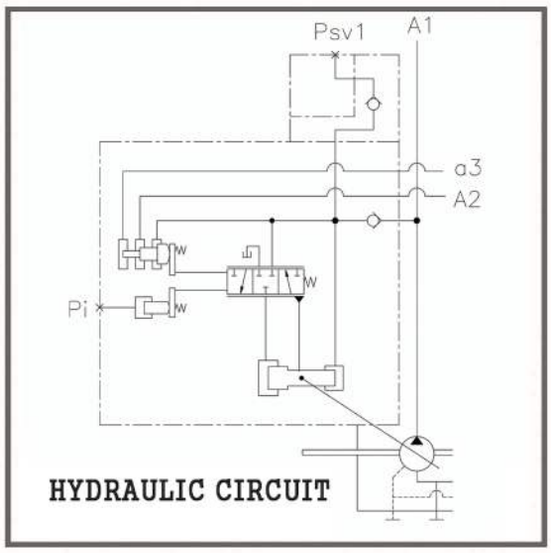

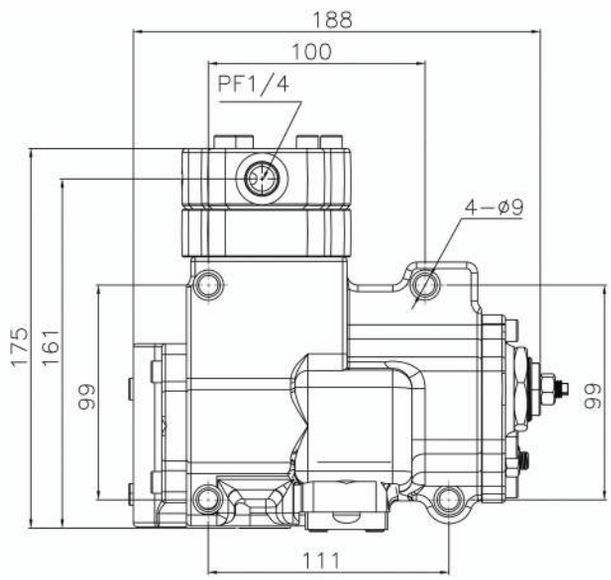

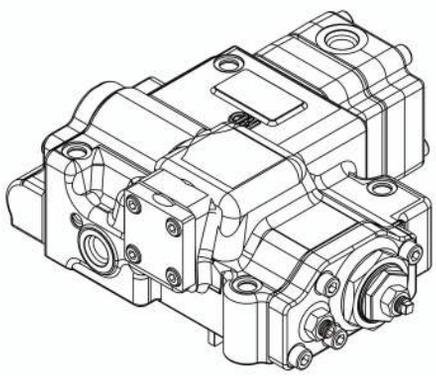

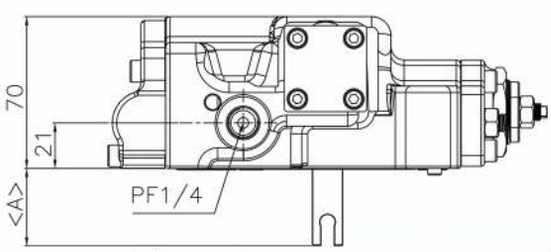

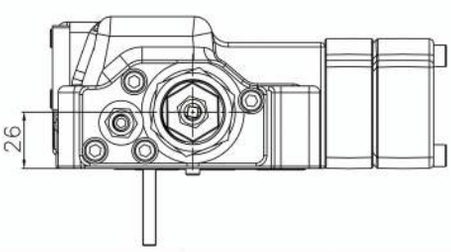

STANDARD DIMENSIONS (mm)

MODEL	A
H3V63	22
H3V112	36
H3V140&180	57
H5V160 & 200	66

MODEL	A
H5V80	40.5
H5V140	48
H3V280	75.7
H5V160DPH & 200DPH	

REGULATOR
FOR 9N00 TYPE WITH MANIFOLD

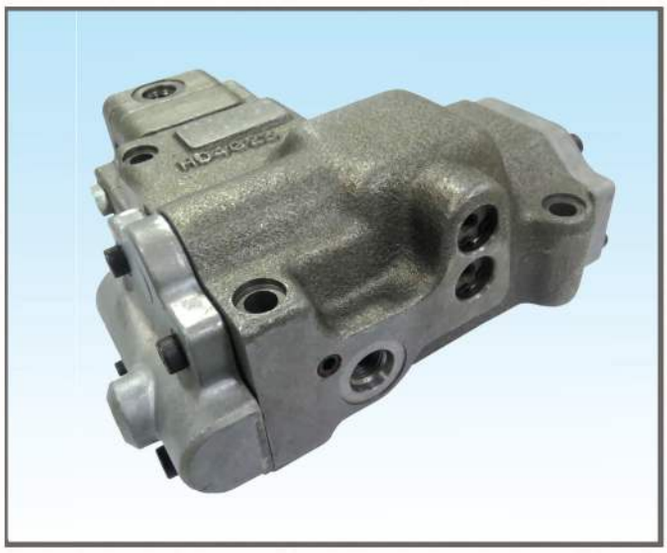

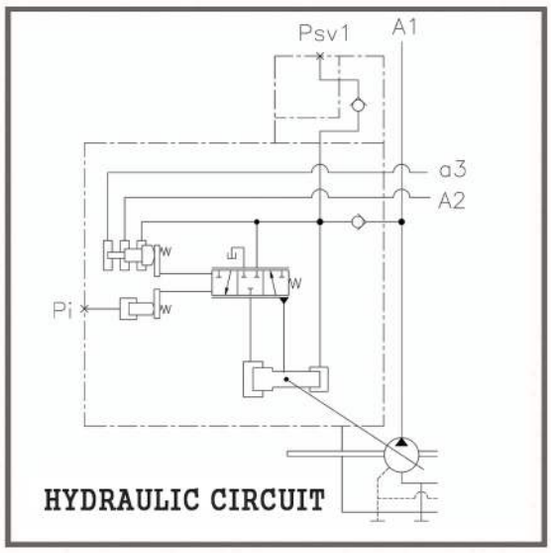

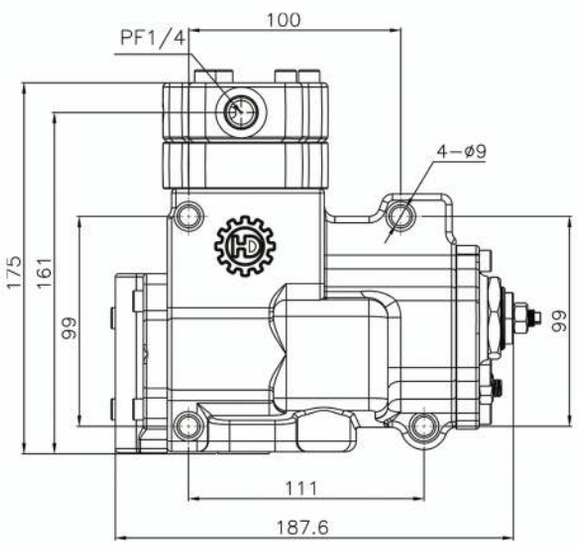

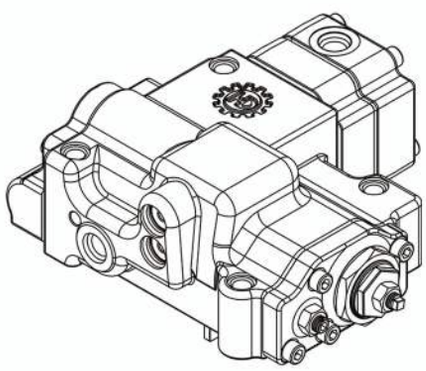

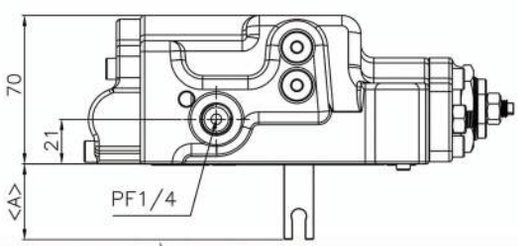

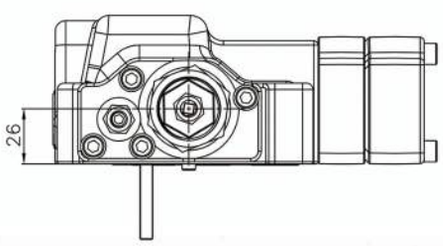

STANDARD DIMENSIONS

(mm)

MODEL	A
H3V63	22
H3V112	36
H3V140&180	57
H5V160 & 200	66

MODEL	A
H5V80	40.5
H5V140	48
H3V280	75.7
H5V160DPH & 200DPH	

REGULATOR FOR 9N00 TYPE WITH EPR

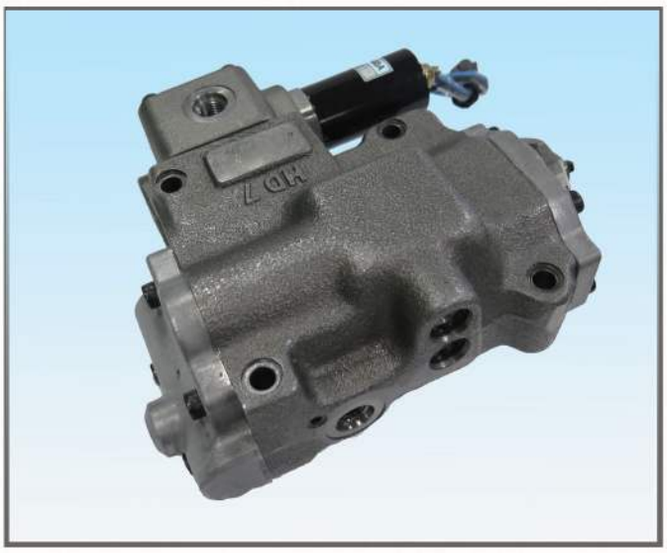

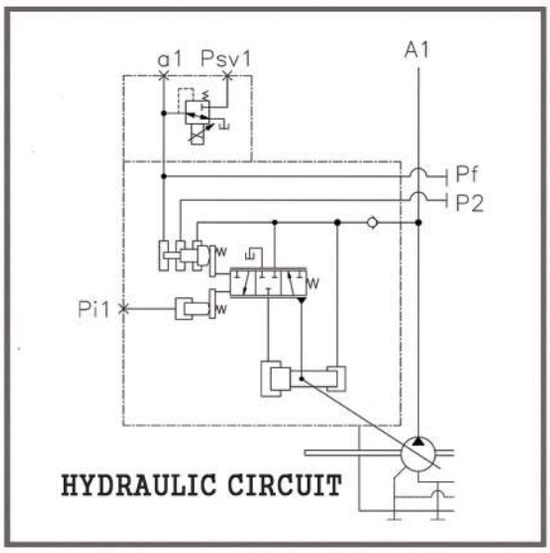

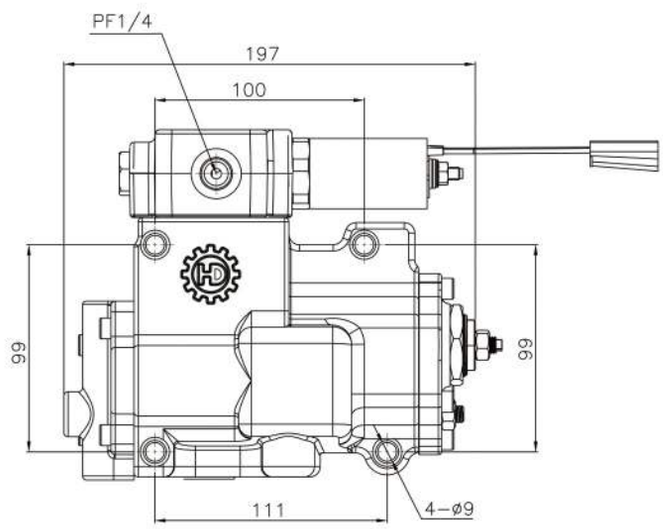

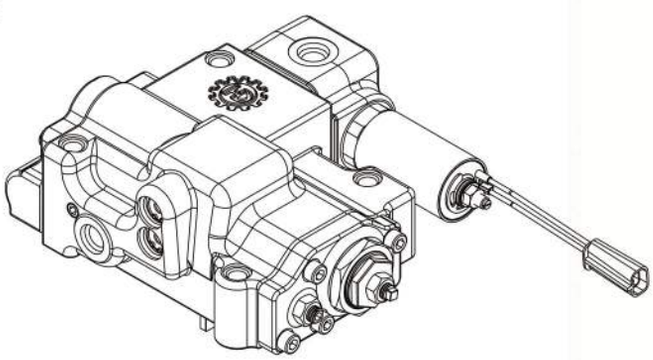

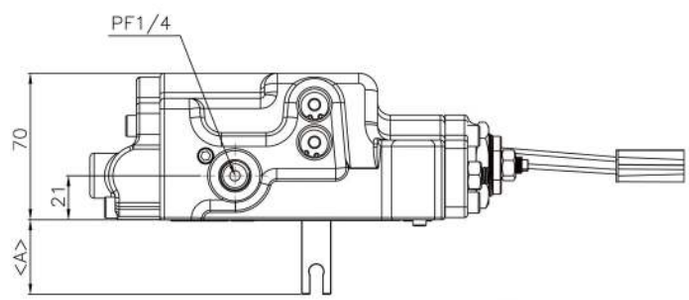

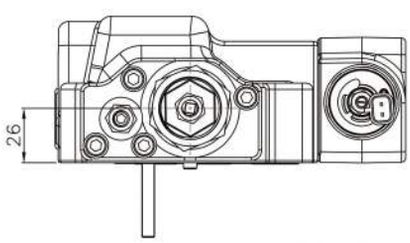

STANDARD DIMENSIONS

(mm)

MODEL	A
H3V63	22
H3V112	36
H3V140&180	57
H5V160 & 200	66

MODEL	A
H5V80	40.5
H5V140	48
H3V280	75.7
H5V160DPH & 200DPH	

REGULATOR FOR 9N00 TYPE WITH EPR(DTH)

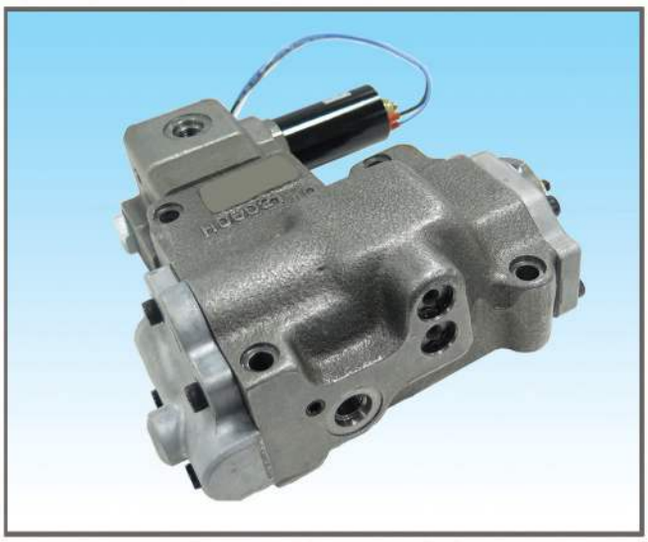

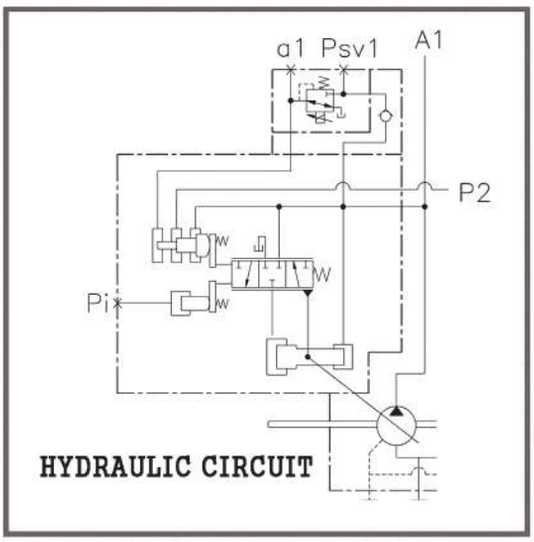

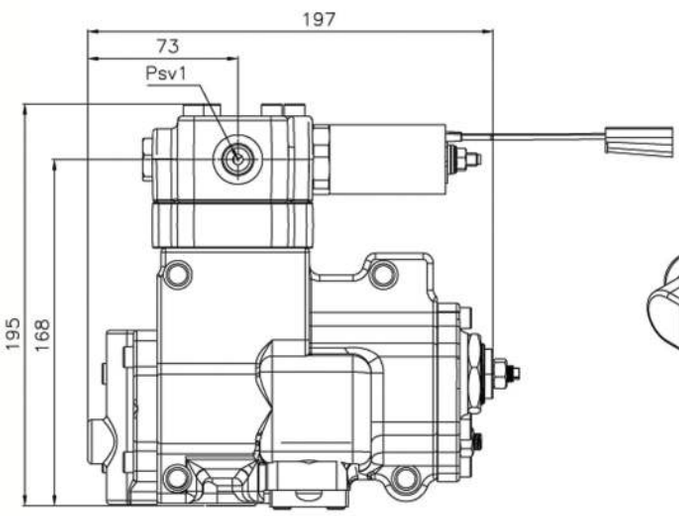

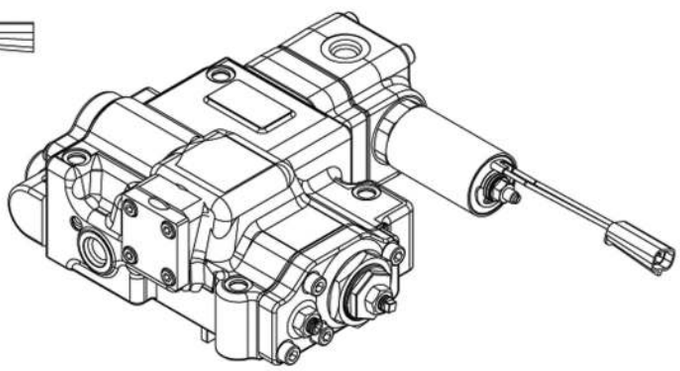

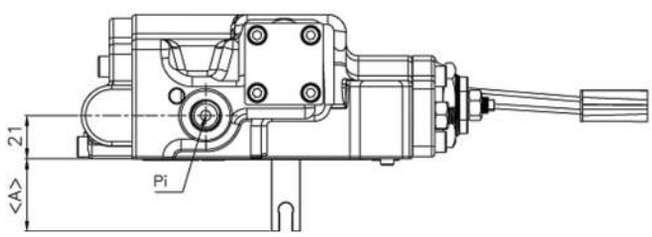

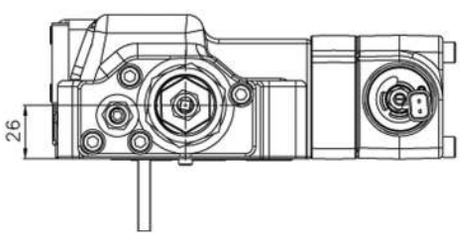

STANDARD DIMENSIONS (mm)

MODEL	A
H3V63	22
H3V112	36
H3V140&180	57
H5V160 & 200	66

MODEL	A
H5V80	40.5
H5V140	48
H3V280	75.7
H5V160DPH & 200DPH	

REGULATOR
FOR 9NOO TYPE WITH EPR(4BOLT-DTH TYPE)

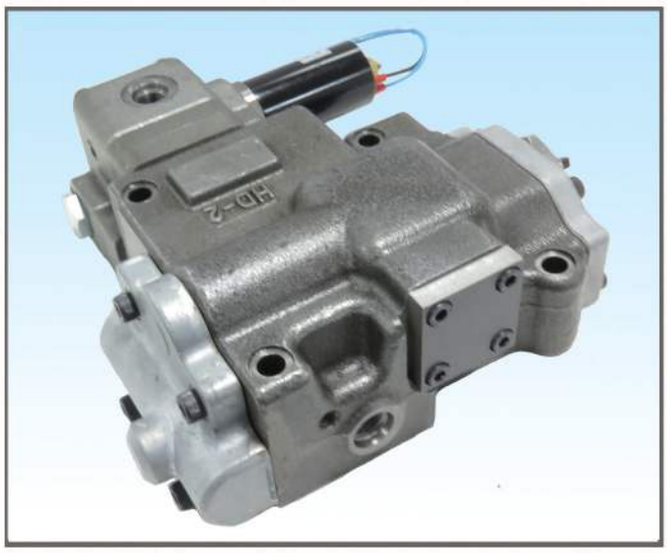

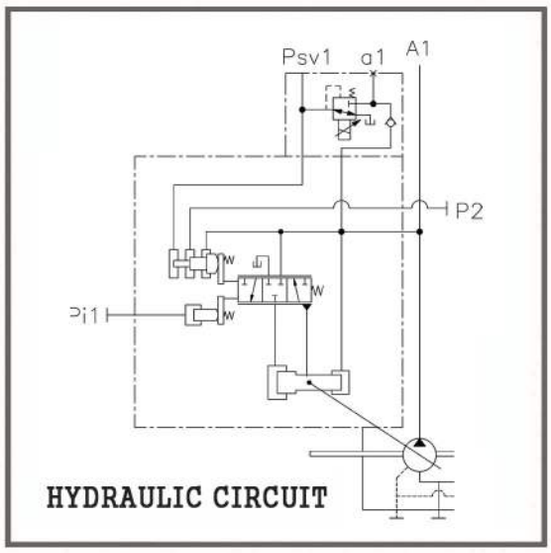

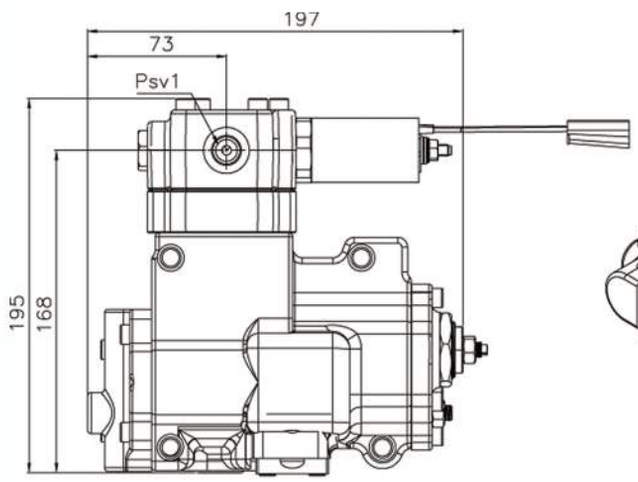

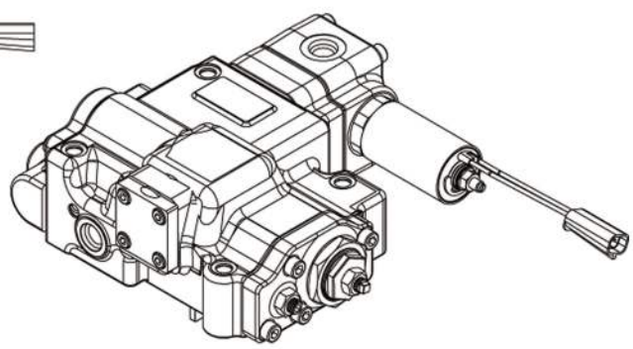

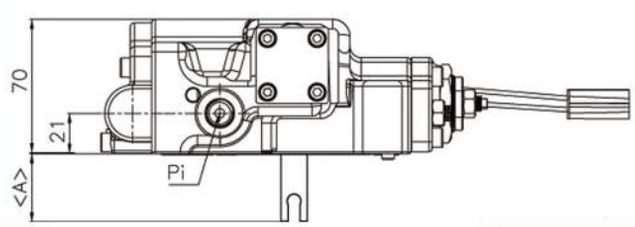

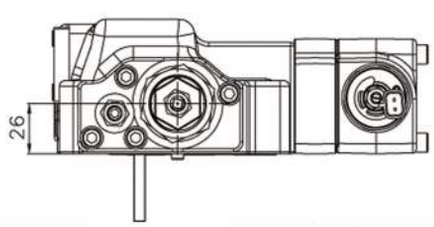

STANDARD DIMENSIONS

(mm)

MODEL	A
H3V63	22
H3V112	36
H3V140&180	57
H5V160 & 200	66

MODEL	A
H5V80	40.5
H5V140	48
H3V280	75.7
H5V160DPH & 200DPH	

REGULATOR FOR 9C00 TYPE



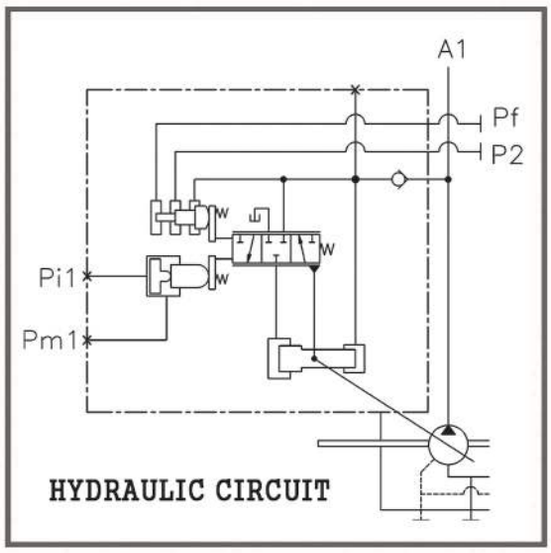

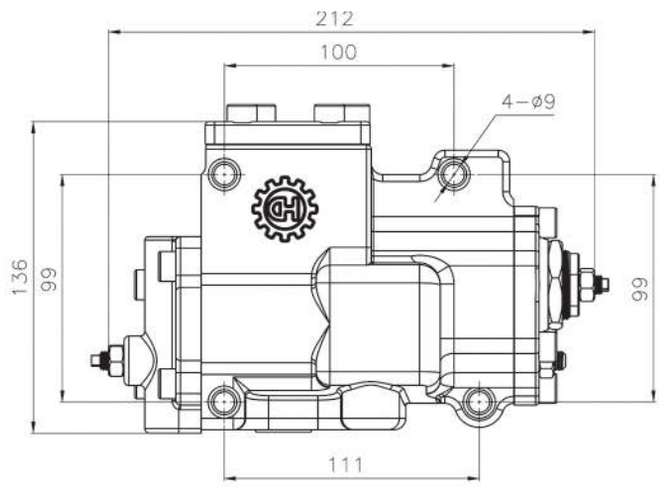

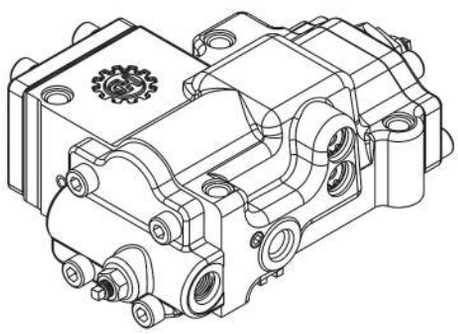

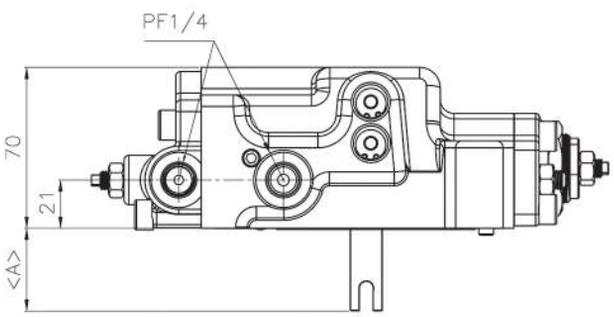

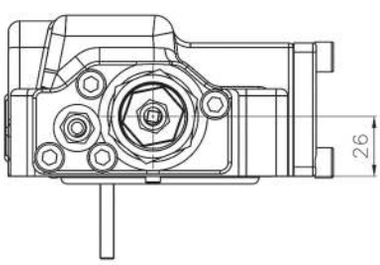

STANDARD DIMENSIONS

(mm)

MODEL	A
H3V63	22
H3V112	36
H3V140&180	57
H5V160 & 200	66

MODEL	A
H5V80	40.5
H5V140	48
H3V280	75.7
H5V160DPH & 200DPH	

REGULATOR
FOR 9C00 TYPE WITH MANIFOLD(BOLT)



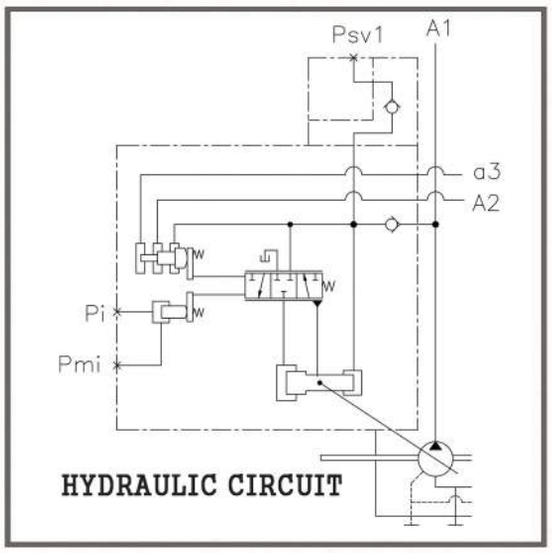

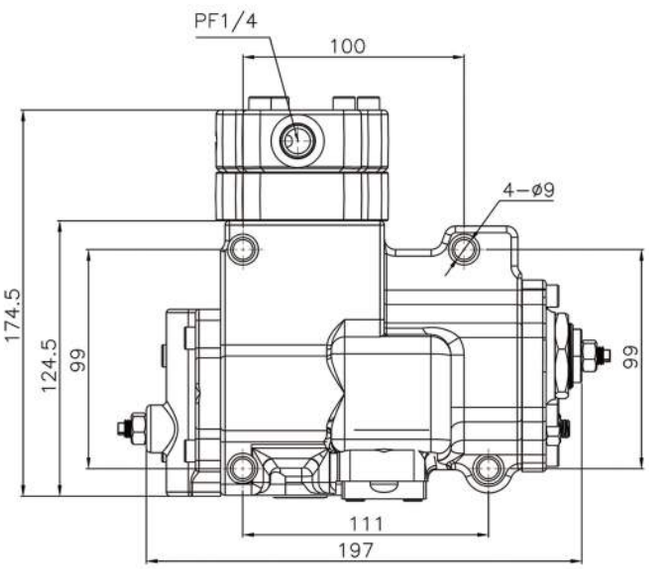

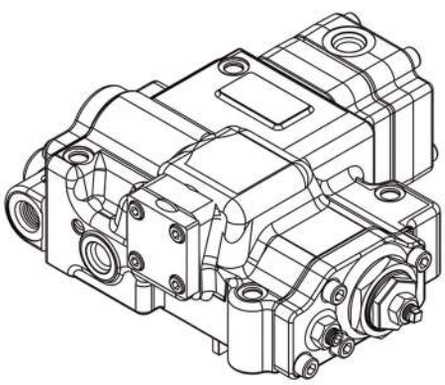

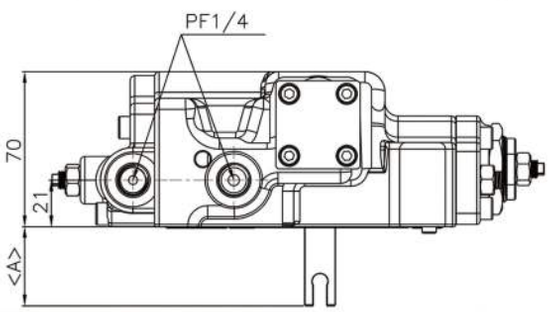

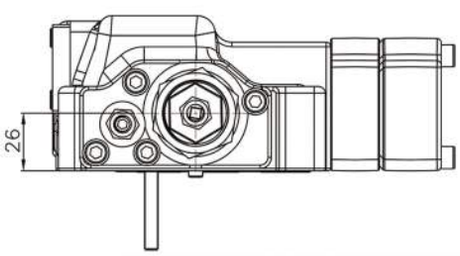

STANDARD DIMENSIONS

(mm)

MODEL	A
H3V63	22
H3V112	36
H3V140&180	57
H5V160 & 200	66

MODEL	A
H5V80	40.5
H5V140	48
H3V280	75.7
H5V160DPH & 200DPH	

REGULATOR
FOR 9C00 TYPE WITH MANIFOLD



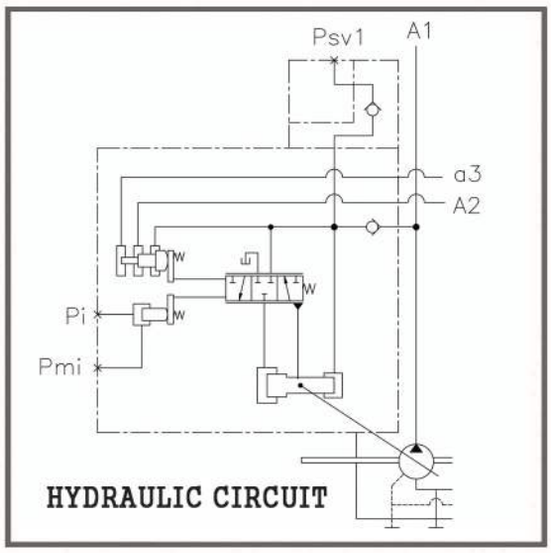

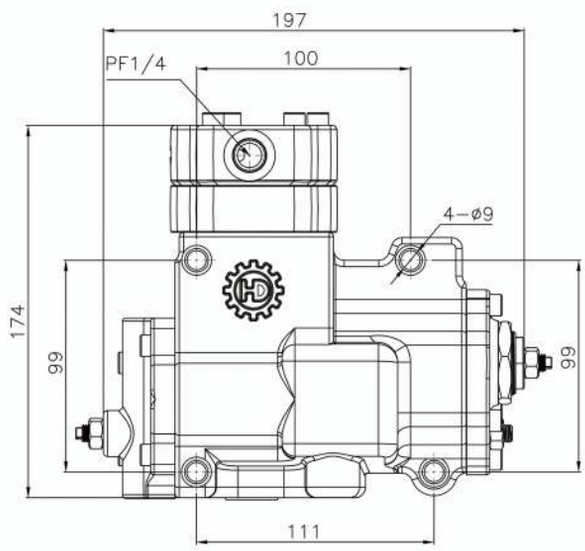

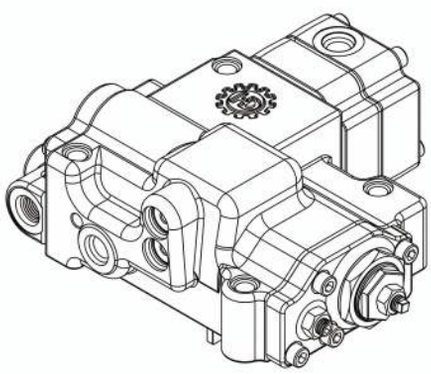

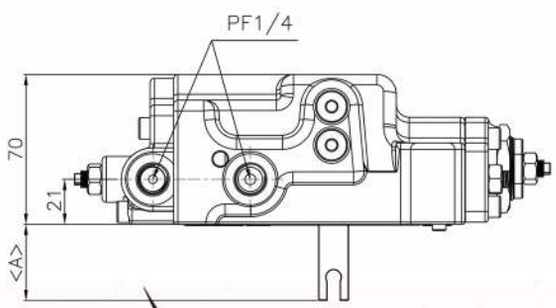

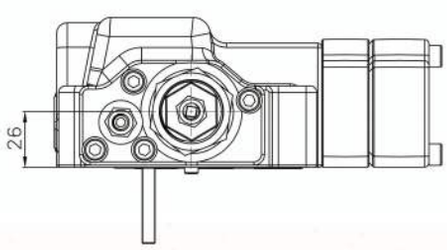

STANDARD DIMENSIONS

(mm)

MODEL	A
H3V63	22
H3V112	36
H3V140&180	57
H5V160 & 200	66

MODEL	A
H5V80	40.5
H5V140	48
H3V280	75.7
H5V160DPH & 200DPH	

REGULATOR FOR 9C00 TYPE WITH EPR

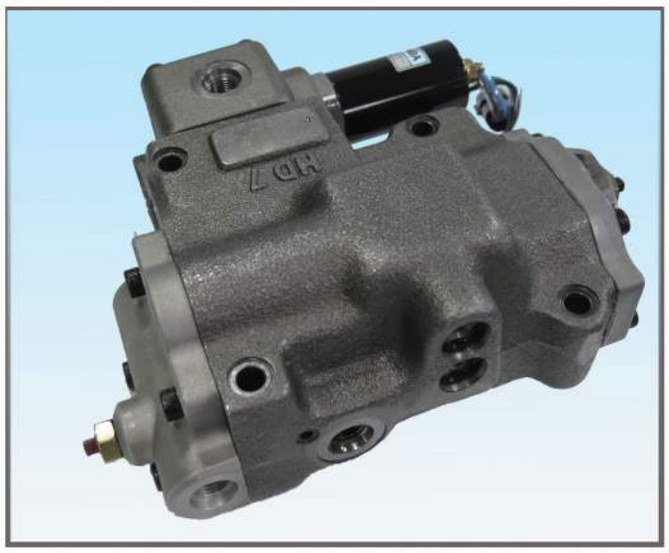

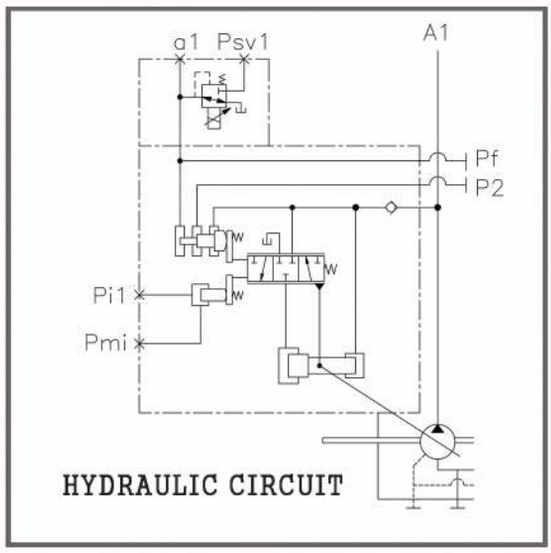

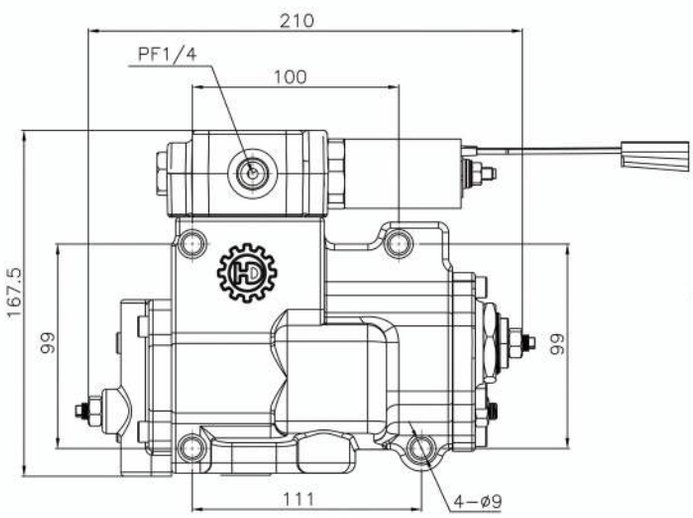

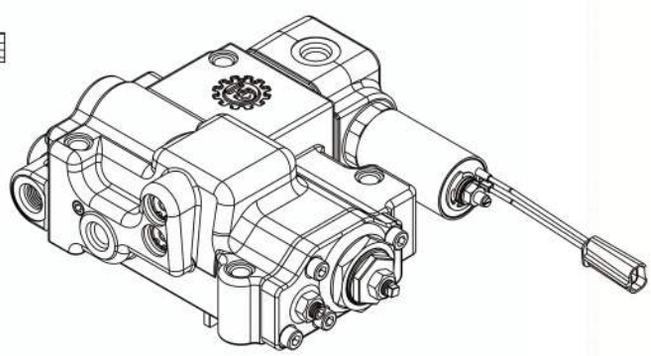

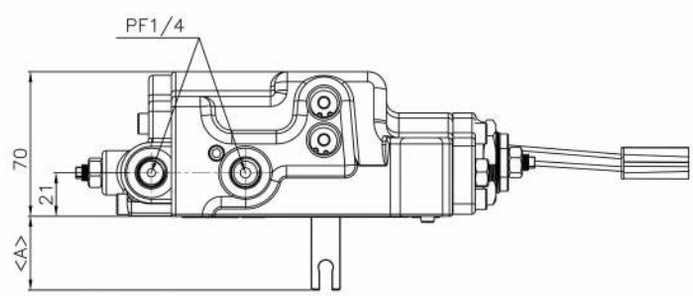

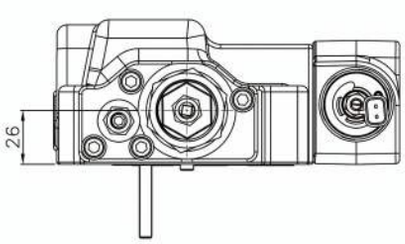

STANDARD DIMENSIONS

(mm)

MODEL	A
H3V63	22
H3V112	36
H3V140&180	57
H5V160 & 200	66

MODEL	A
H5V80	40.5
H5V140	48
H3V280	75.7
H5V160DPH & 200DPH	

REGULATOR
FOR 9C00 TYPE WITH EPR(4BOLT-DTH TYPE)

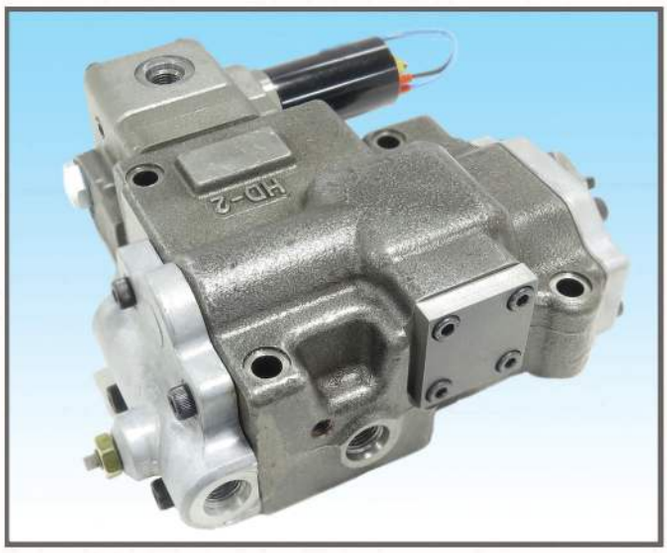

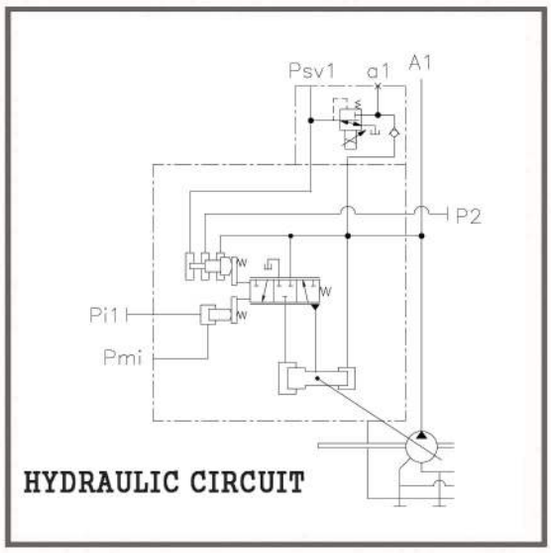

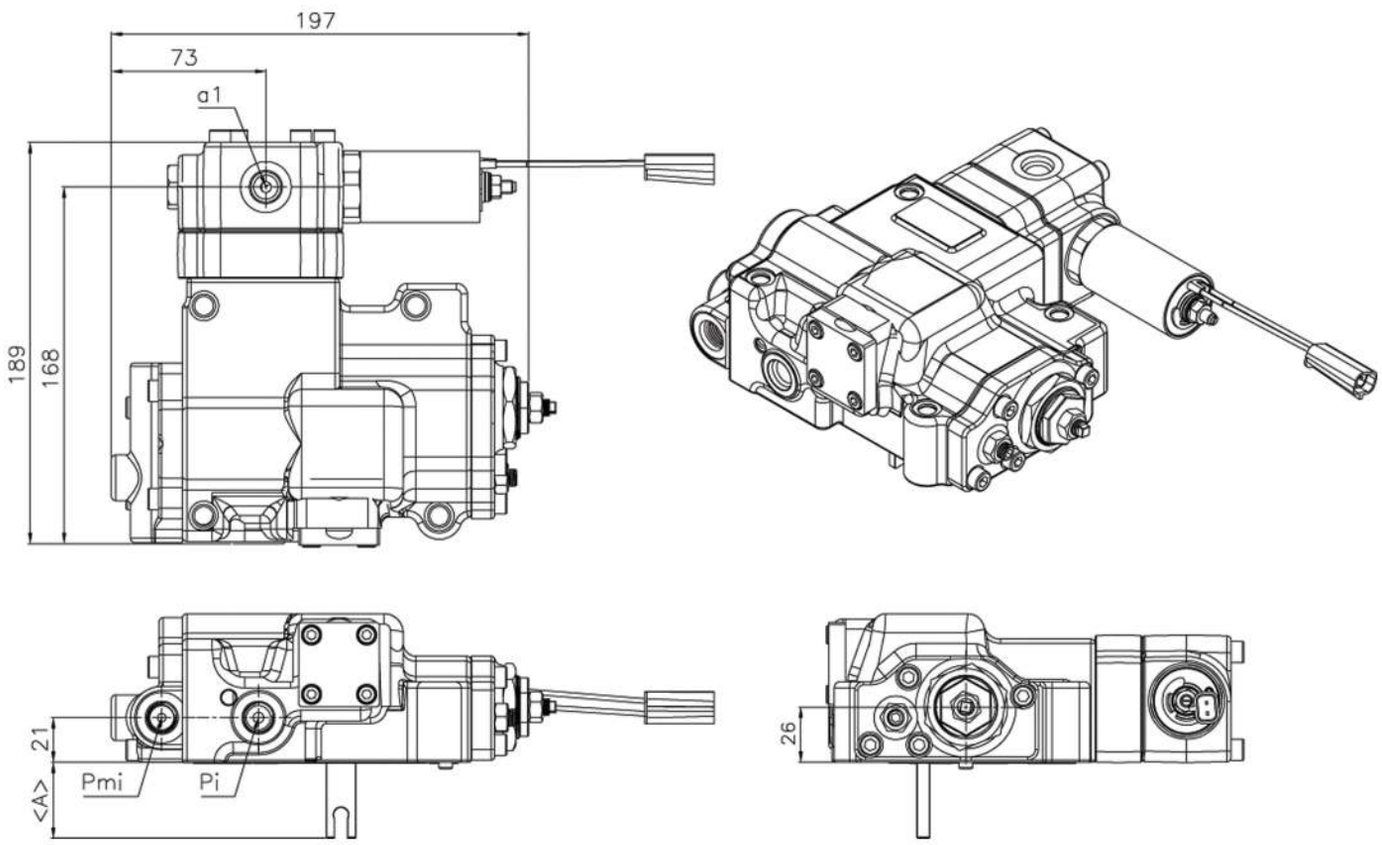

STANDARD DIMENSIONS

(mm)

MODEL	A
H3V63	22
H3V112	36
H3V140&180	57
H5V160 & 200	66

MODEL	A
H5V80	40.5
H5V140	48
H3V280	75.7
H5V160DPH & 200DPH	

REGULATOR FOR HN00 TYPE



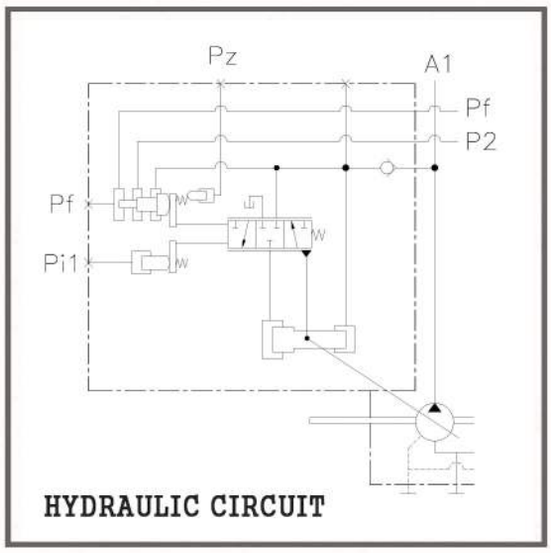

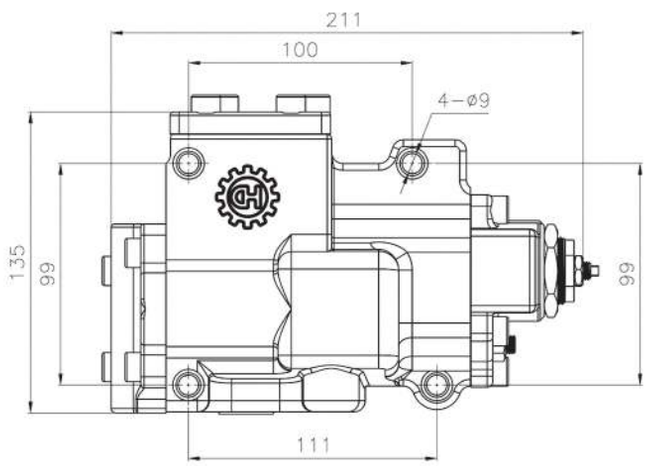

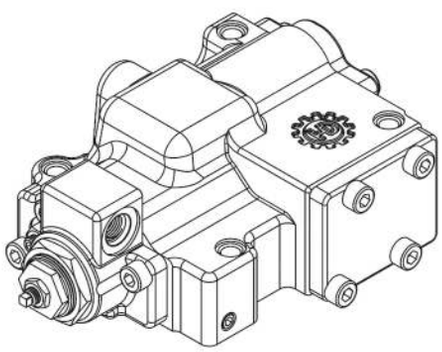

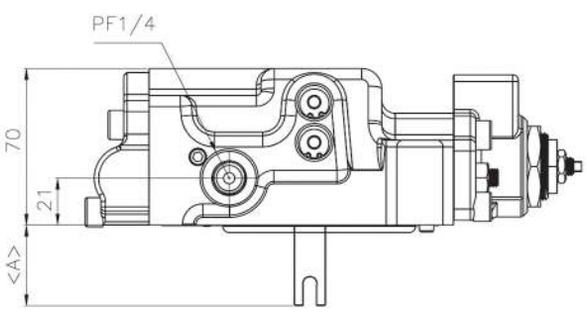

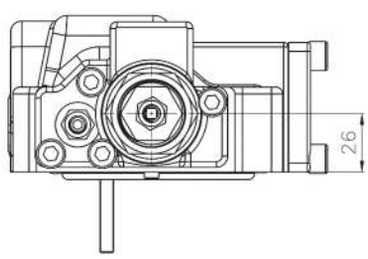

STANDARD DIMENSIONS

(mm)

MODEL	A
H3V63	22
H3V112	36
H3V140&180	57
H5V160 & 200	66

MODEL	A
H5V80	40.5
H5V140	48
H3V280	75.7
H5V160DPH & 200DPH	

REGULATOR
FOR HN00 TYPE WITH MANIFOLD(BOLT)



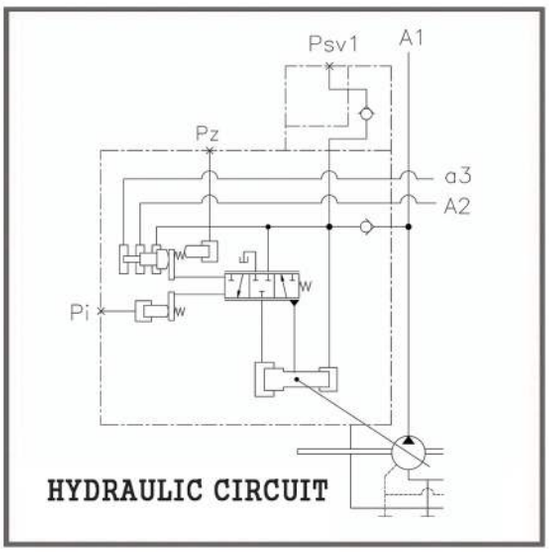

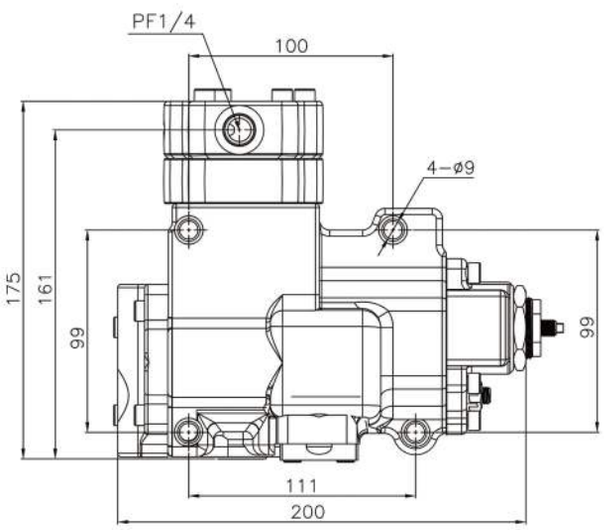

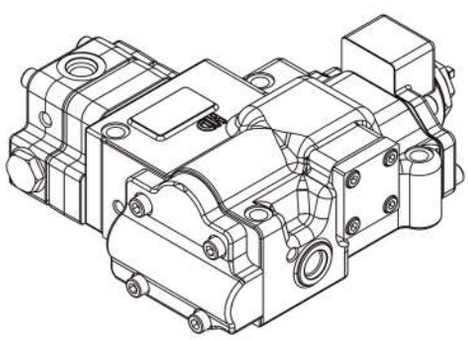

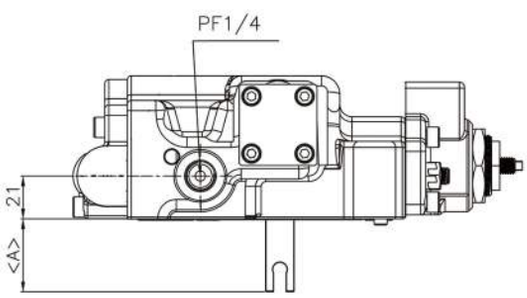

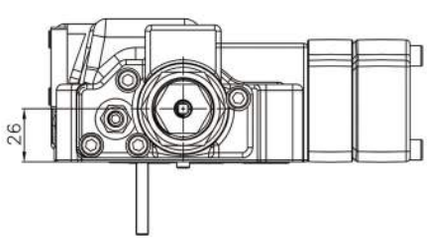

STANDARD DIMENSIONS

(mm)

MODEL	A
H3V63	22
H3V112	36
H3V140&180	57
H5V160 & 200	66

MODEL	A
H5V80	40.5
H5V140	48
H3V280	75.7
H5V160DPH & 200DPH	

REGULATOR
FOR HN00 TYPE WITH MANIFOLD



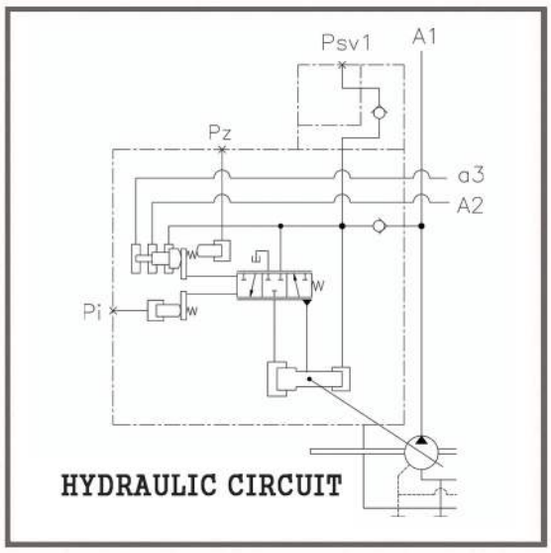

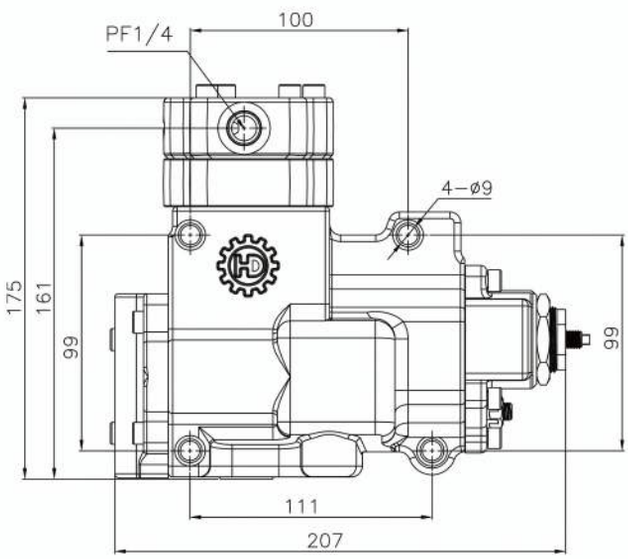

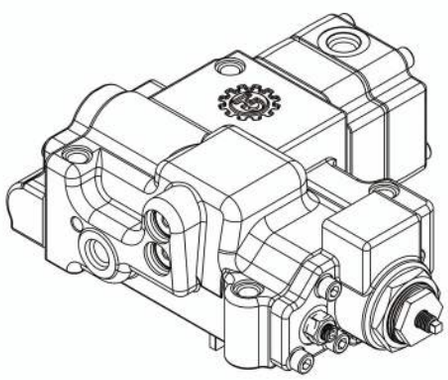

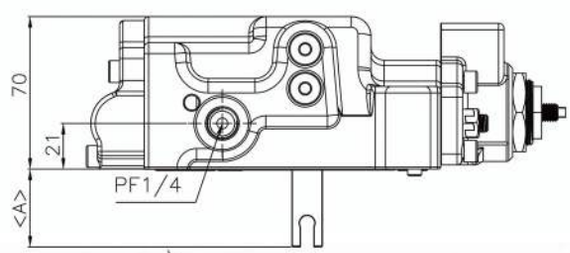

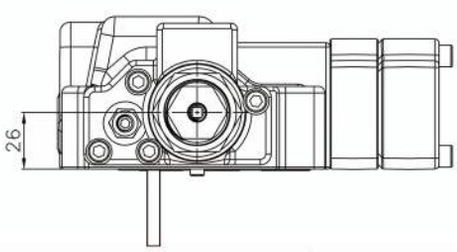

STANDARD DIMENSIONS

(mm)

MODEL	A
H3V63	22
H3V112	36
H3V140&180	57
H5V160 & 200	66

MODEL	A
H5V80	40.5
H5V140	48
H3V280	75.7
H5V160DPH & 200DPH	

REGULATOR FOR HN00 TYPE WITH EPR

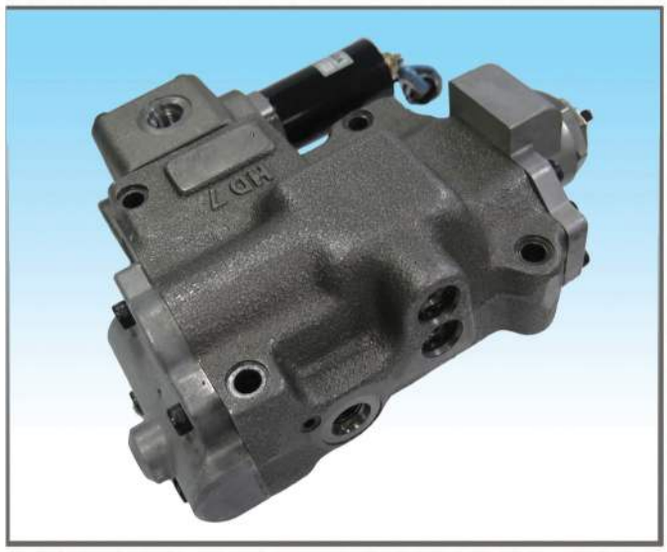

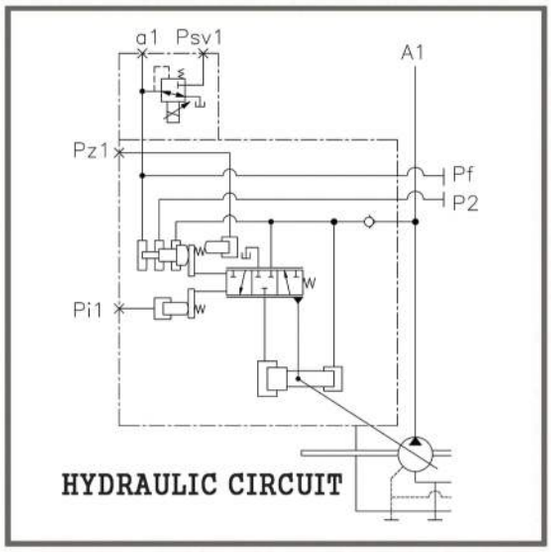

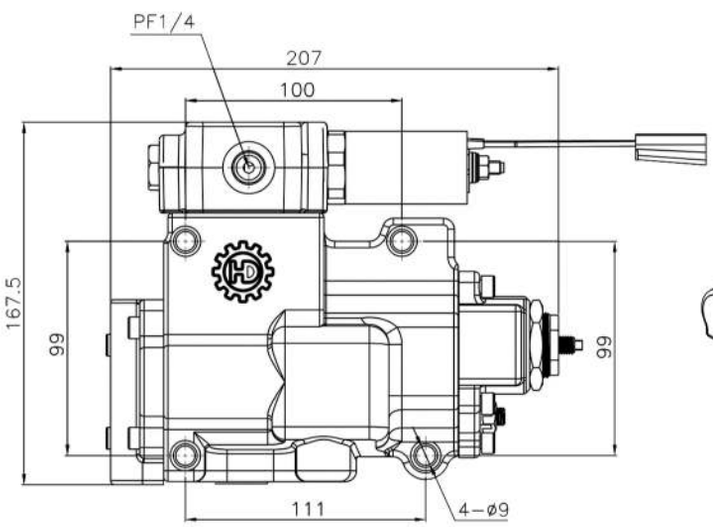

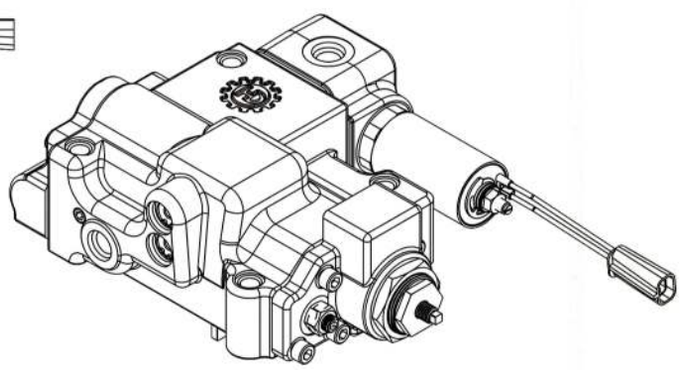

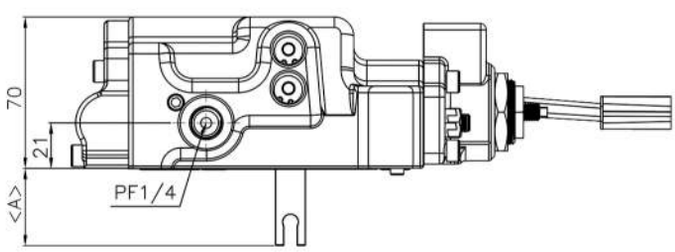

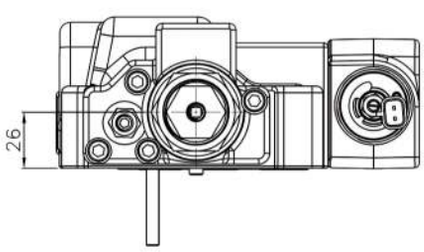

STANDARD DIMENSIONS

(mm)

MODEL	A
H3V63	22
H3V112	36
H3V140&180	57
H5V160 & 200	66

MODEL	A
H5V80	40.5
H5V140	48
H3V280	75.7
H5V160DPH & 200DPH	

REGULATOR
FOR HN00 TYPE WITH EPR(4BOLT-DTH)

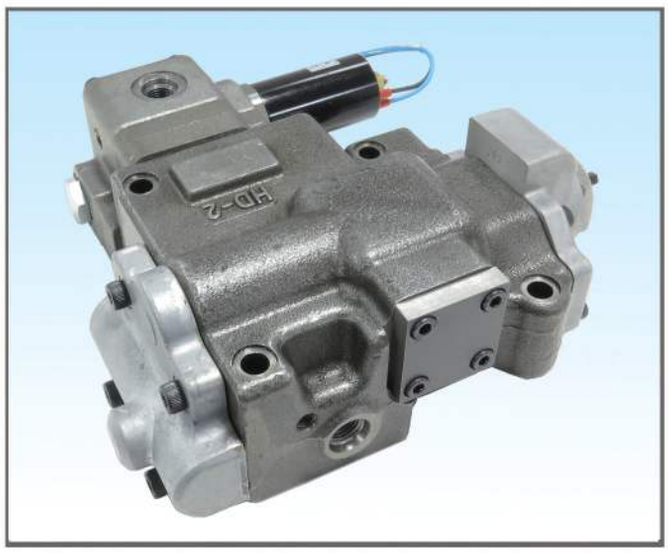

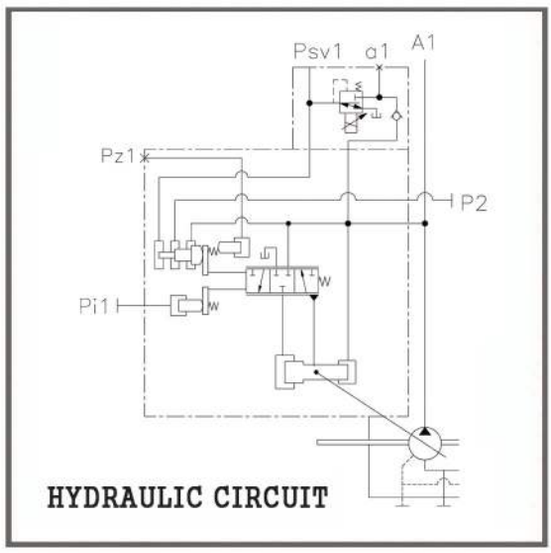

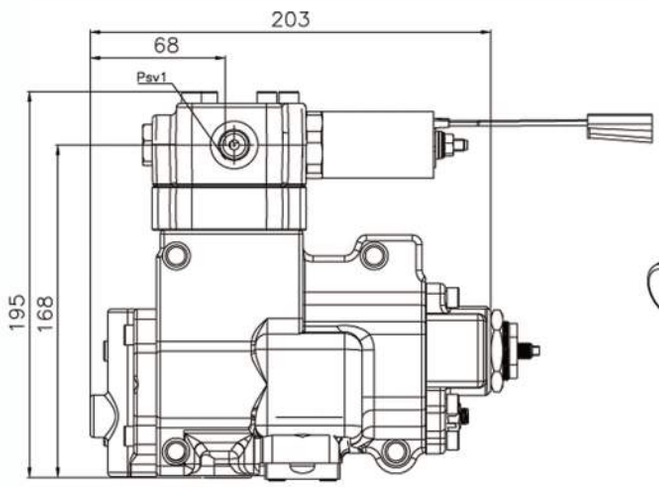

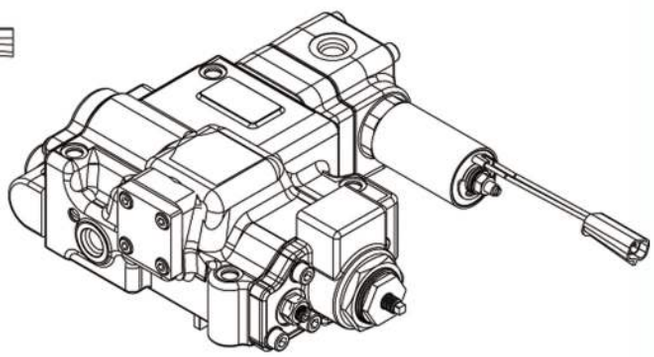

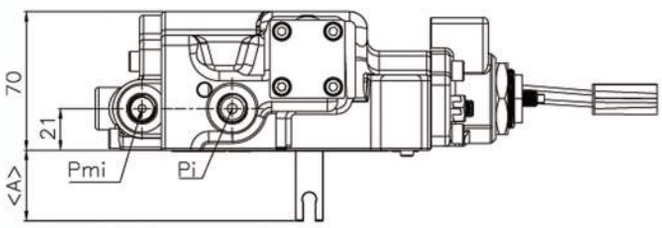

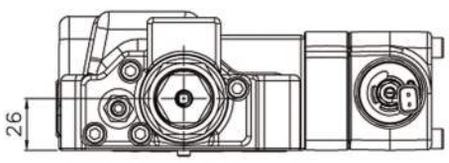

STANDARD DIMENSIONS

(mm)

MODEL	A
H3V63	22
H3V112	36
H3V140&180	57
H5V160 & 200	66

MODEL	A
H5V80	40.5
H5V140	48
H3V280	75.7
H5V160DPH & 200DPH	

REGULATOR FOR 5N00/6N00 TYPE



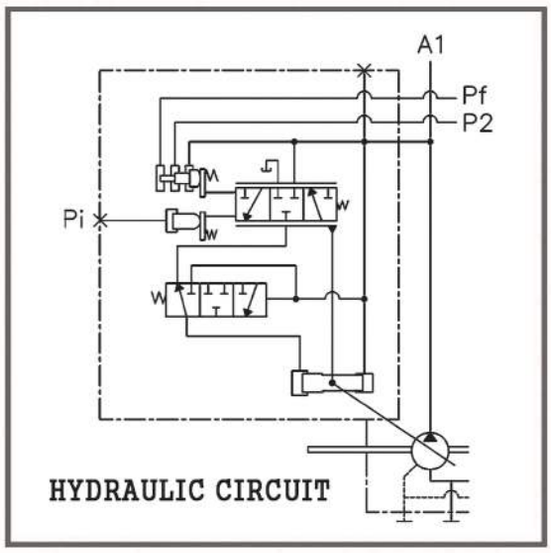

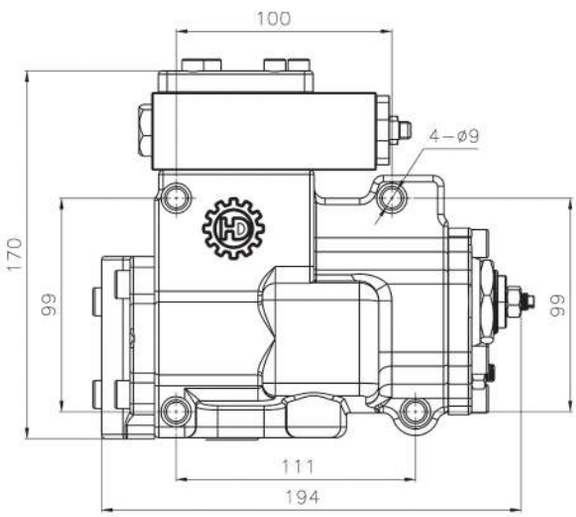

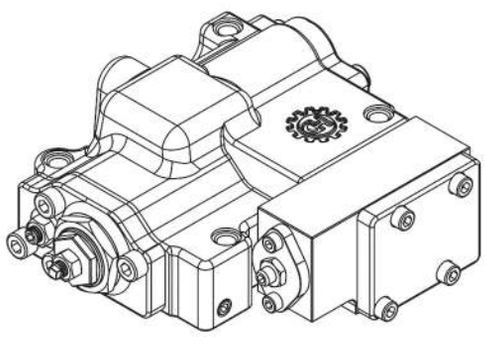

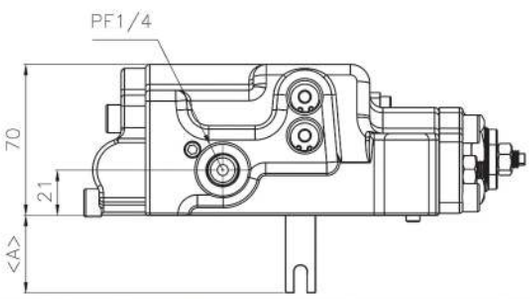

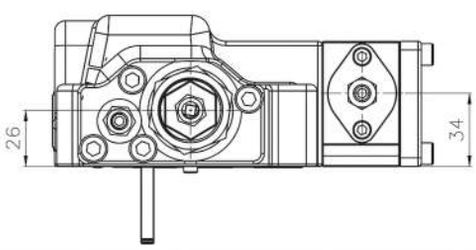

STANDARD DIMENSIONS

(mm)

MODEL	A
H3V63	22
H3V112	36
H3V140&180	57
H5V160 & 200	66

MODEL	A
H5V80	40.5
H5V140	48
H3V280	75.7
H5V160DPH & 200DPH	

REGULATOR FOR YT2K TYPE



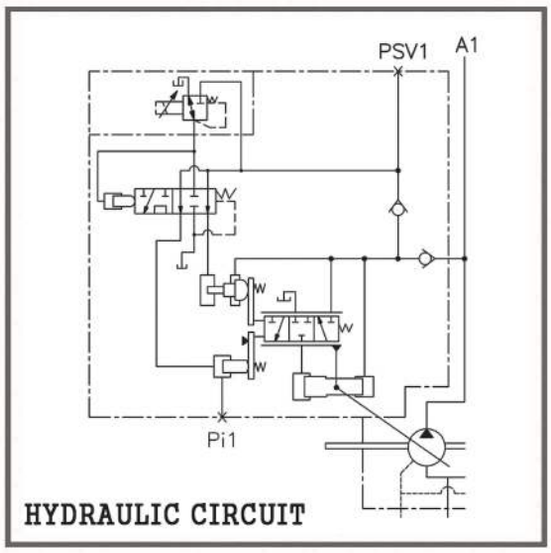

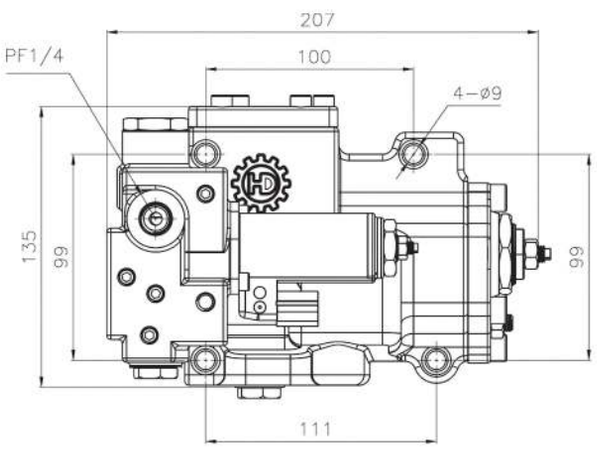

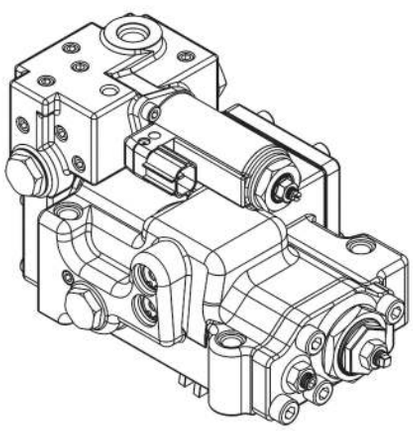

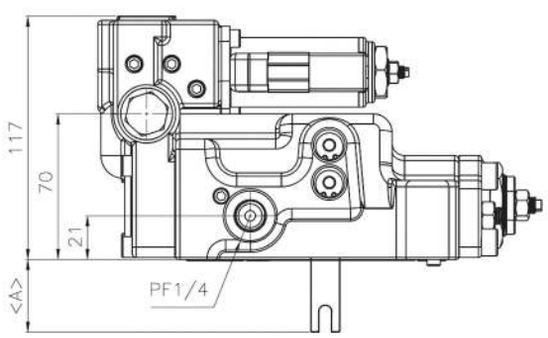

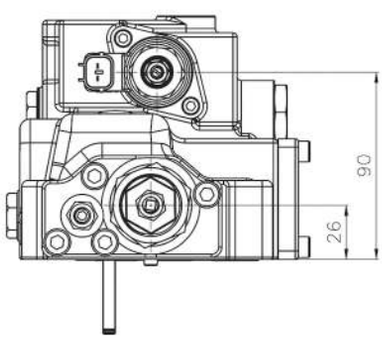

STANDARD DIMENSIONS

(mm)

MODEL	A
H3V63	22
H3V112	36
H3V140&180	57
H5V160 & 200	66

MODEL	A
H5V80	40.5
H5V140	48
H3V280	75.7
H5V160DPH & 200DPH	

REGULATOR FOR 9POF TYPE

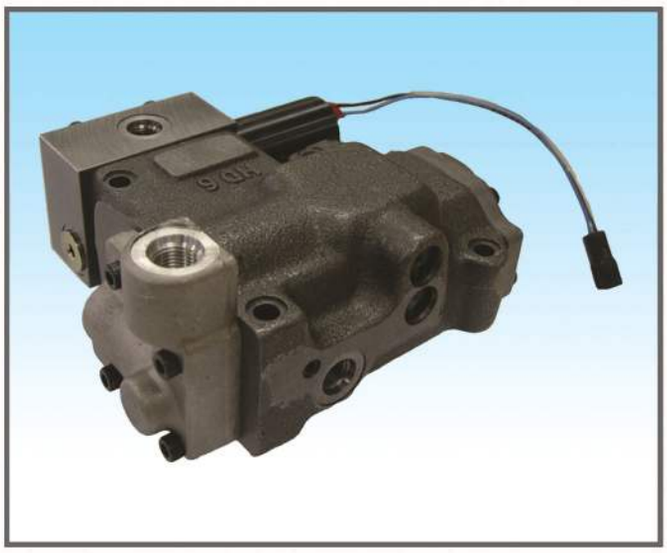

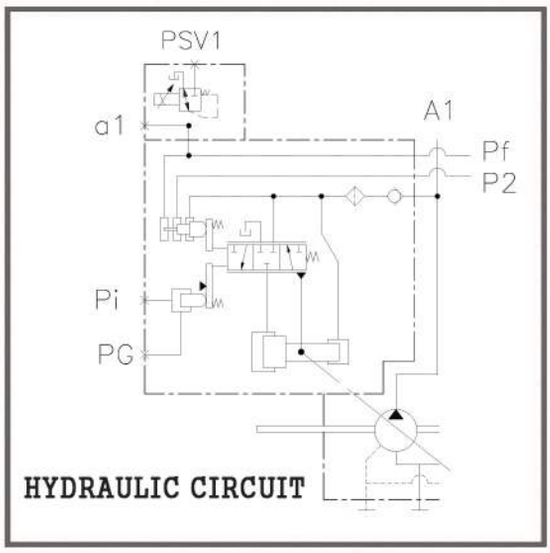

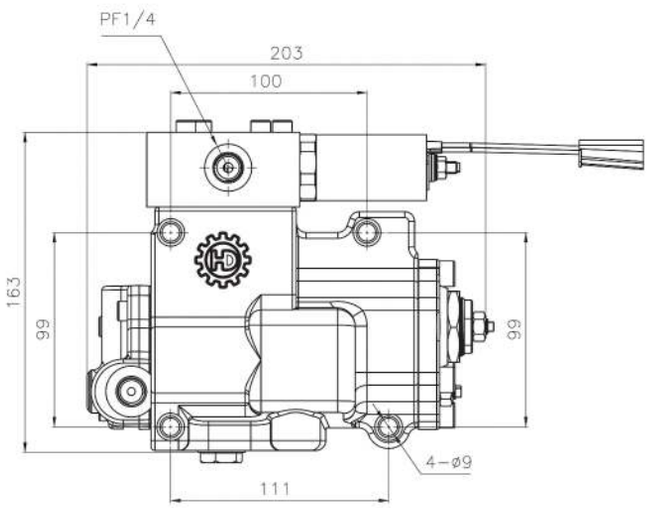

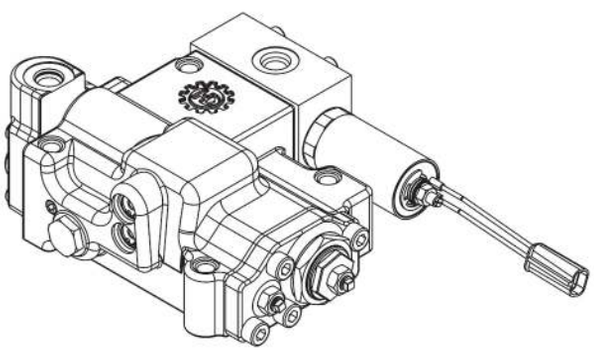

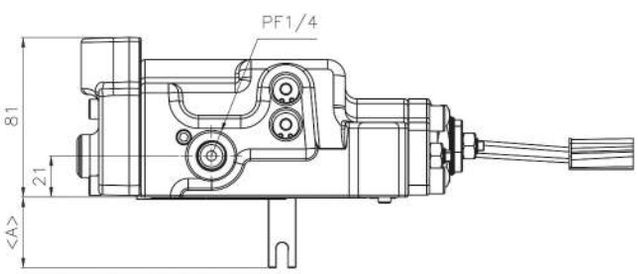

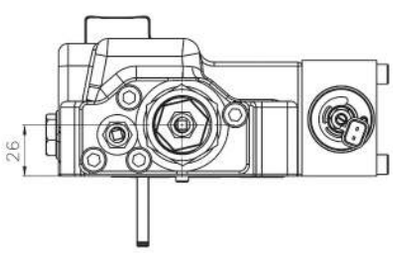

STANDARD DIMENSIONS

(mm)

MODEL	A
H3V63	22
H3V112	36
H3V140&180	57
H5V160 & 200	66

MODEL	A
H5V80	40.5
H5V140	48
H3V280	75.7
H5V160DPH & 200DPH	

REGULATOR FOR 9L00 TYPE

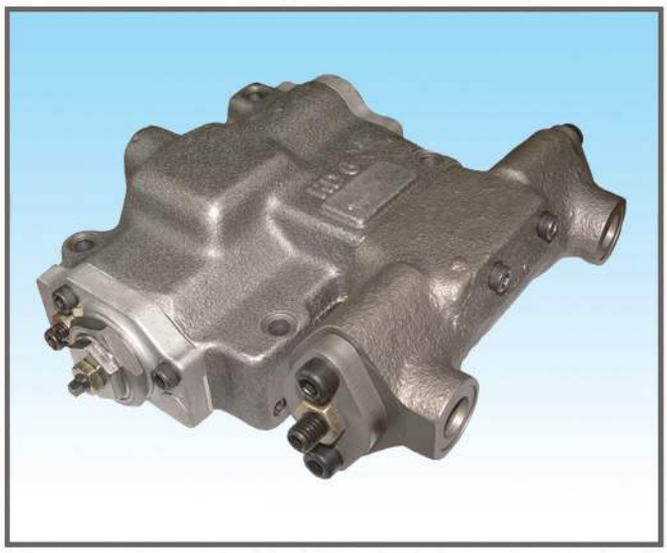

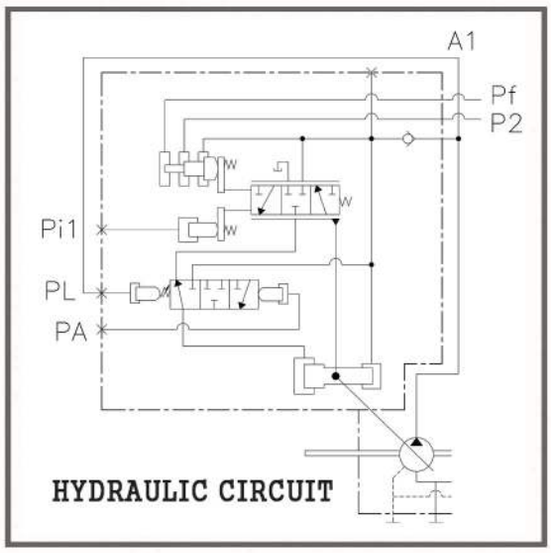

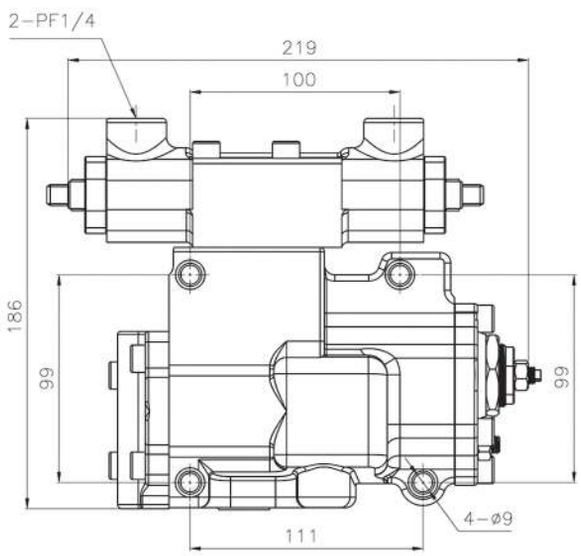

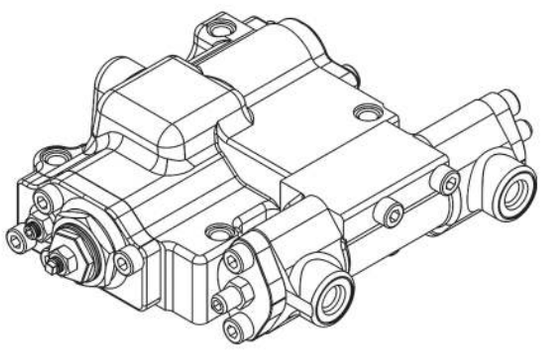

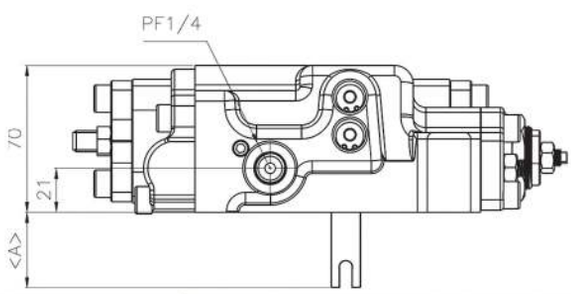

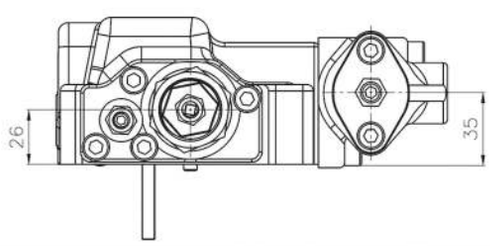

STANDARD DIMENSIONS

(mm)

MODEL	A
H3V63	22
H3V112	36
H3V140&180	57
H5V160 & 200	66

MODEL	A
H5V80	40.5
H5V140	48
H3V280	75.7
H5V160DPH & 200DPH	

REGULATOR FOR HLOP TYPE

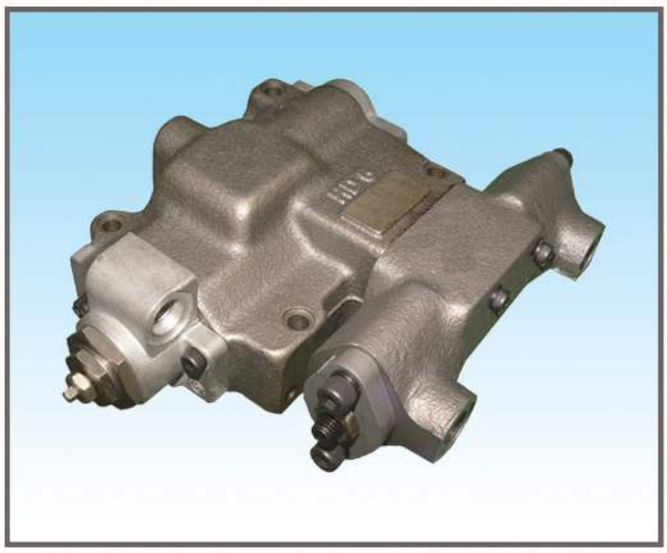

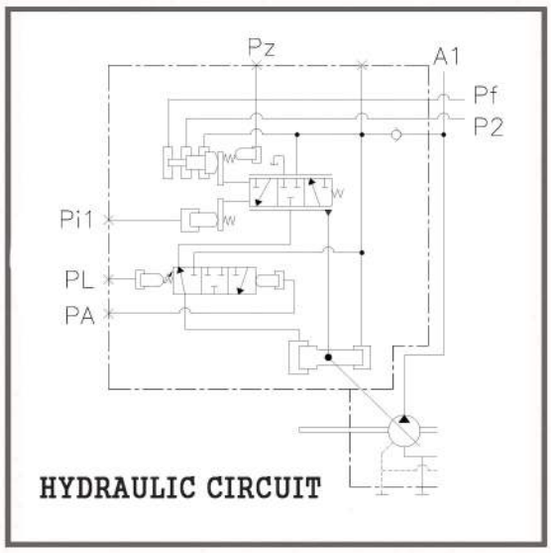

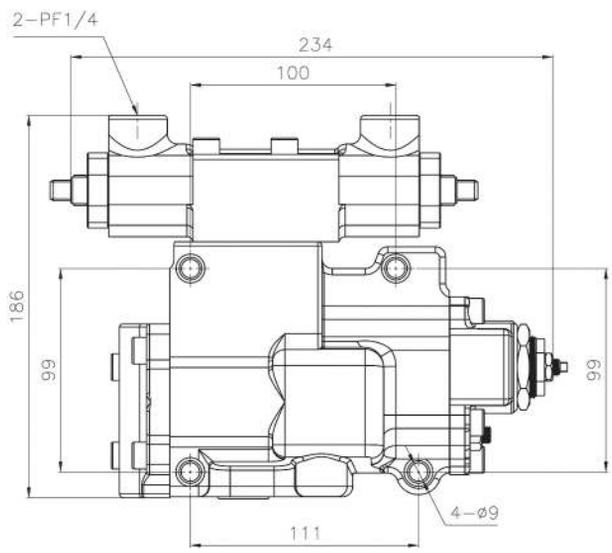

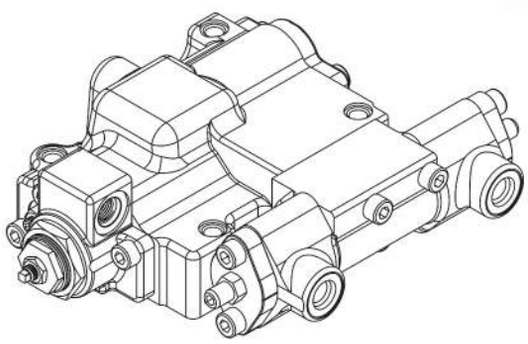

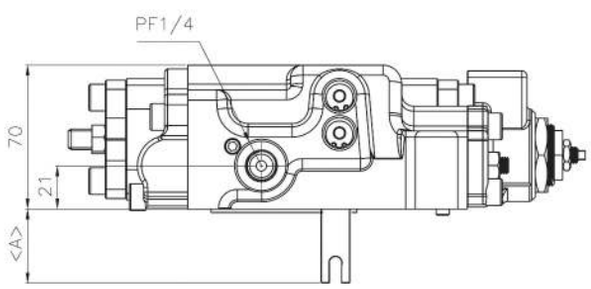

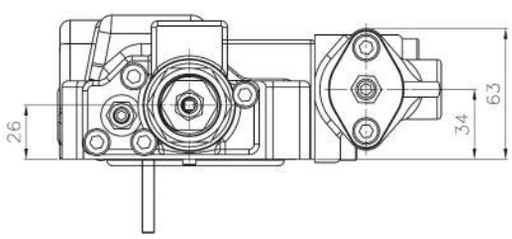

STANDARD DIMENSIONS

(mm)

MODEL	A
H3V63	22
H3V112	36
H3V140&180	57
H5V160 & 200	66

MODEL	A
H5V80	40.5
H5V140	48
H3V280	75.7
H5V160DPH & 200DPH	

REGULATOR FOR 9TIL TYPE

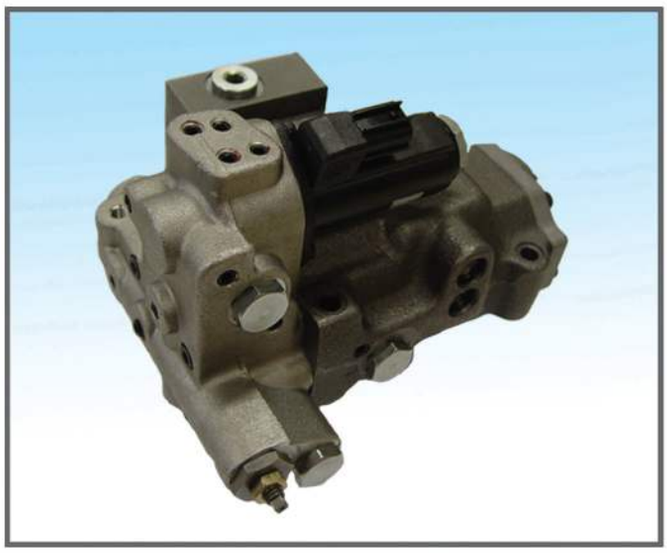

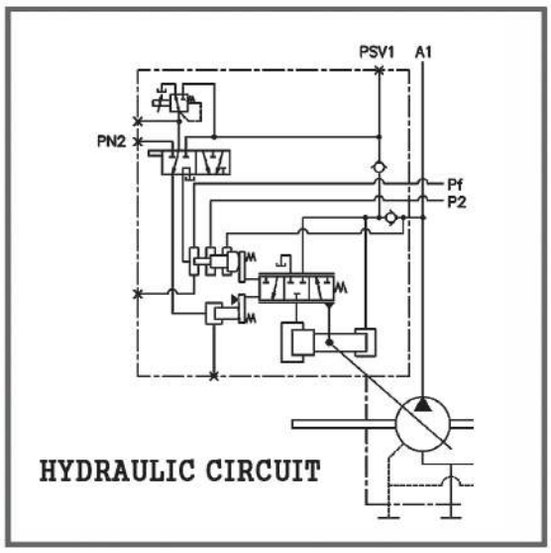

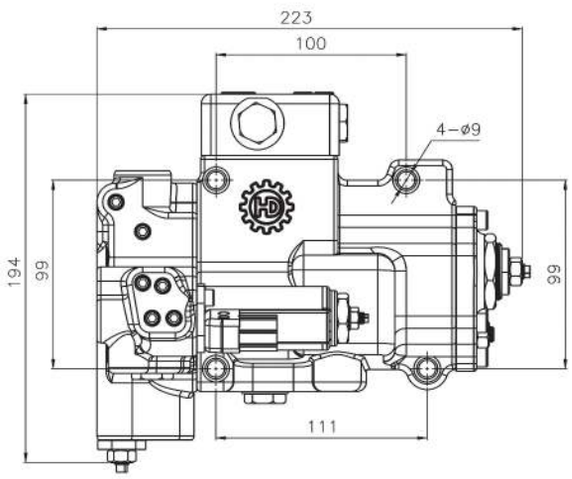

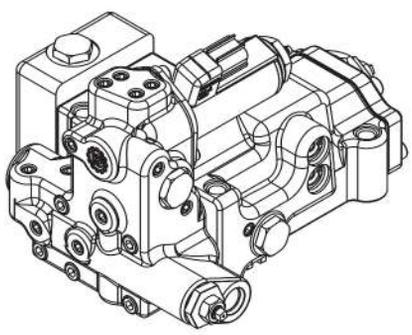

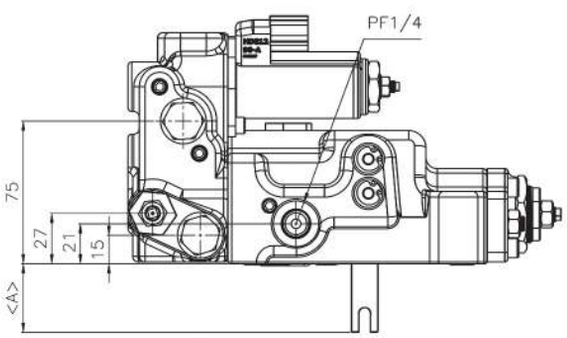

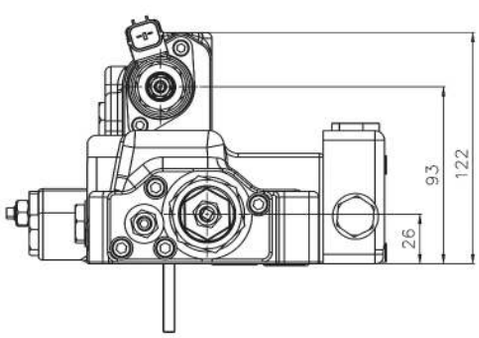

STANDARD DIMENSIONS

(mm)

MODEL	A
H3V63	22
H3V112	36
H3V140&180	57
H5V160 & 200	66

MODEL	A
H5V80	40.5
H5V140	48
H3V280	75.7
H5V160DPH & 200DPH	

REGULATOR TYPE FOR 9Y00 TYPE WITH LOAD SENSING

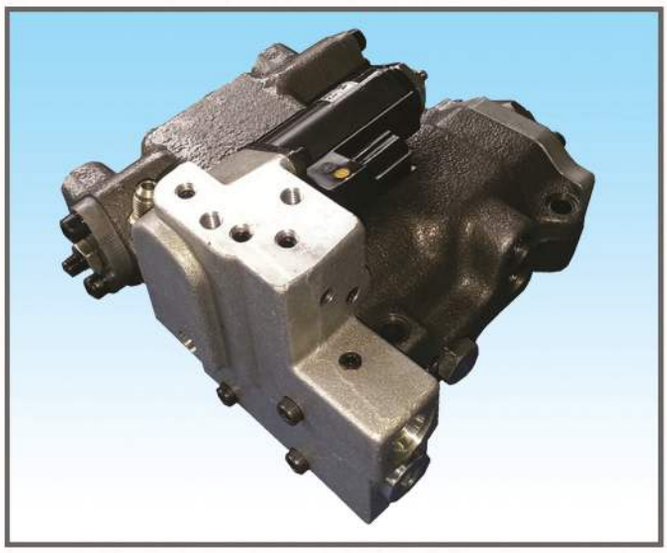

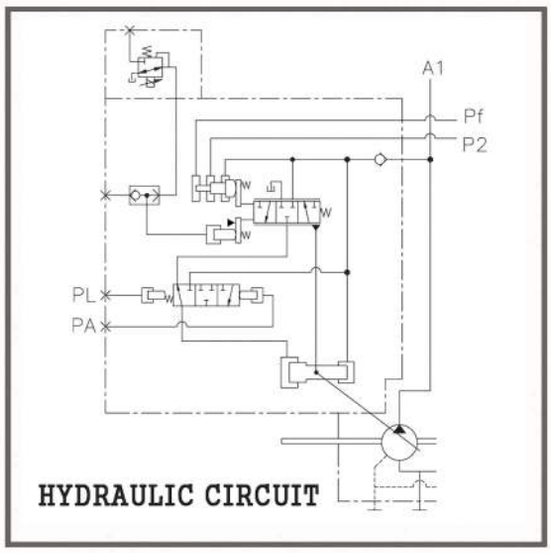

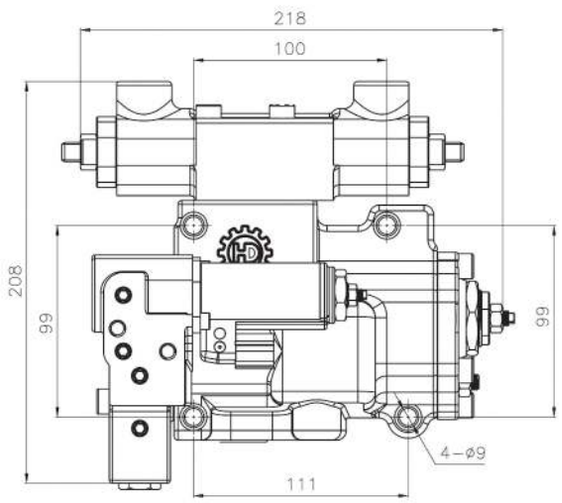

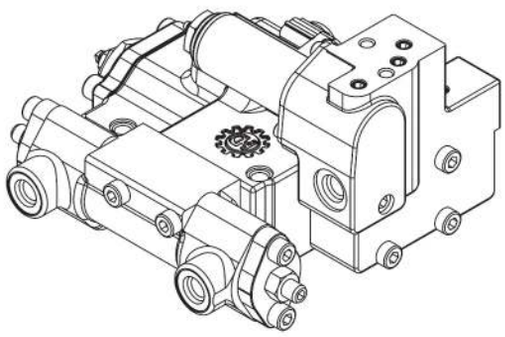

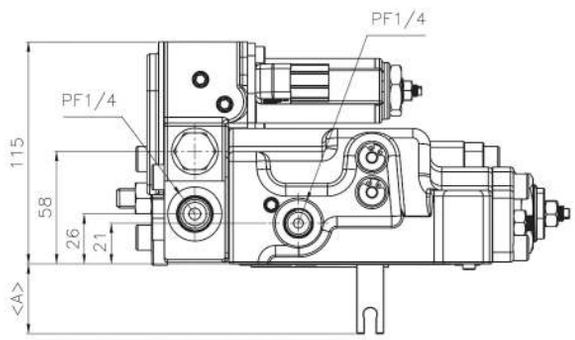

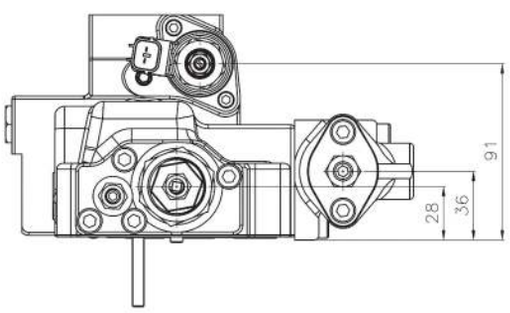

STANDARD DIMENSIONS

(mm)

MODEL	A
H3V63	22
H3V112	36
H3V140&180	57
H5V160 & 200	66

MODEL	A
H5V80	40.5
H5V140	48
H3V280	75.7
H5V160DPH & 200DPH	

REGULATOR FOR 9Y00 TYPE(FRONT)



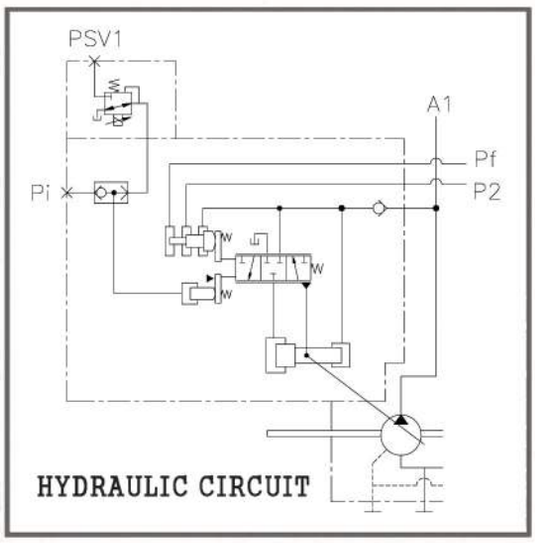

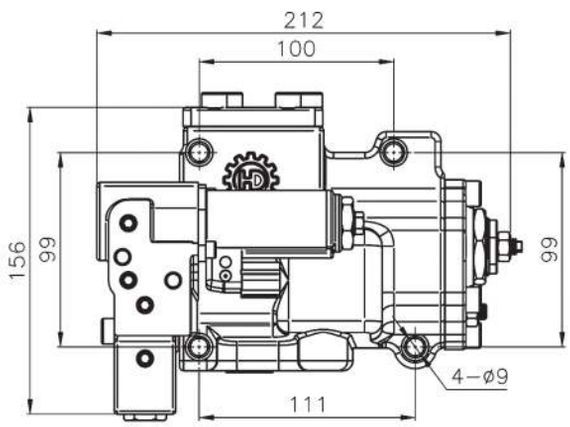

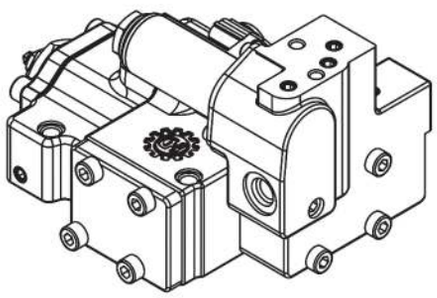

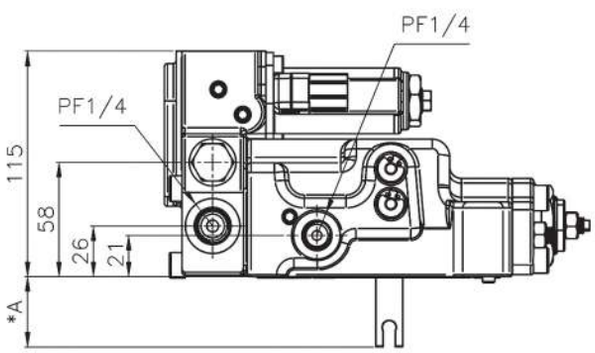

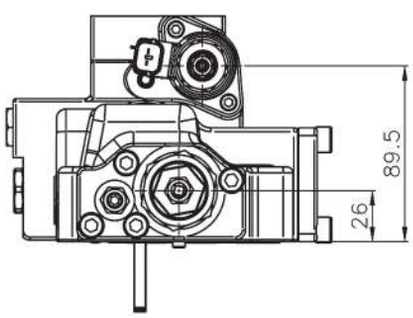

STANDARD DIMENSIONS

(mm)

MODEL	A
H3V63	22
H3V112	36
H3V140&180	57
H5V160 & 200	66

MODEL	A
H5V80	40.5
H5V140	48
H3V280	75.7
H5V160DPH & 200DPH	

REGULATOR FOR 9Y00 TYPE (REAR)

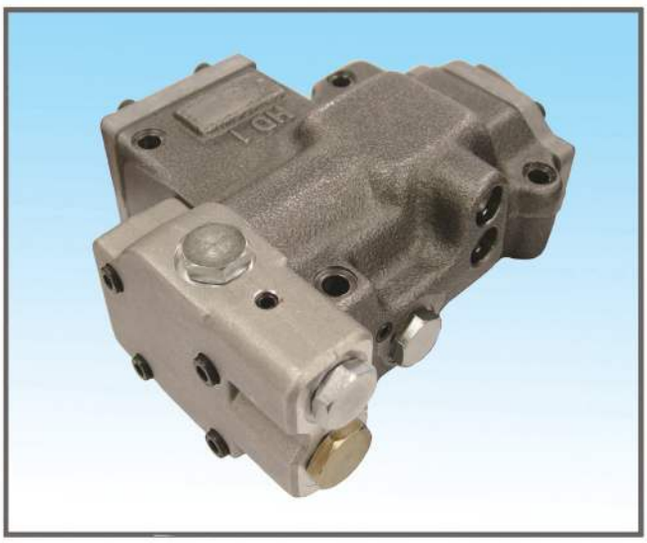

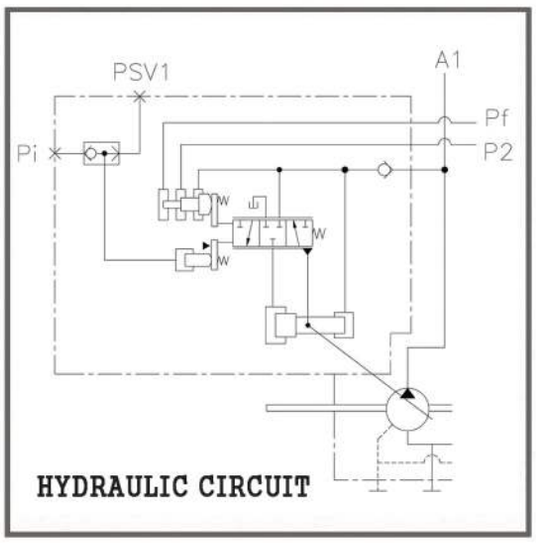

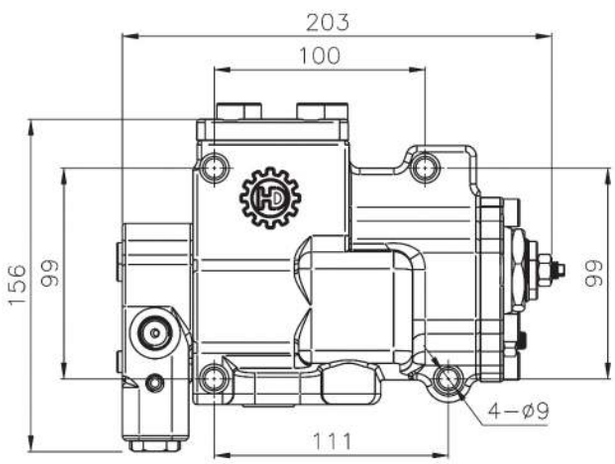

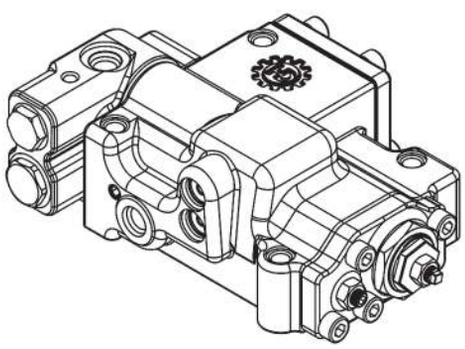

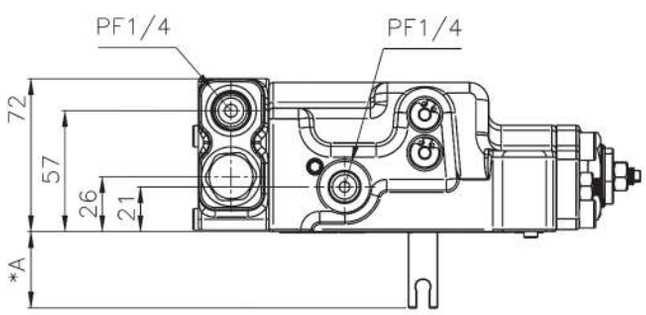

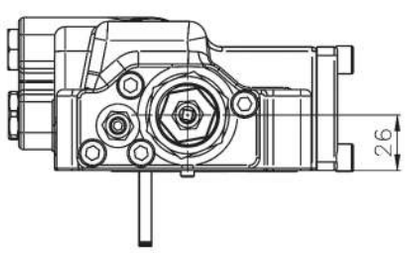

STANDARD DIMENSIONS

(mm)

MODEL	A
H3V63	22
H3V112	36
H3V140&180	57
H5V160 & 200	66

MODEL	A
H5V80	40.5
H5V140	48
H3V280	75.7
H5V160DPH & 200DPH	

REGULATOR FOR SK3D TYPE



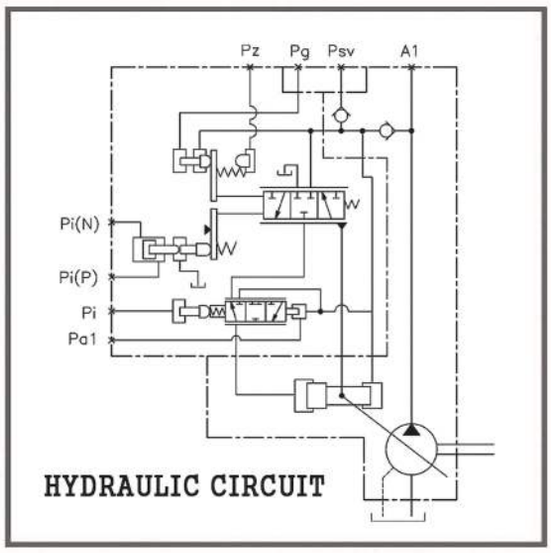

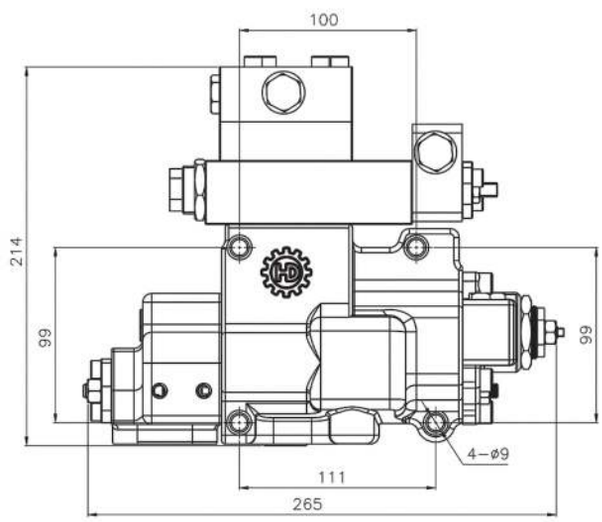

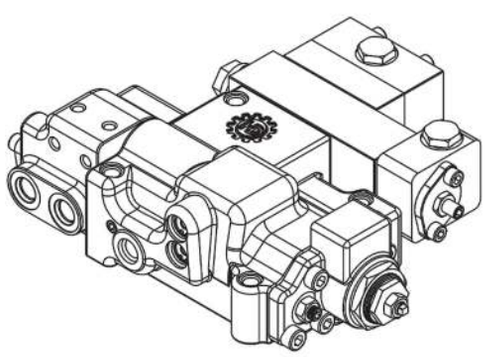

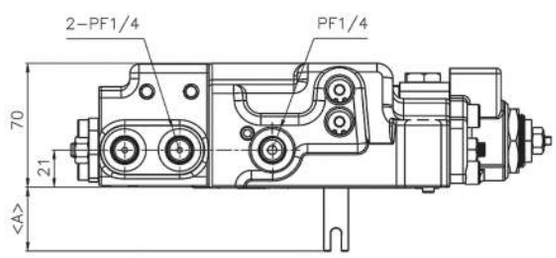

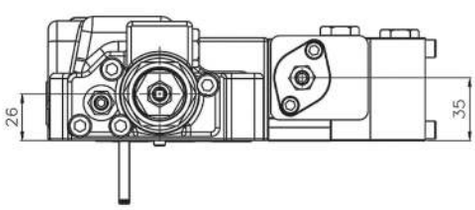

STANDARD DIMENSIONS

(mm)

MODEL	A
H3V63	22
H3V112	36
H3V140&180	57
H5V160 & 200	66

MODEL	A
H5V80	40.5
H5V140	48
H3V280	75.7
H5V160DPH & 200DPH	

REGULATOR FOR OE01 TYPE(HITACHI)

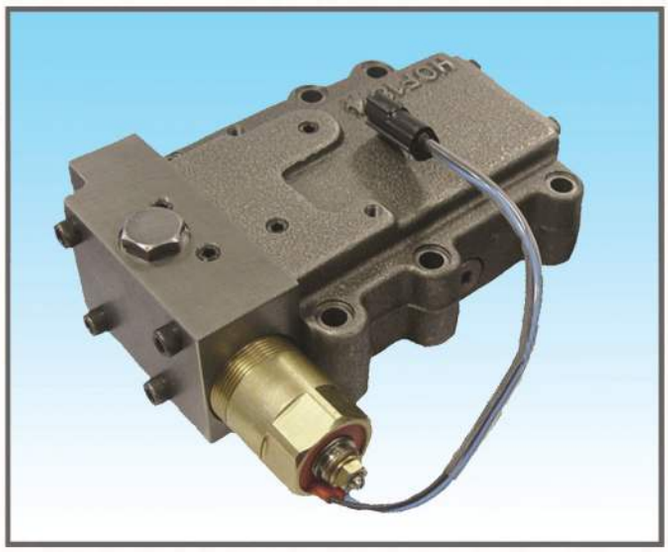

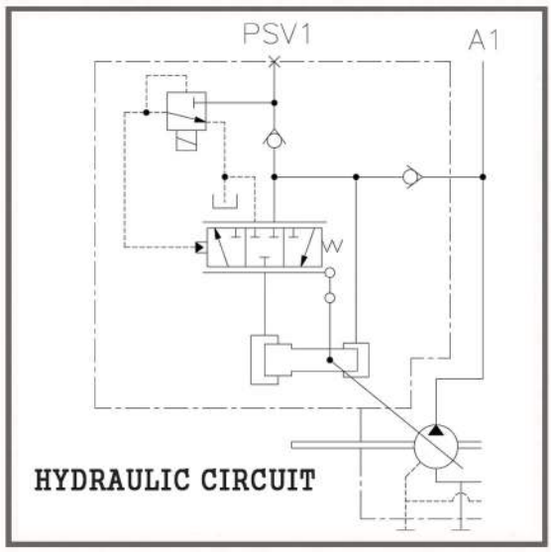

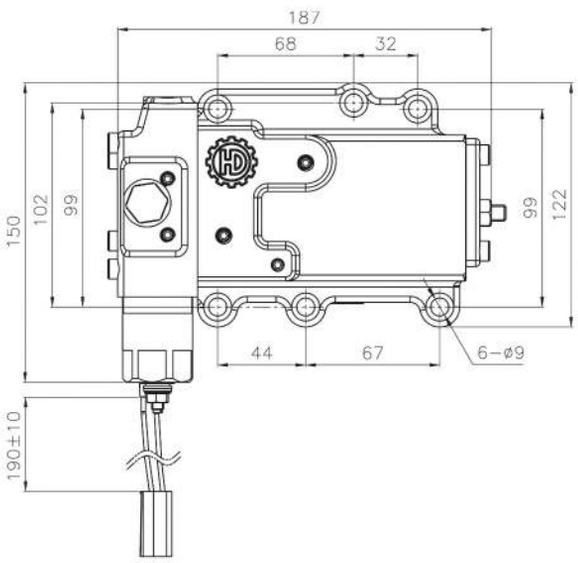

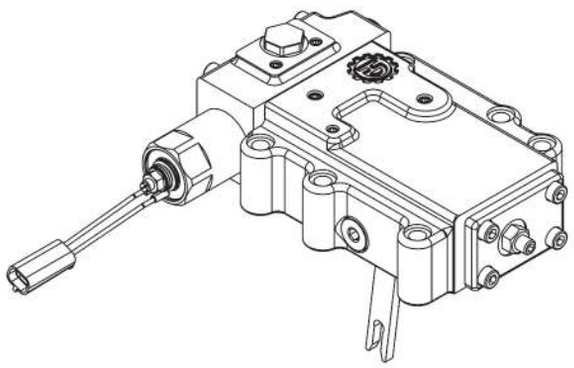

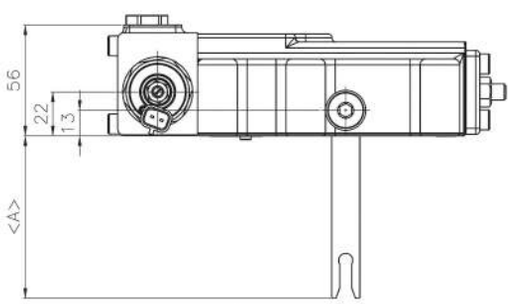

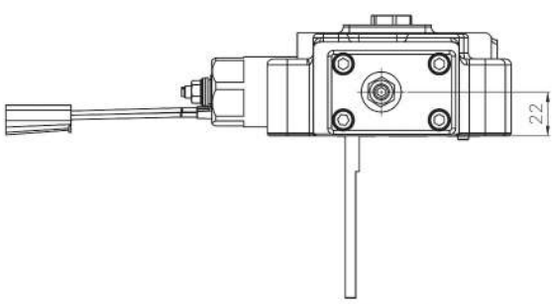

STANDARD DIMENSIONS

(mm)

MODEL	A
H3V63	25
H3V112	36
H3V140&180	61.3
H5V160 & 200	70

MODEL	A
H5V80	48
H5V140	53.8
H3V280	81
H5V160DPH & 200DPH	

REGULATOR FOR OE02 TYPE(NORMAL)

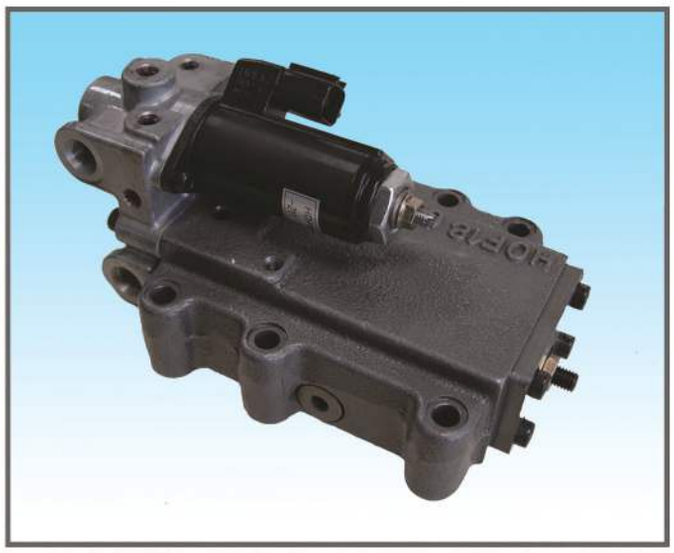

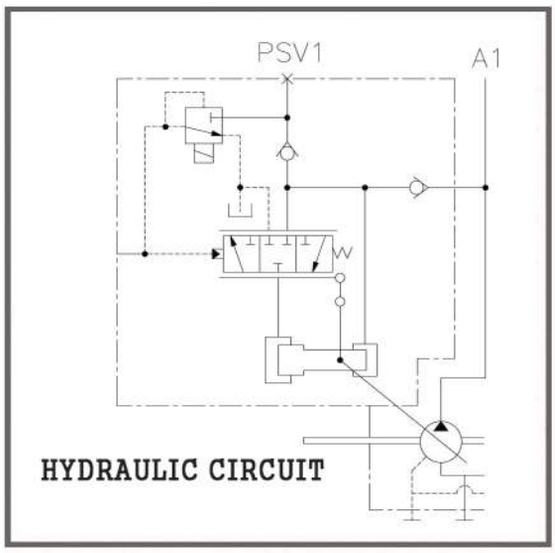

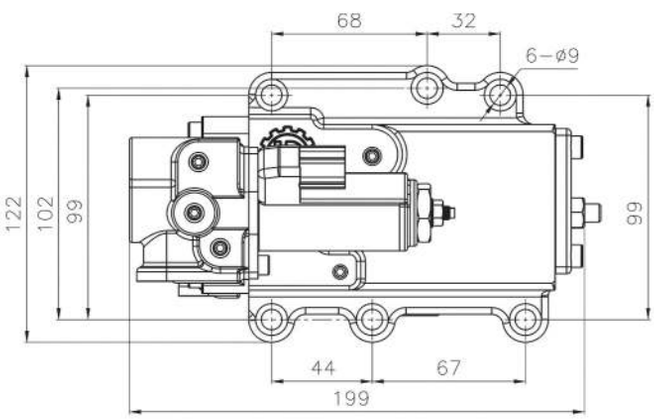

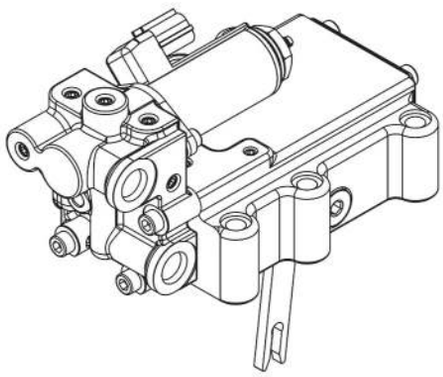

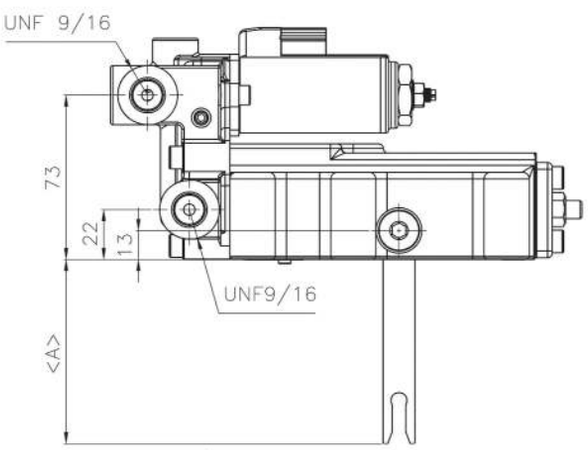

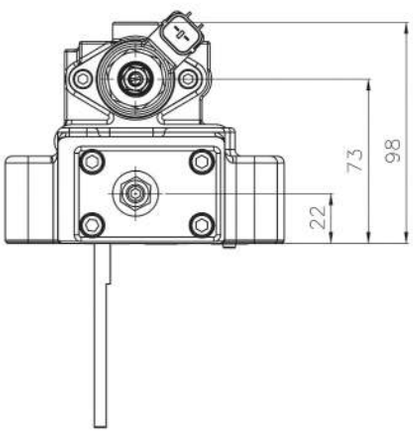

STANDARD DIMENSIONS

(mm)

MODEL	A
H3V63	25
H3V112	36
H3V140&180	61.3
H5V160 & 200	70

MODEL	A
H5V80	48
H5V140	53.8
H3V280	81
H5V160DPH & 200DPH	

REGULATOR FOR 9TDL/BL/CL TYPE

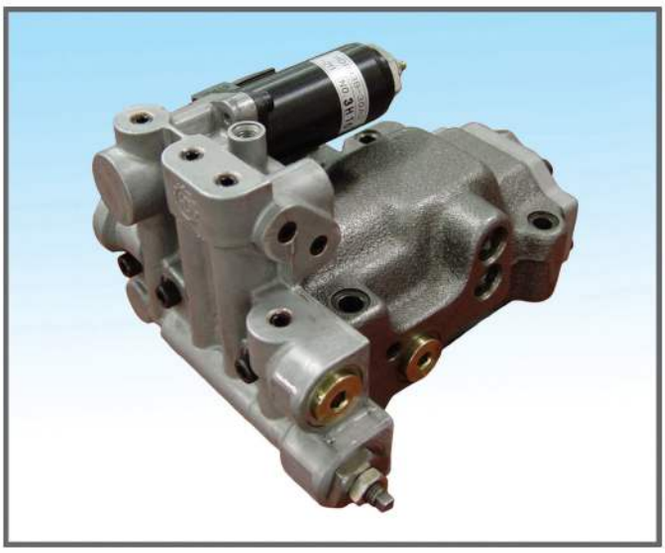

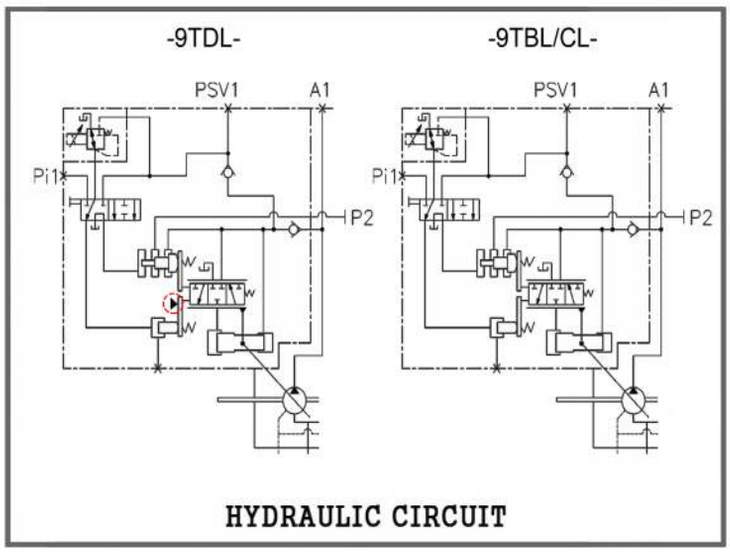

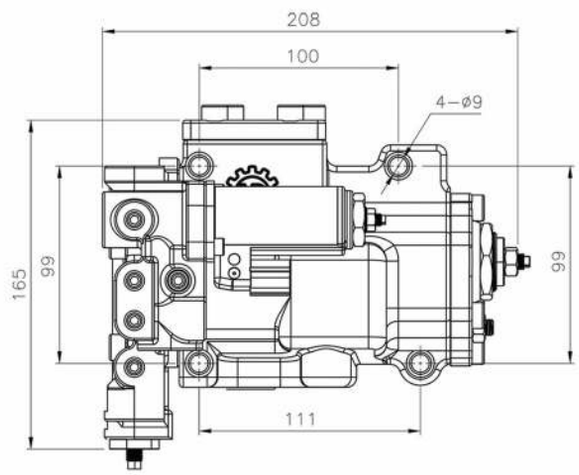

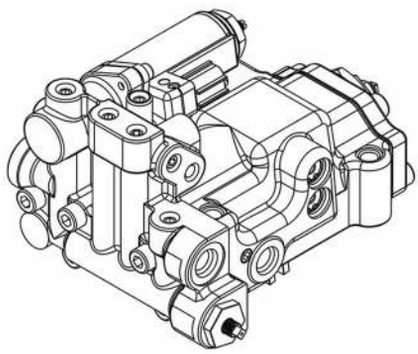

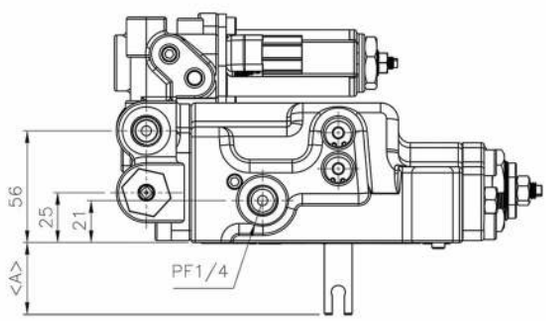

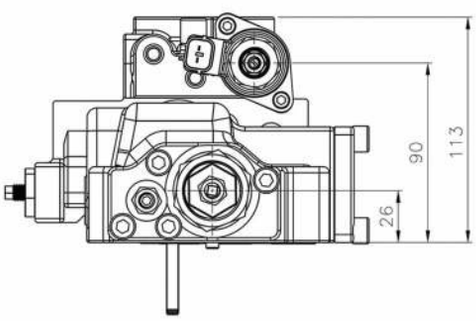

STANDARD DIMENSIONS

(mm)

MODEL	A
H3V63	22
H3V112	36
H3V140&180	57
H5V160 & 200	66

MODEL	A
H5V80	40.5
H5V140	48
H3V280	75.7
H5V160DPH & 200DPH	

REGULATOR FOR 9TFL/AS/EL/GL/HL/8L TYPE



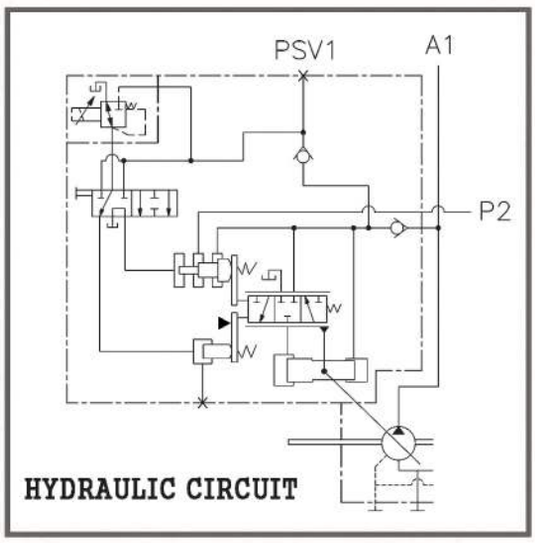

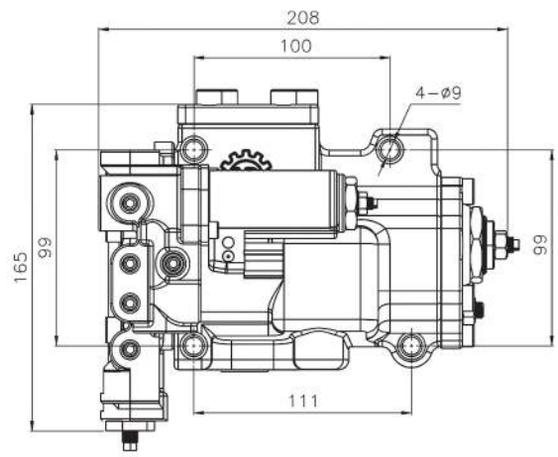

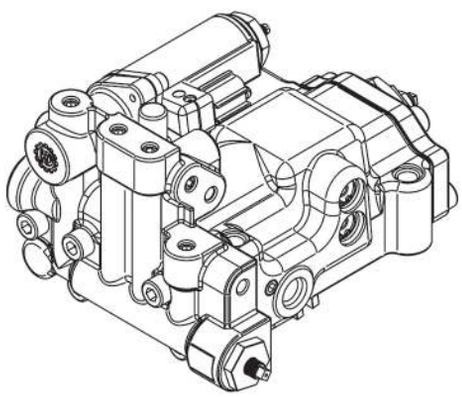

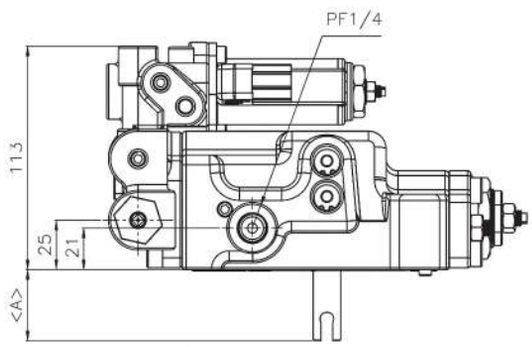

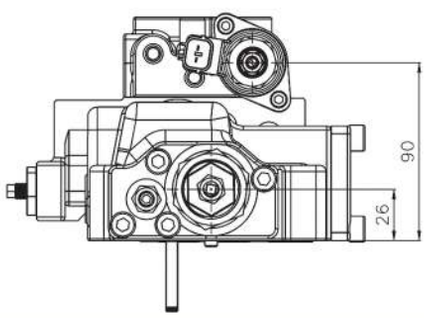

STANDARD DIMENSIONS

(mm)

MODEL	A
H3V63	22
H3V112	36
H3V140&180	57
H5V160 & 200	66

MODEL	A
H5V80	40.5
H5V140	48
H3V280	75.7
H5V160DPH & 200DPH	

REGULATOR FOR 9KOE TYPE



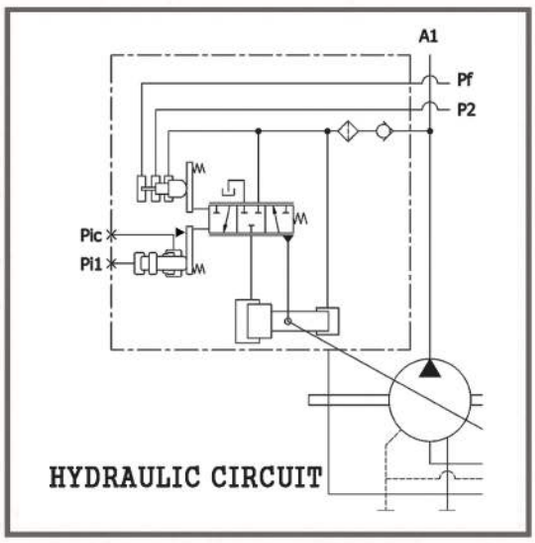

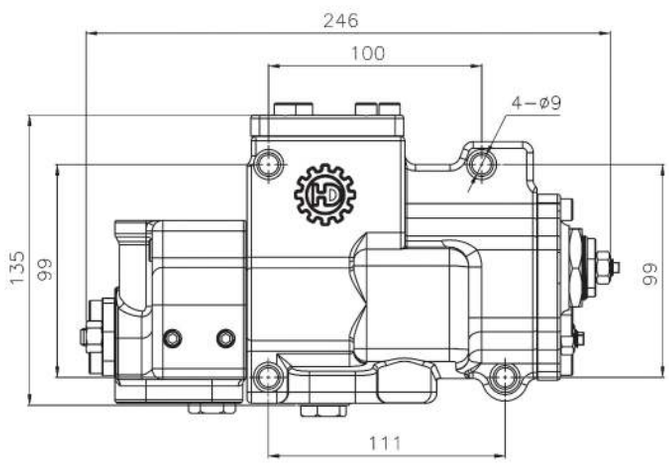

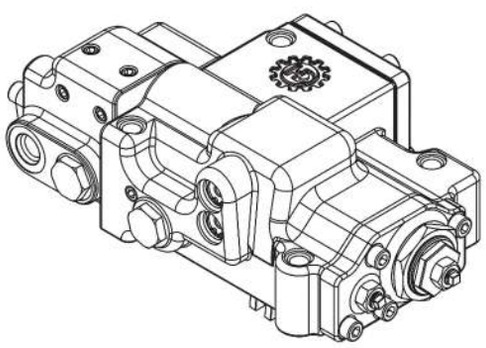

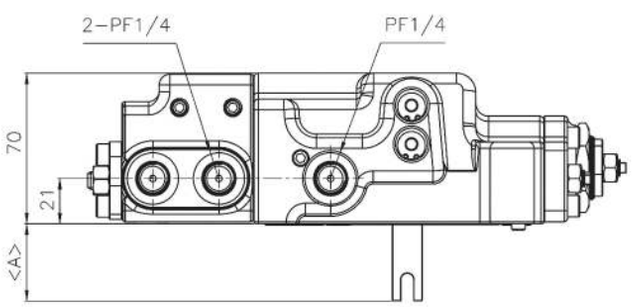

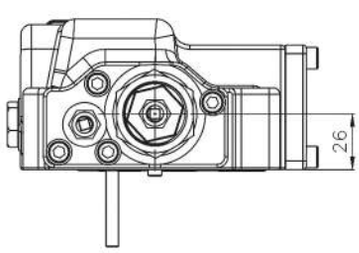

STANDARD DIMENSIONS

(mm)

MODEL	A
H3V63	22
H3V112	36
H3V140&180	57
H5V160 & 200	66

MODEL	A
H5V80	40.5
H5V140	48
H3V280	75.7
H5V160DPH & 200DPH	

REGULATOR
FOR 5L00/7L00 TYPE WITH CUT-OFF VALVE

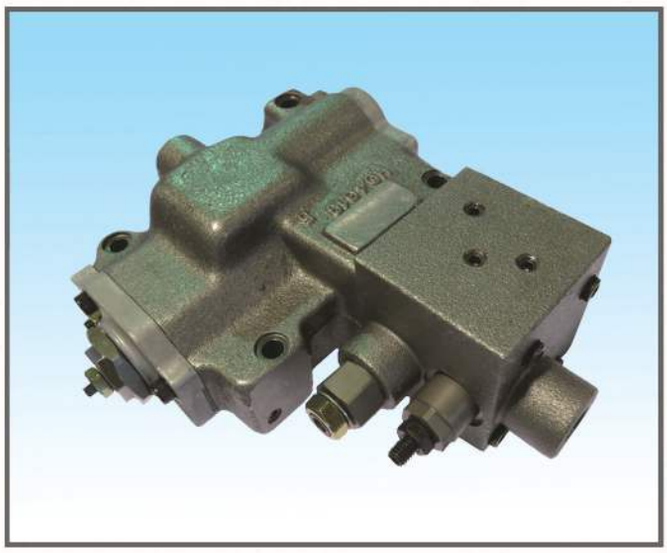

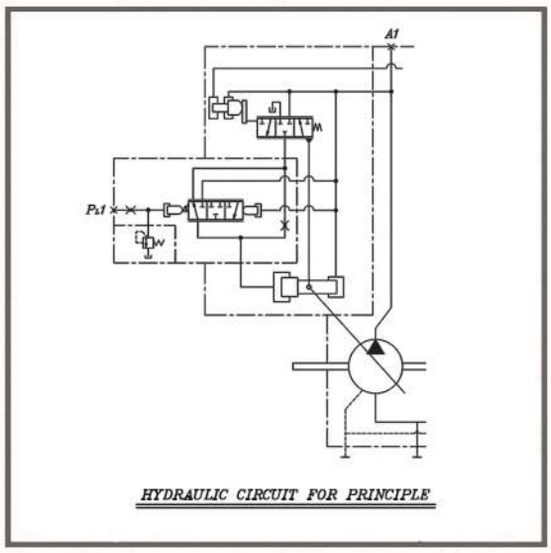

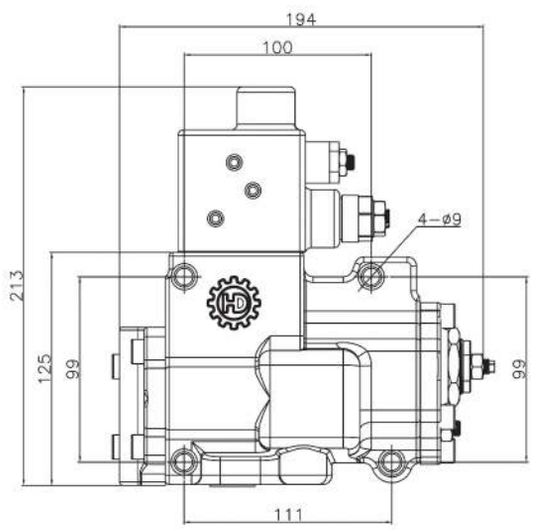

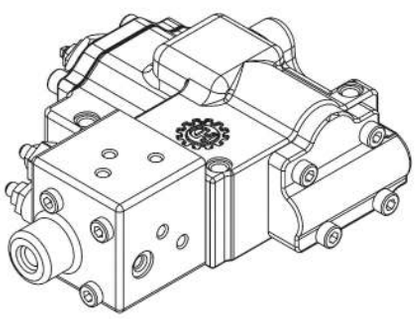

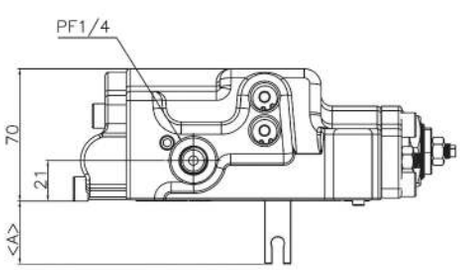

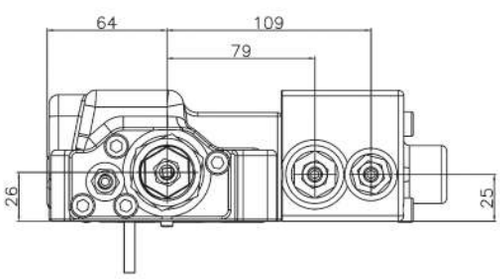

STANDARD DIMENSIONS

(mm)

MODEL	A
H3V63	22
H3V112	36
H3V140&180	57
H5V160 & 200	66

MODEL	A
H5V80	40.5
H5V140	48
H3V280	75.7
H5V160DPH & 200DPH	

REGULATOR
FOR 3L02 TYPE WITHOUT CUT-OFF VALVE

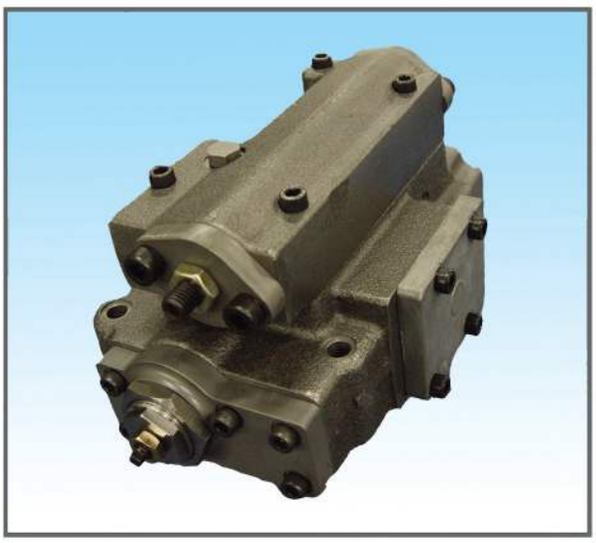

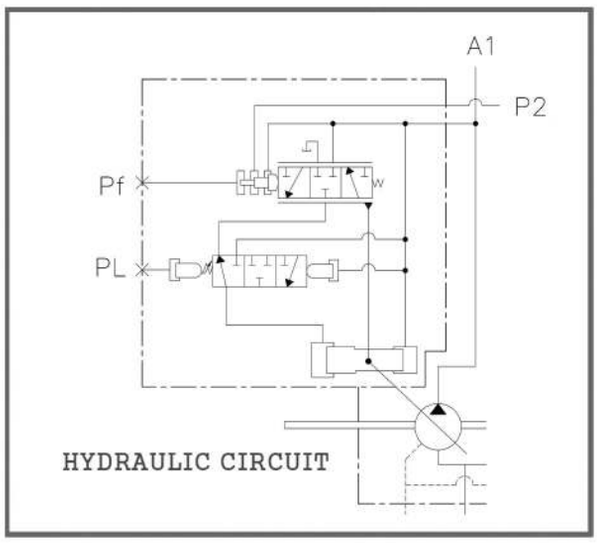

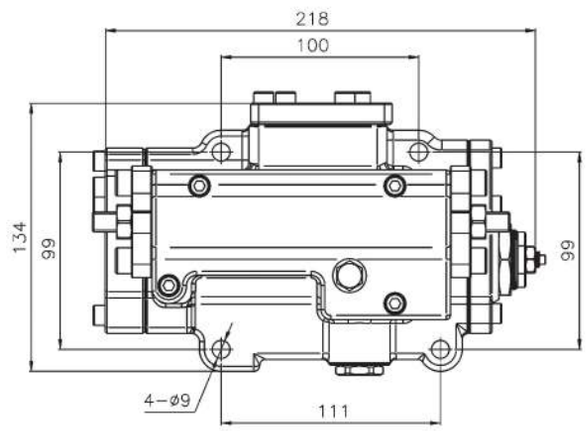

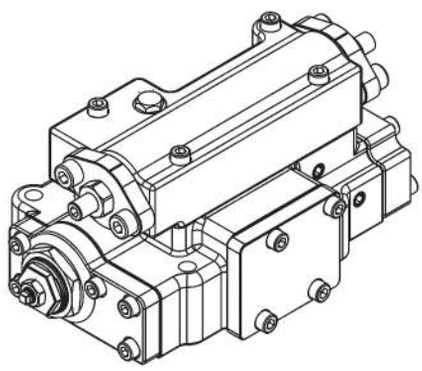

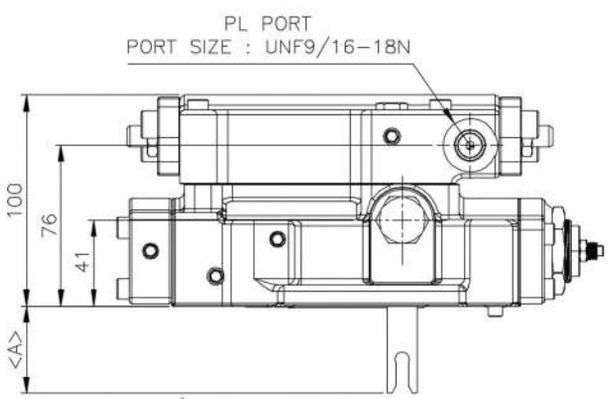

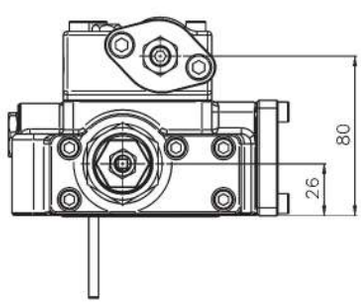

STANDARD DIMENSIONS

(mm)

MODEL	A
H3V63	25.5
H3V112	39.5
H3V140&180	60.5
H5V160 & 200	69.5

MODEL	A
H5V80	44
H5V140	51
H3V280	79.2
H5V160DPH & 200DPH	

REGULATOR
FOR 3L09 TYPE WITH CUT-OFF VALVE



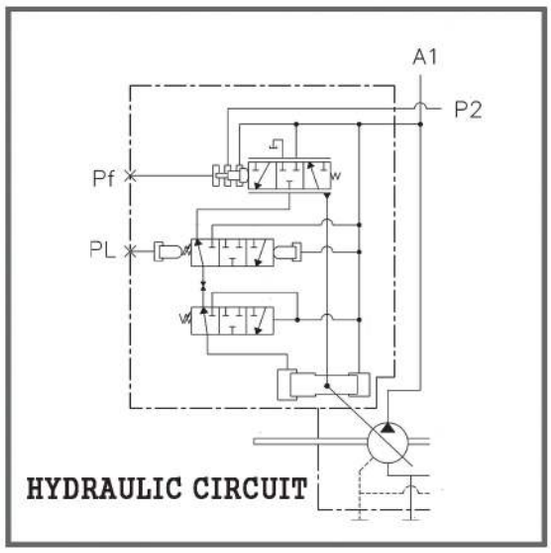

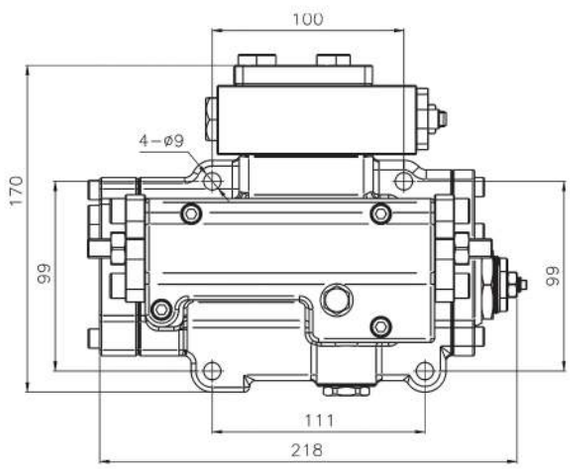

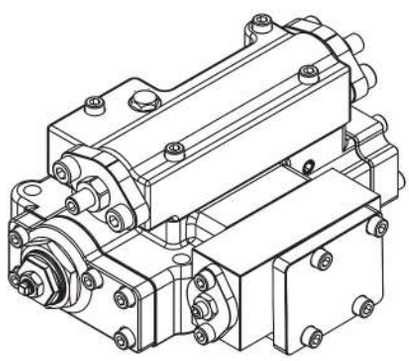

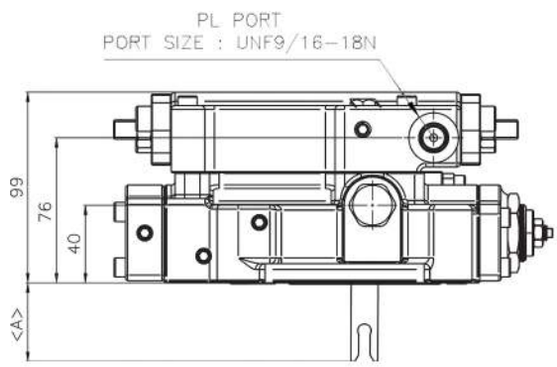

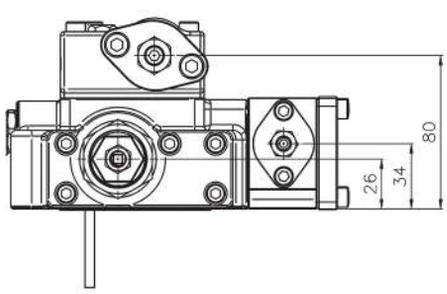

STANDARD DIMENSIONS

(mm)

MODEL	A
H3V63	25.5
H3V112	39.5
H3V140&180	60.5
H5V160 & 200	69.5

MODEL	A
H5V80	44
H5V140	51
H3V280	79.2
H5V160DPH & 200DPH	

REGULATOR FOR CATERPILLAR (3L2E)

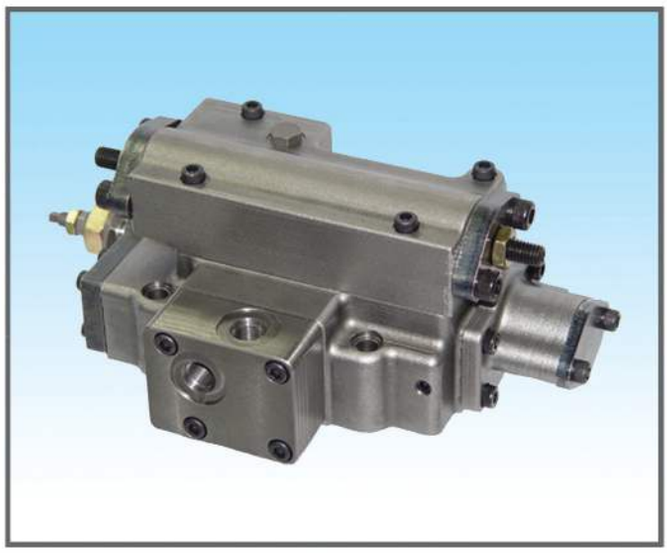

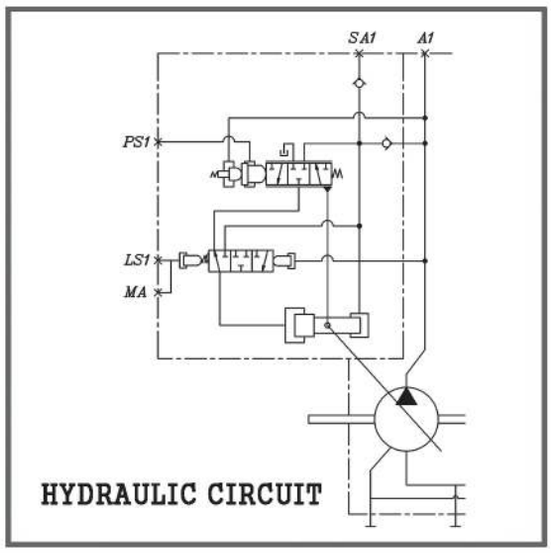

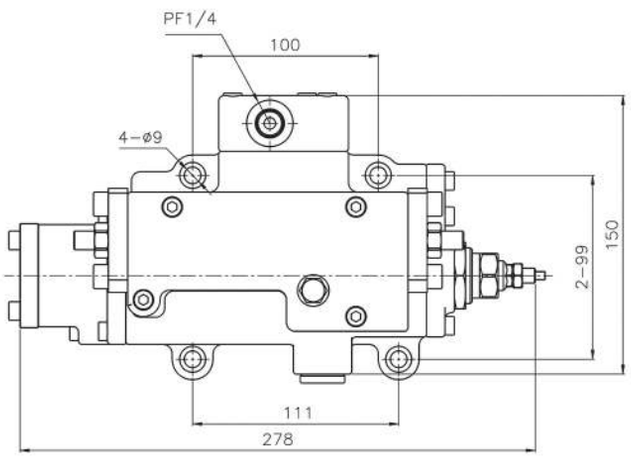

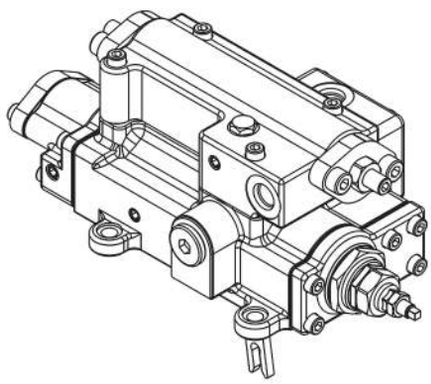

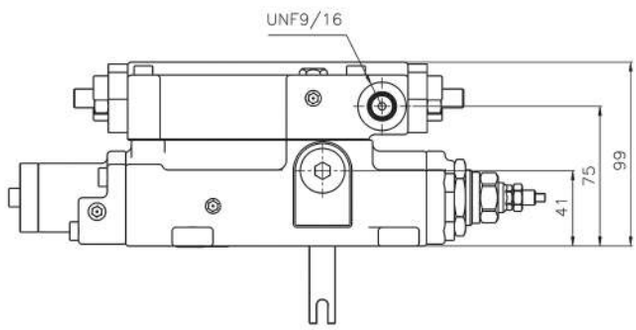

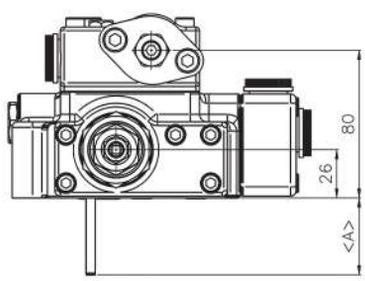

STANDARD DIMENSIONS

(mm)

MODEL	A
H3V63	25.5
H3V112	39.5
H3V140&180	60.5
H5V160 & 200	69.5

MODEL	A
H5V80	44
H5V140	51
H3V280	79.2
H5V160DPH & 200DPH	

REGULATOR FOR 3E00 TYPE

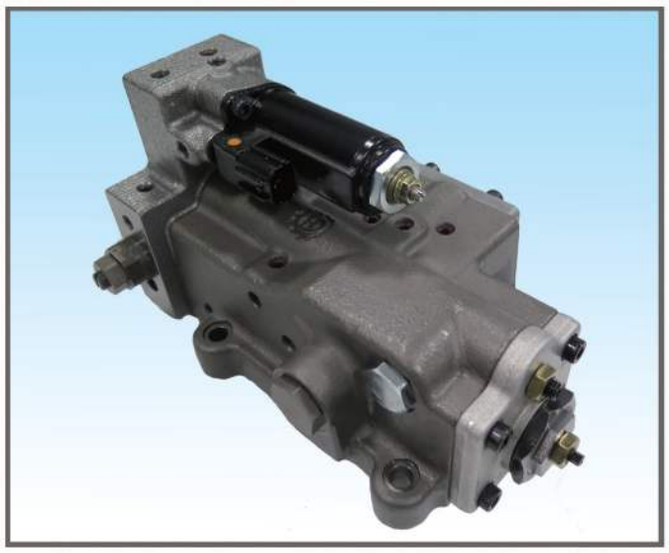

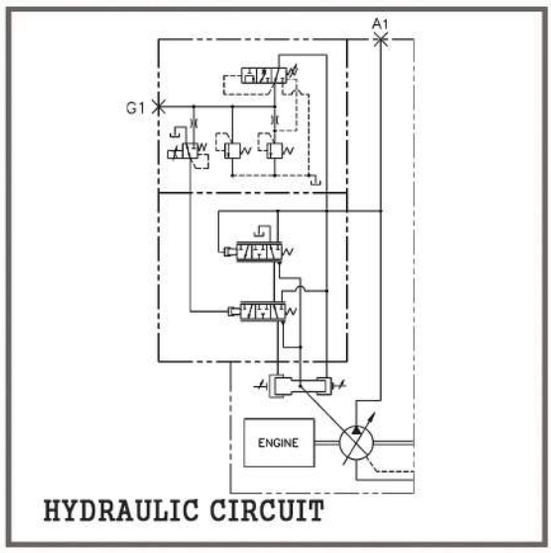

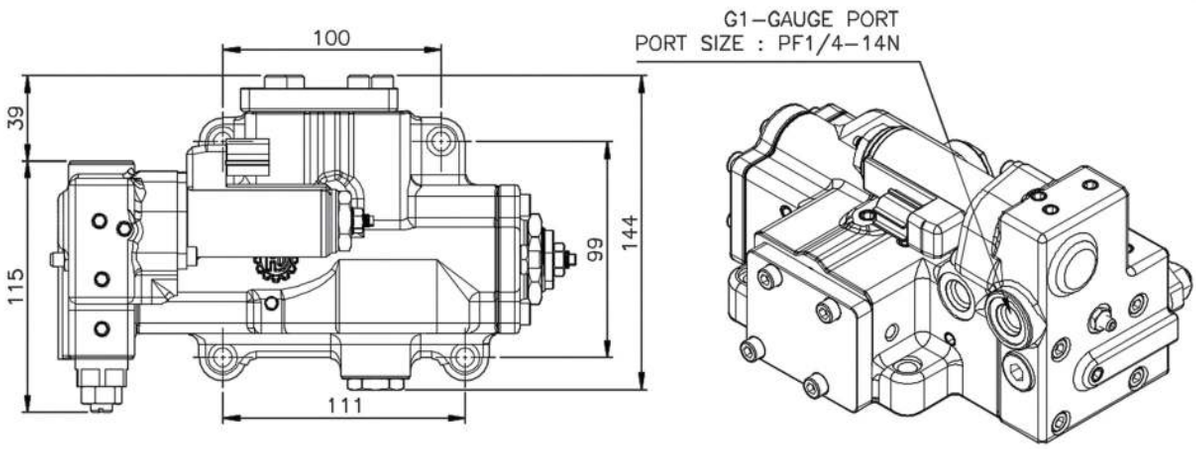

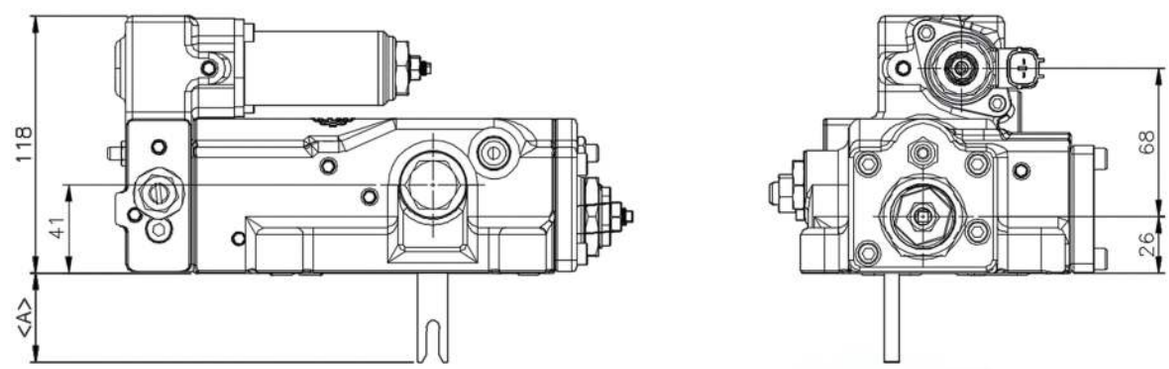

STANDARD DIMENSIONS

(mm)

MODEL	A
H3V63	22
H3V112	36
H3V140&180	57
H5V160 & 200	66

MODEL	A
H5V80	40.5
H5V140	48
H3V280	75.7
H5V160DPH & 200DPH	

REGULATOR FOR 5E29 TYPE

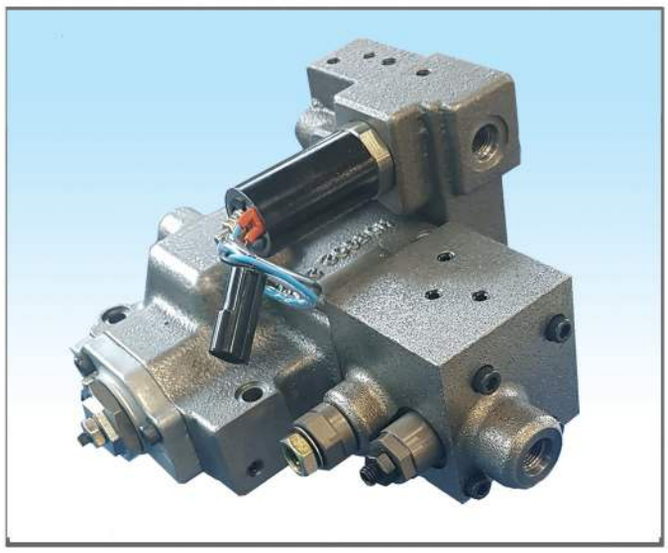

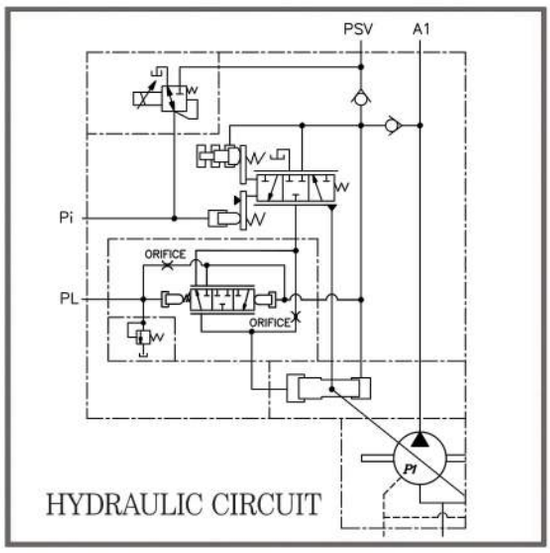

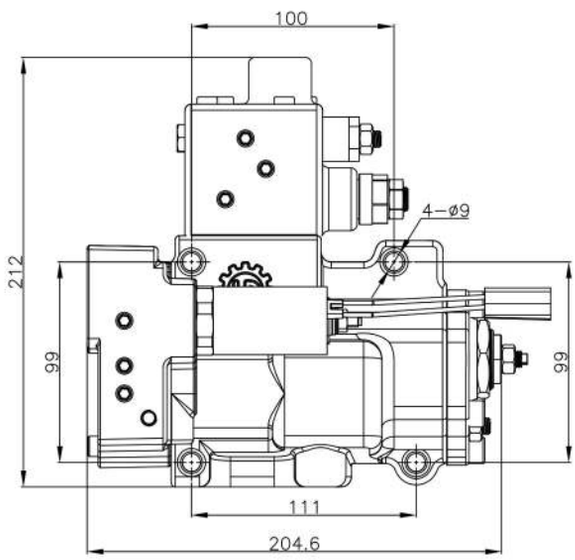

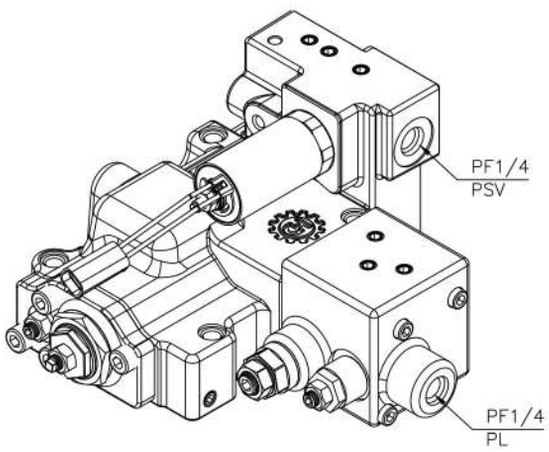

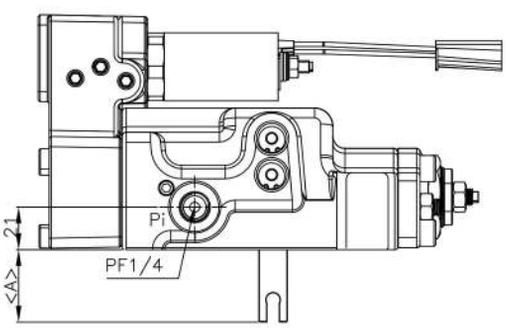

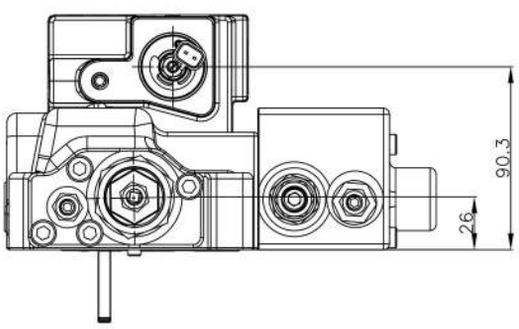

STANDARD DIMENSIONS

(mm)

MODEL	A
H3V63	22
H3V112	36
H3V140&180	57
H5V160 & 200	66

MODEL	A
H5V80	40.5
H5V140	48
H3V280	75.7
H5V160DPH & 200DPH	

REGULATOR FOR 9S09 TYPE

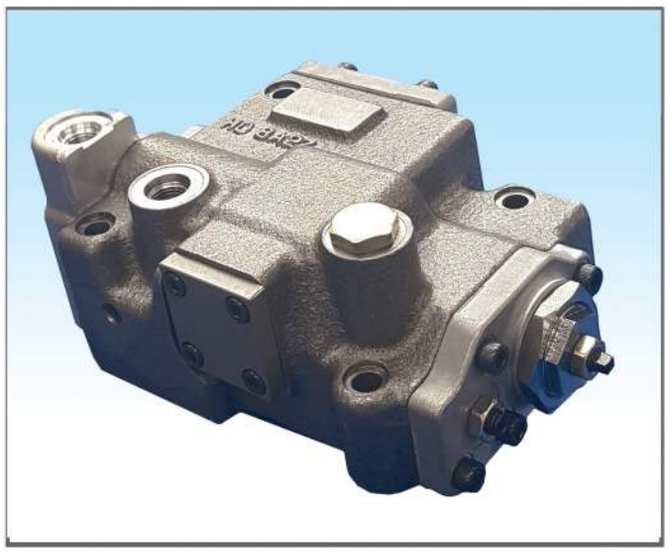

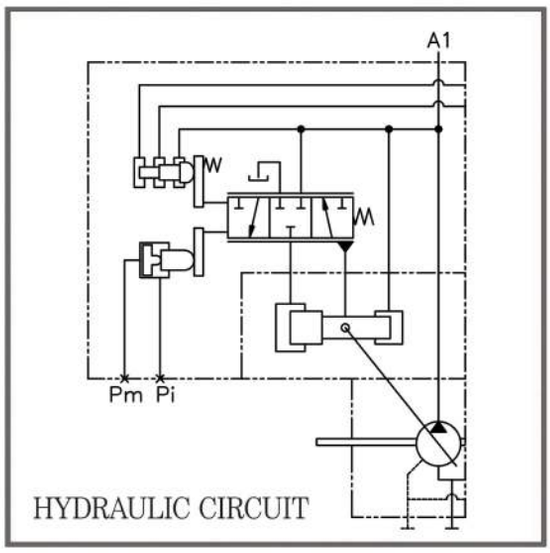

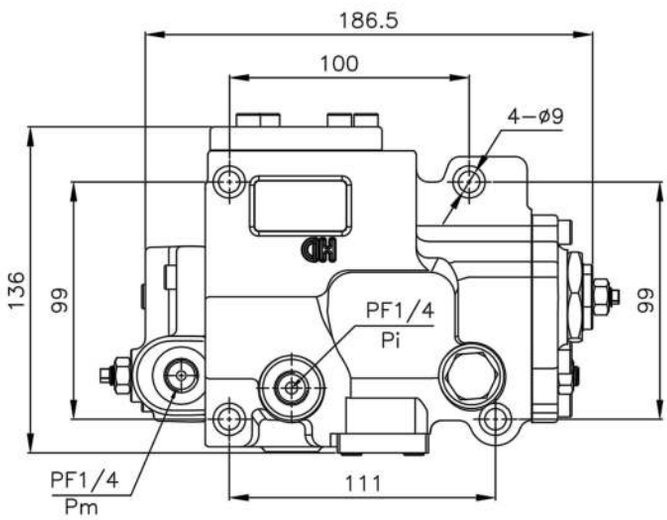

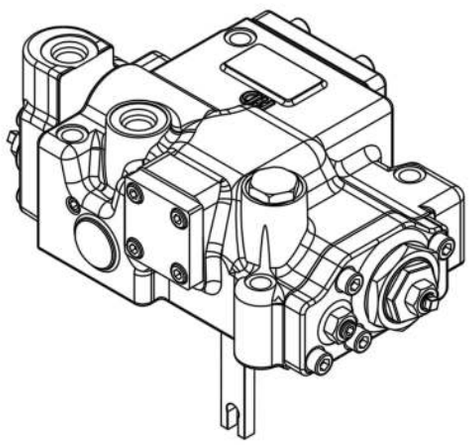

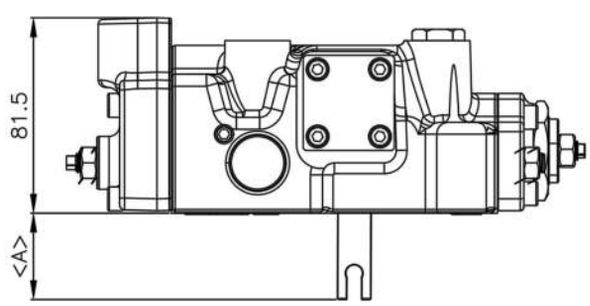

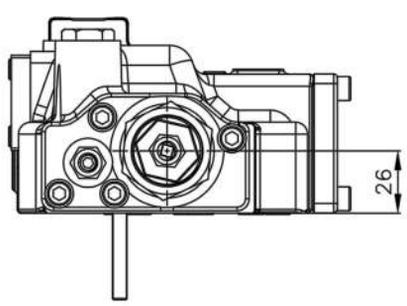

STANDARD DIMENSIONS

(mm)

MODEL	A
H3V63	22
H3V112	36
H3V140&180	57
H5V160 & 200	66

MODEL	A
H5V80	40.5
H5V140	48
H3V280	75.7
H5V160DPH & 200DPH	

REGULATOR FOR H7V SERIES(9N00) TYPE

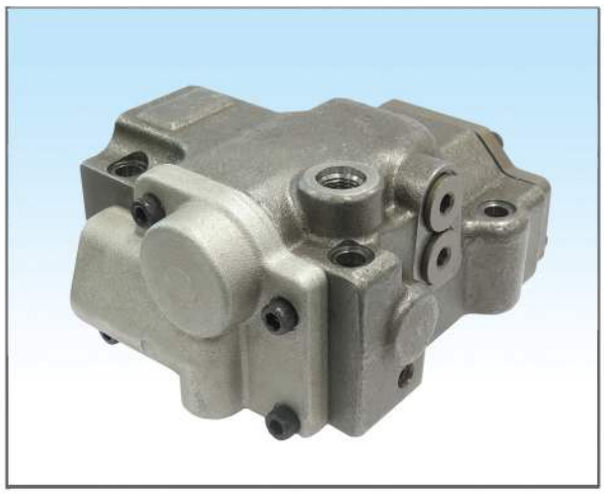

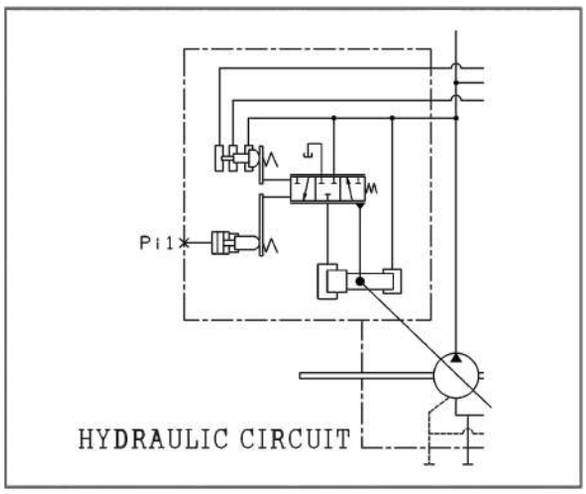

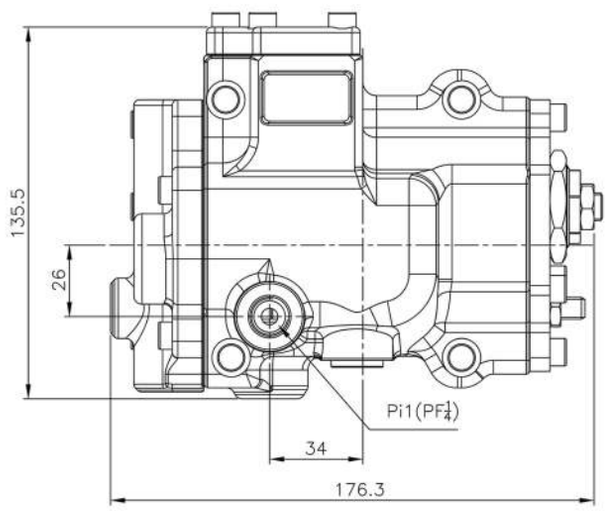

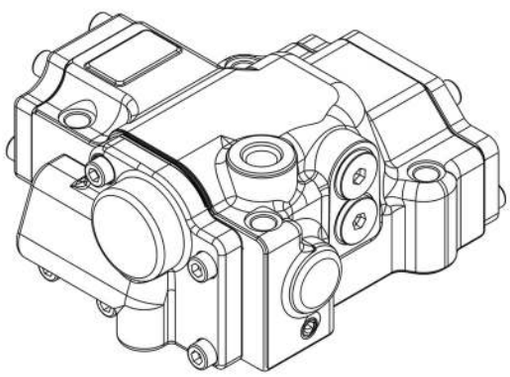

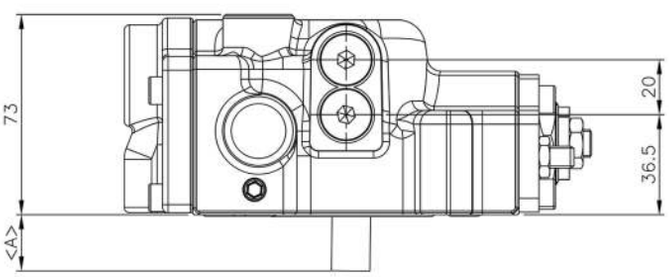

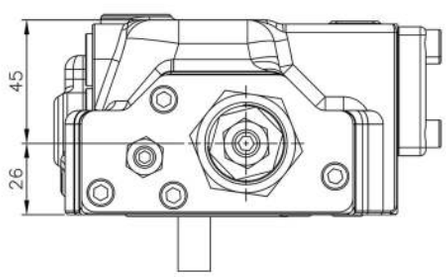

STANDARD DIMENSIONS (mm)

MODEL	A
H7V63	20.5
H7V100	30.5

REGULATOR
FOR H7V SERIES(9NOE) TYPE WITH EPR



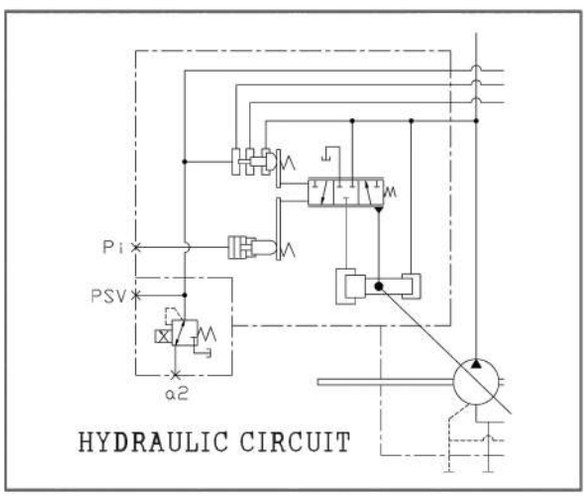

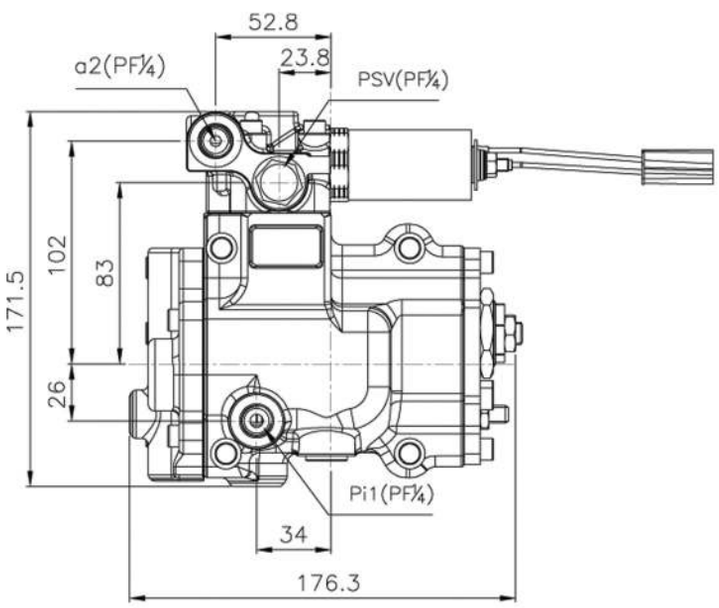

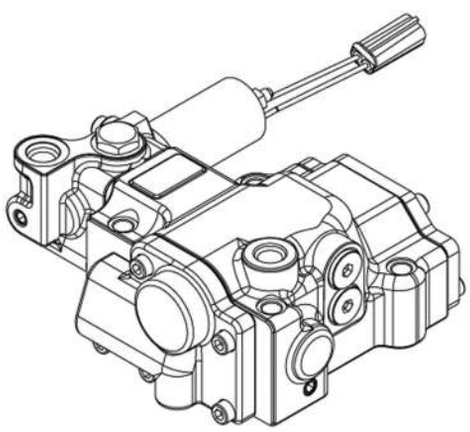

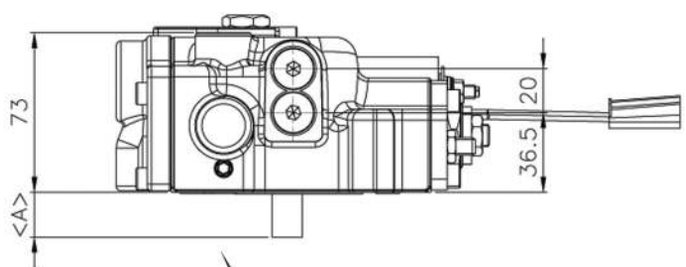

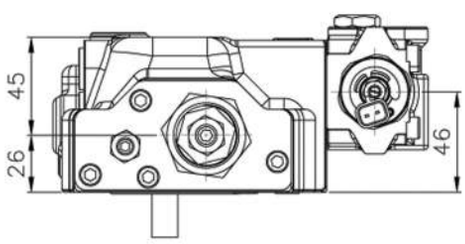

STANDARD DIMENSIONS (mm)

MODEL	A
H7V63	20.5
H7V100	30.5

REGULATOR FOR H7V SERIES(9C00) TYPE



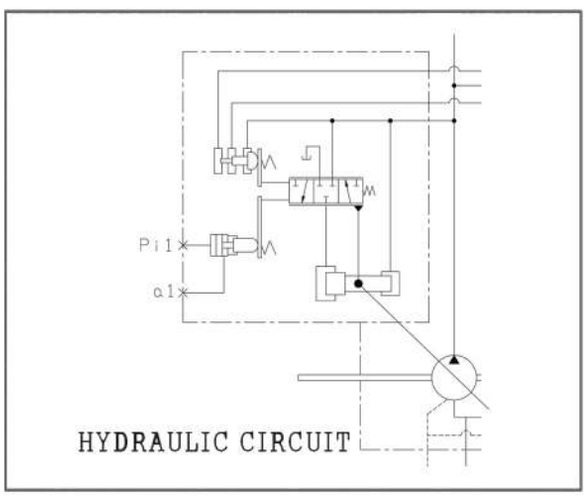

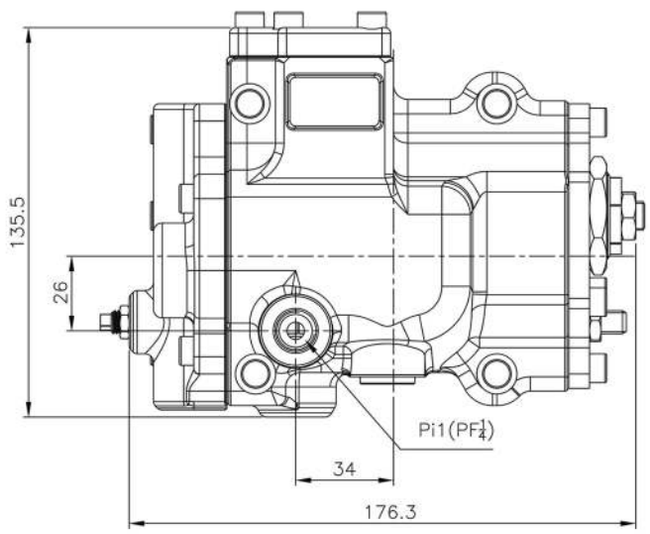

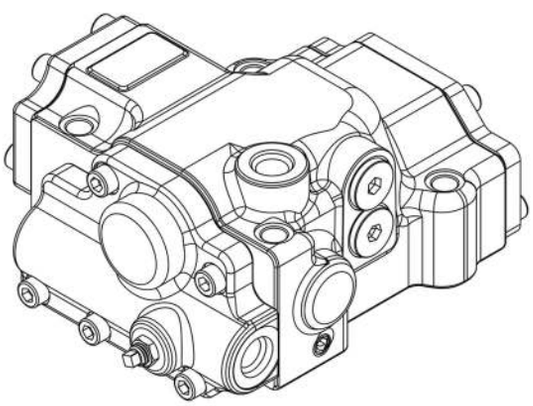

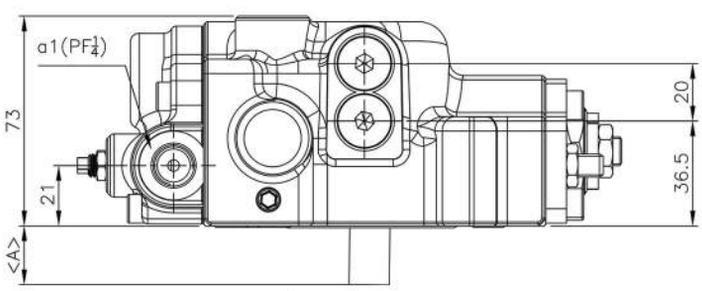

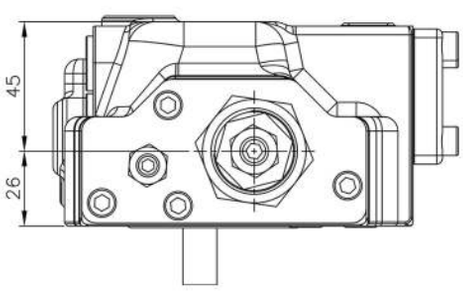

STANDARD DIMENSIONS (mm)

MODEL	A
H7V63	20.5
H7V100	30.5

REGULATOR
FOR H7V SERIES(9C00) TYPE WITH EPR



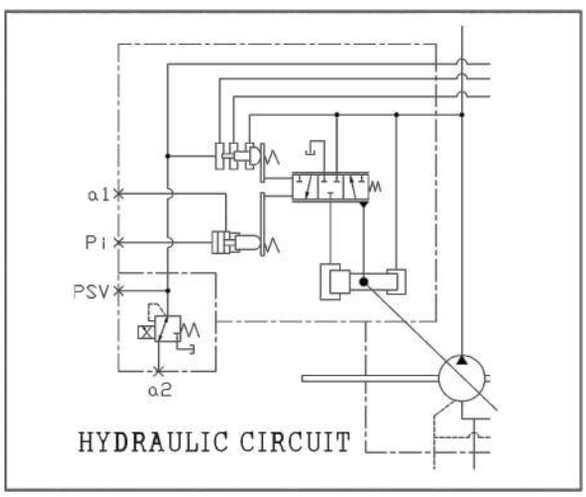

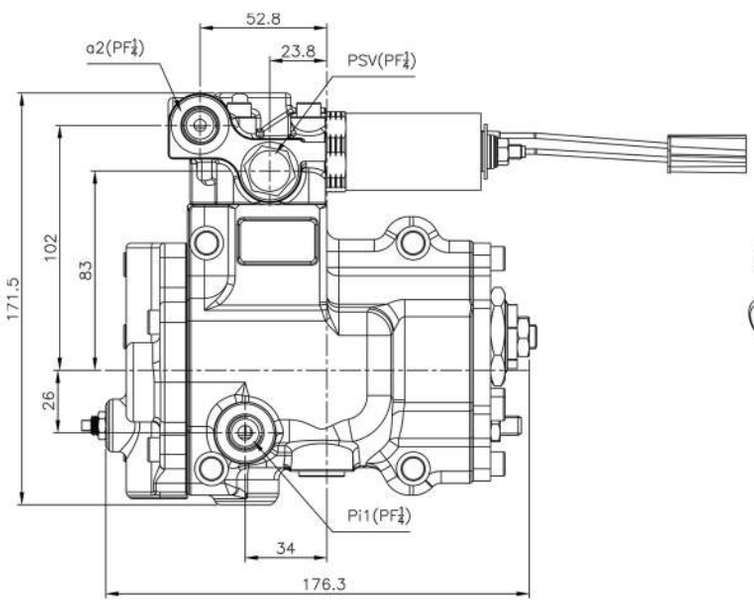

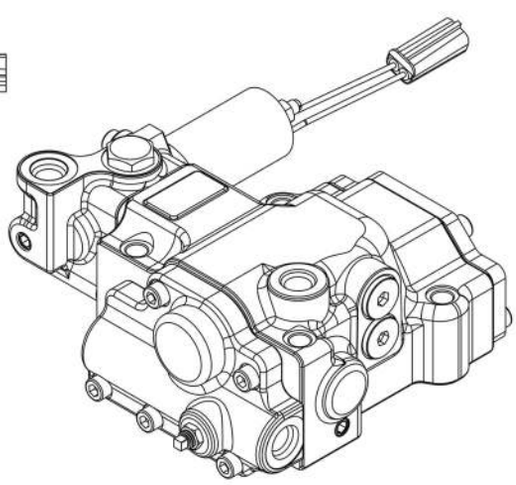

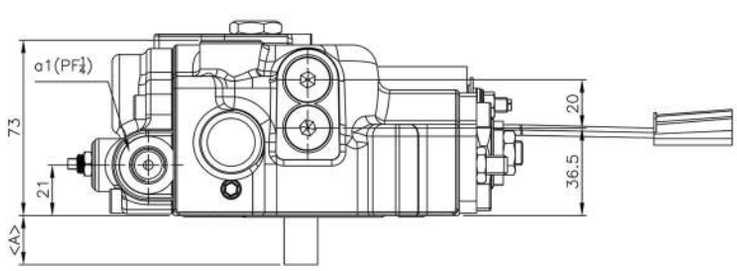

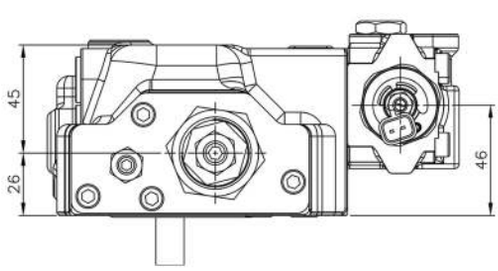

STANDARD DIMENSIONS (mm)

MODEL	A
H7V63	20.5
H7V100	30.5

REGULATOR FOR H7V SERIES(9T00) TYPE

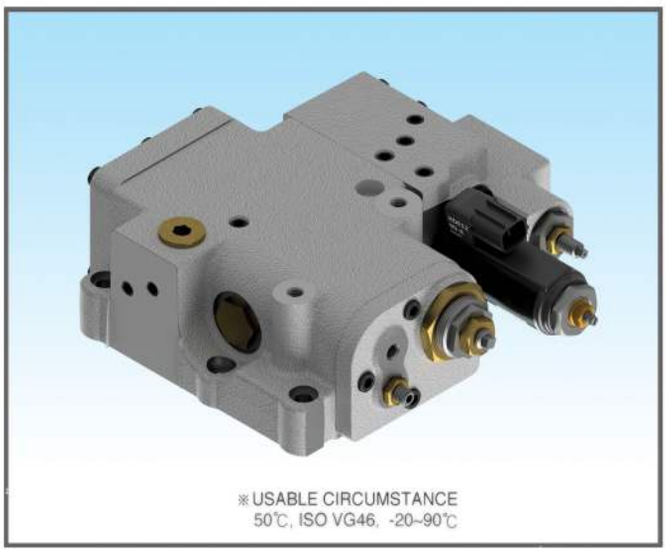

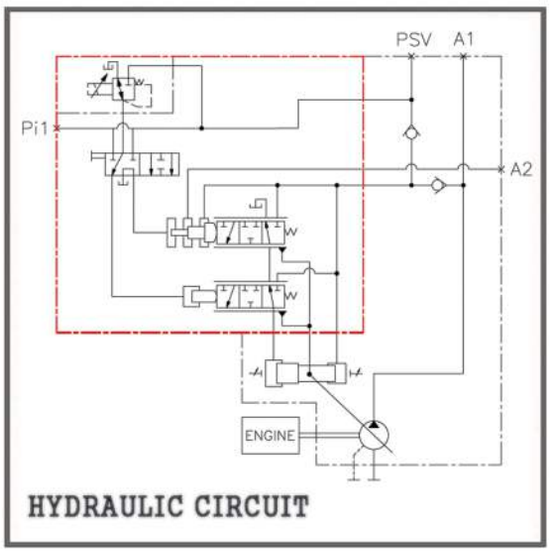

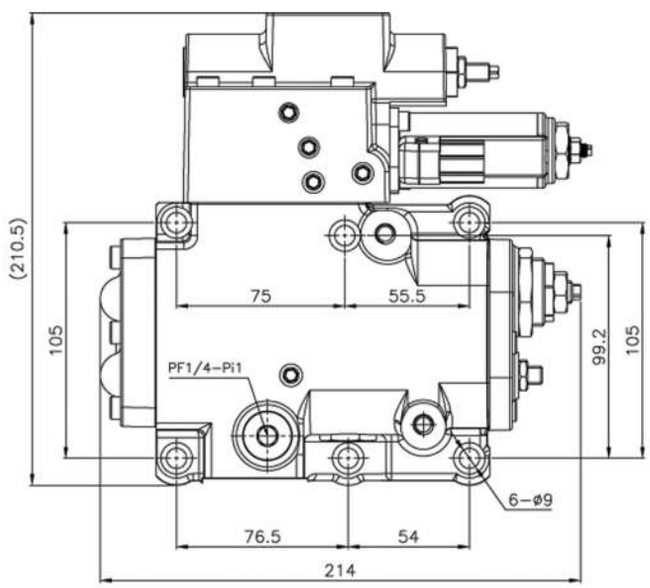

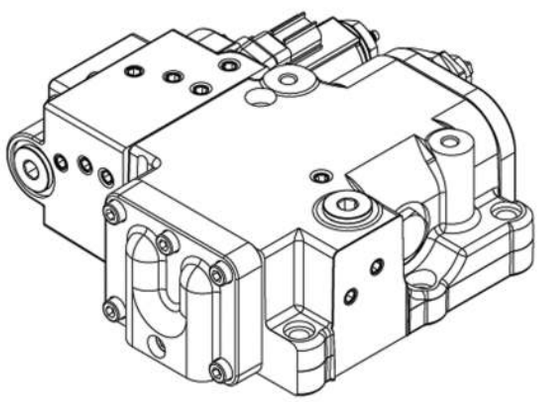

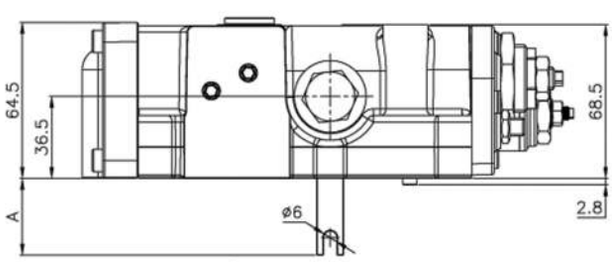

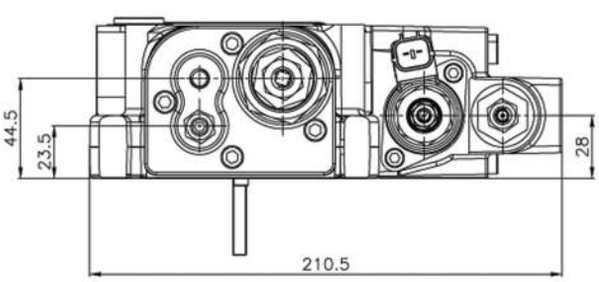

STANDARD DIMENSIONS

(mm)

MODEL	A
H7V125 & 140 & 180	34.2
H7V280	48.2

REGULATOR FOR H7V SERIES(OE00) TYPE

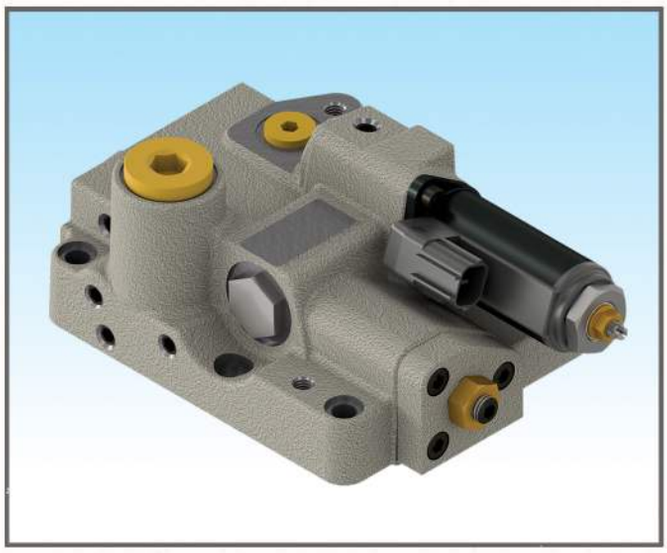

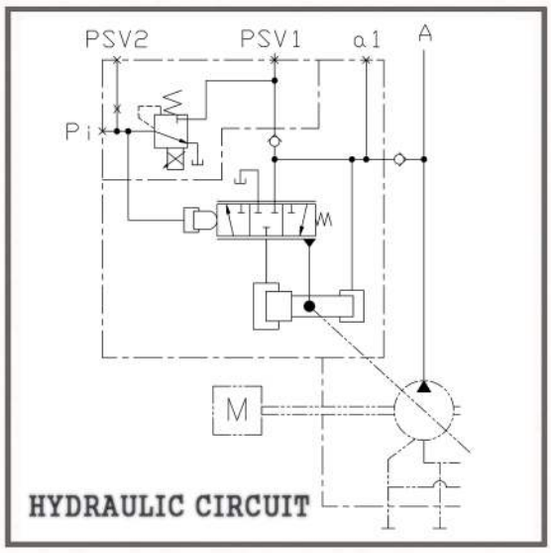

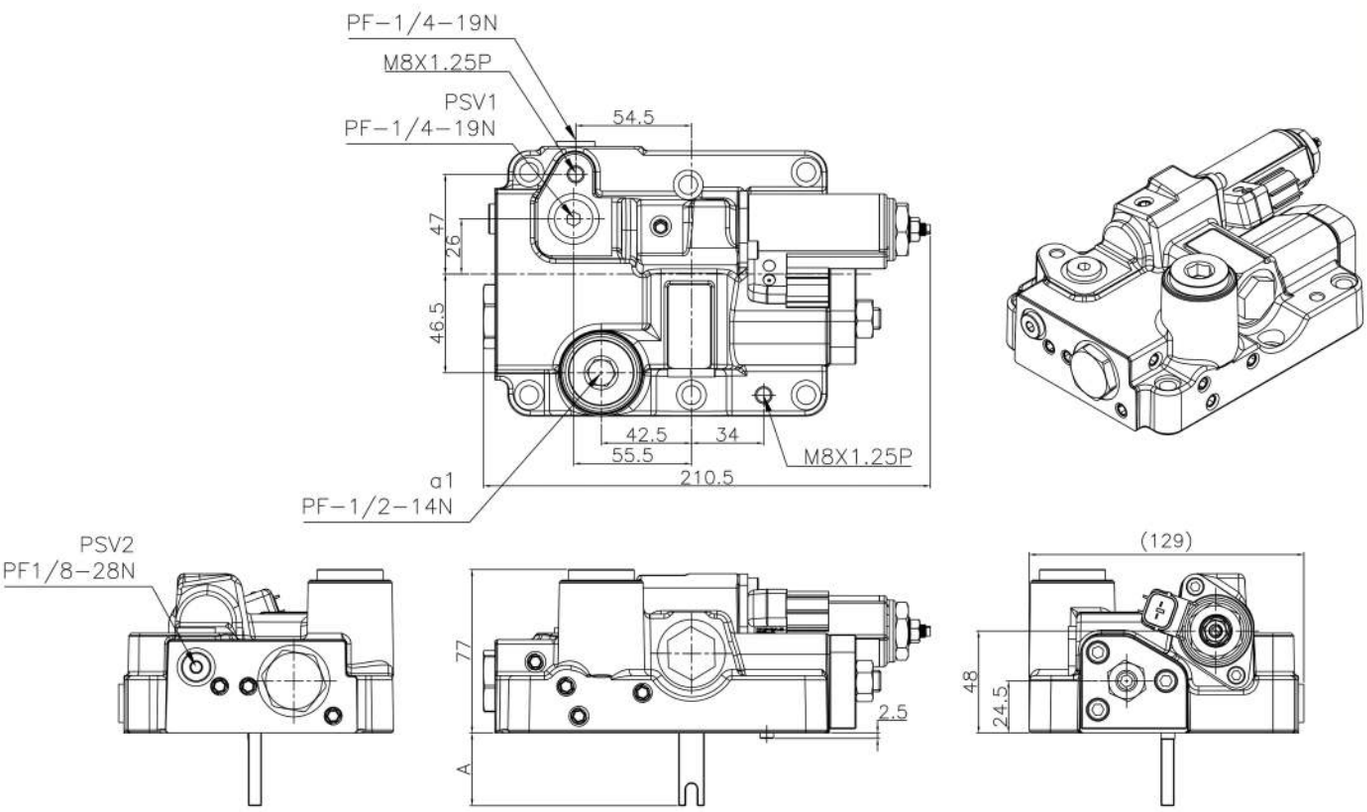

STANDARD DIMENSIONS

(mm)

MODEL	A
H7V125 & 140 & 180	34.2
H7V280	48.2

REGULATOR FOR H7V SERIES(OE43) TYPE

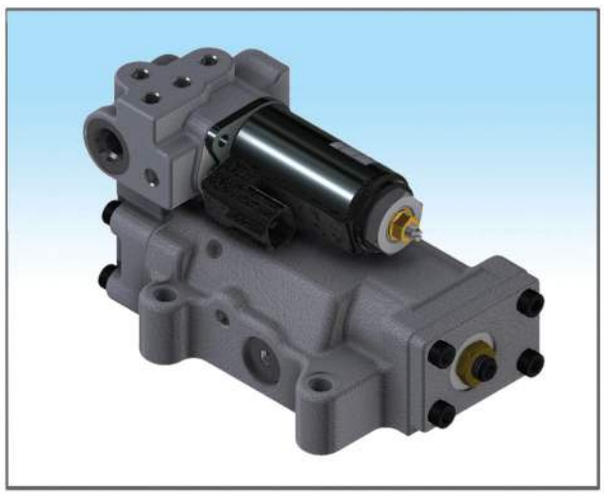

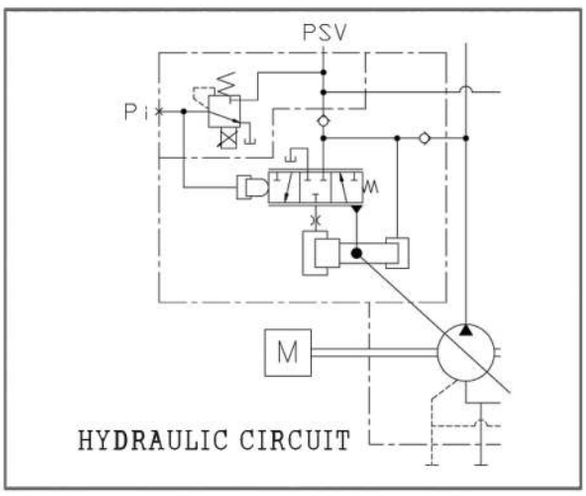

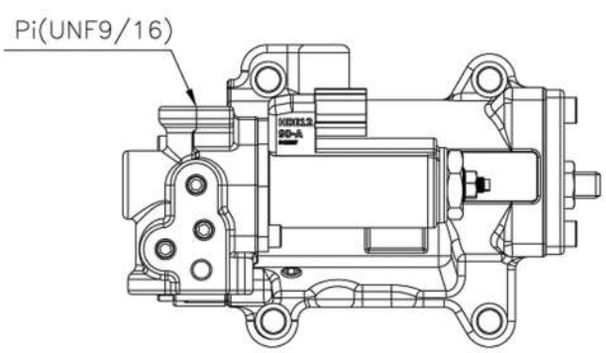

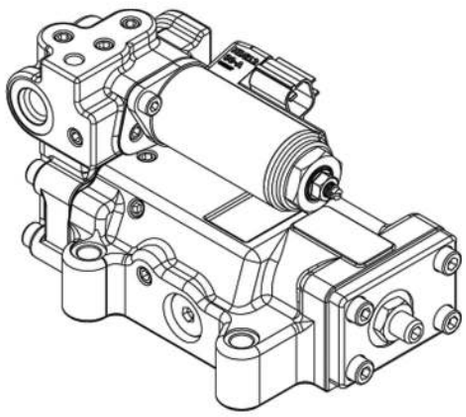

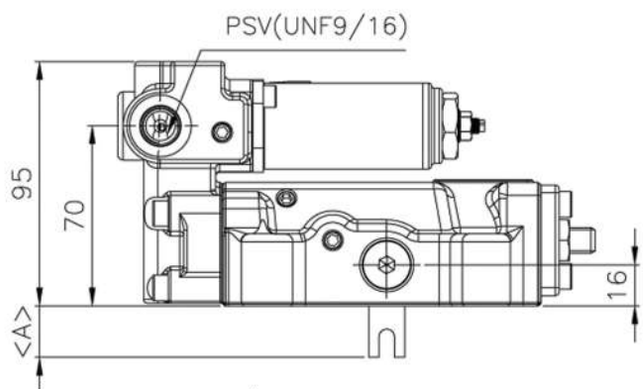

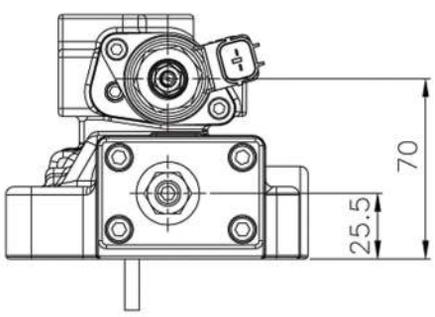

STANDARD DIMENSIONS (mm)

MODEL	A
H7V63	20.5
H7V100	30.5

REGULATOR FOR H7V SERIES(9Y2C-F) TYPE

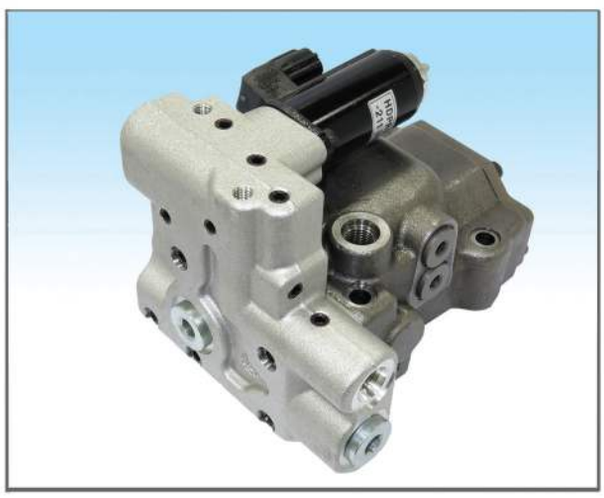

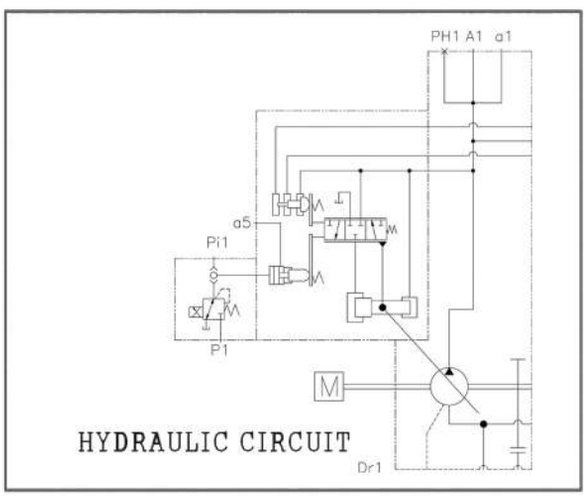

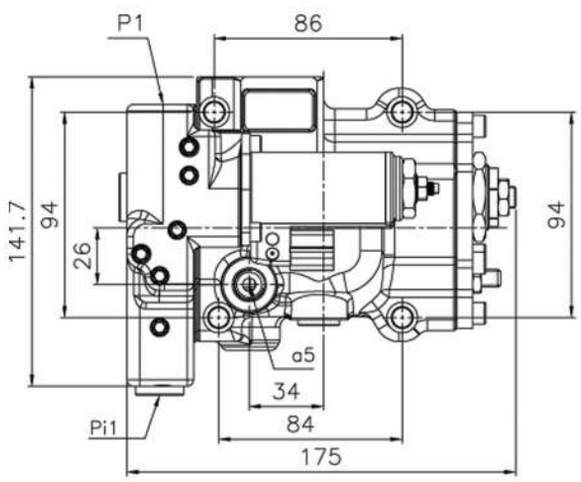

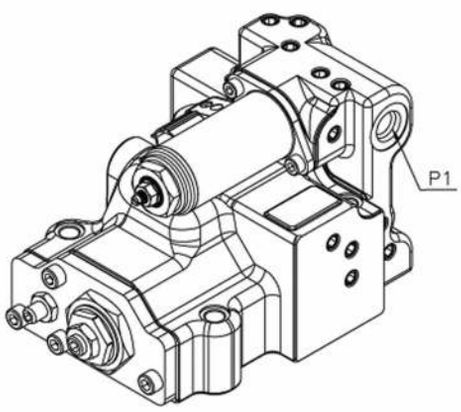

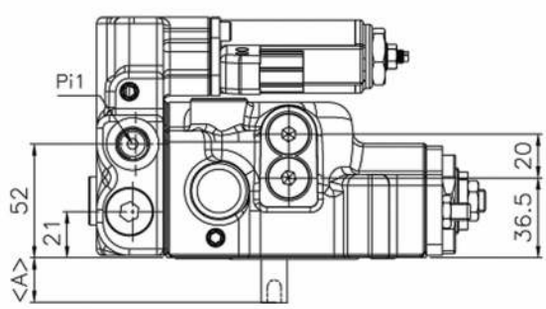

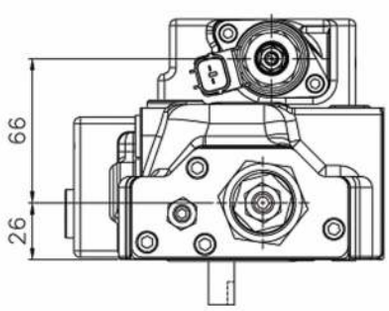

STANDARD DIMENSIONS (mm)

MODEL	A
H7V63	20.5
H7V100	30.5

REGULATOR FOR H7V SERIES(9X2D-R) TYPE

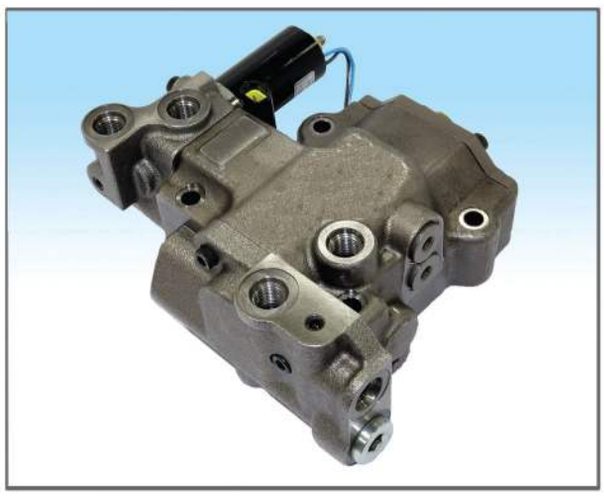

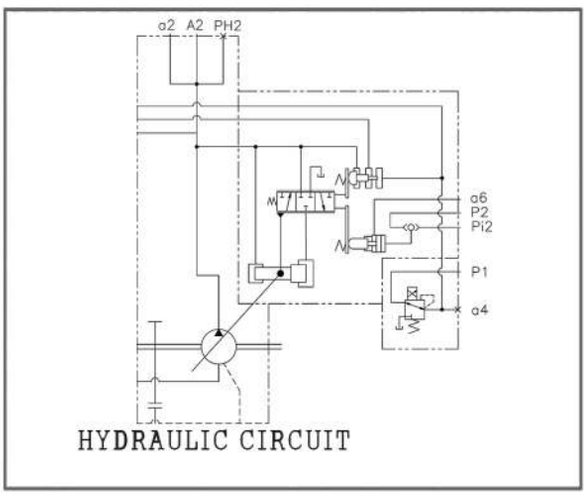

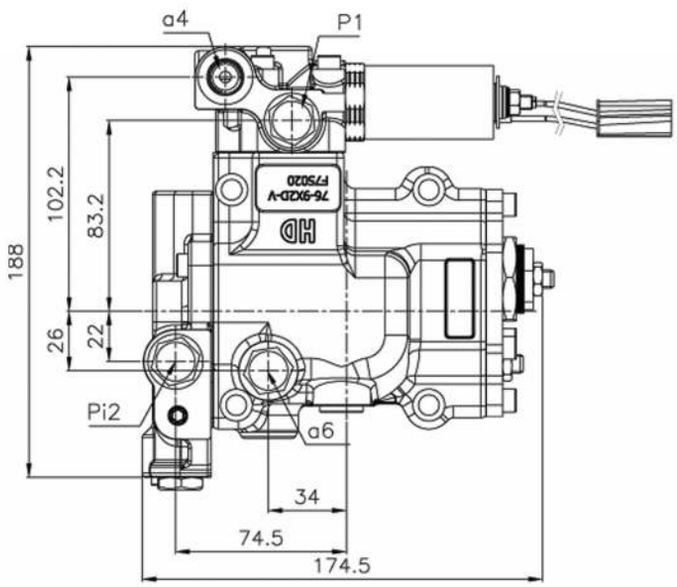

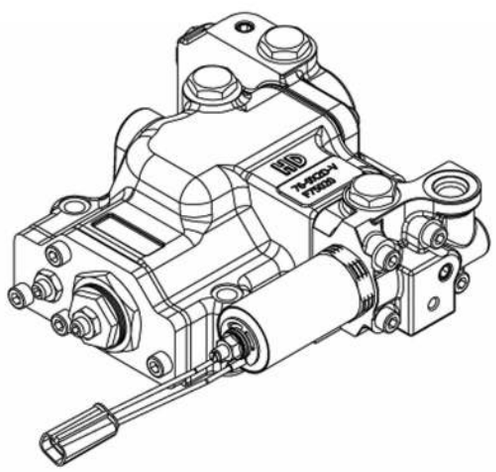

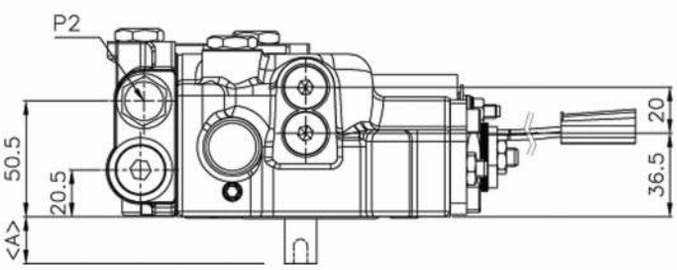

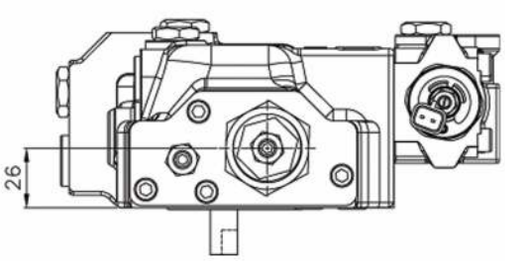

STANDARD DIMENSIONS (mm)

MODEL	A
H7V63	20.5
H7V100	30.5

REGULATOR FOR H3B530/800AP (WITH EPR)

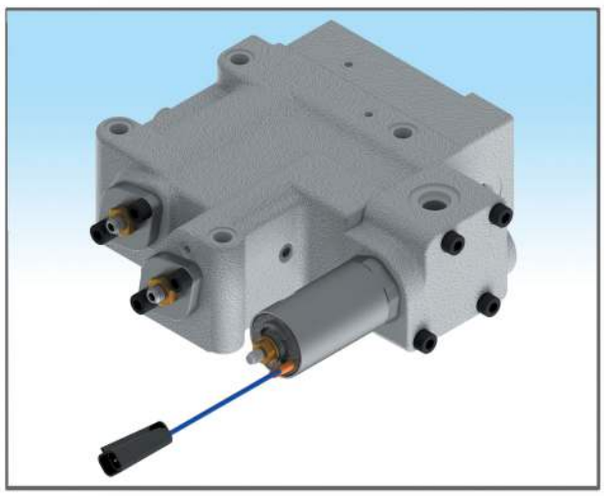

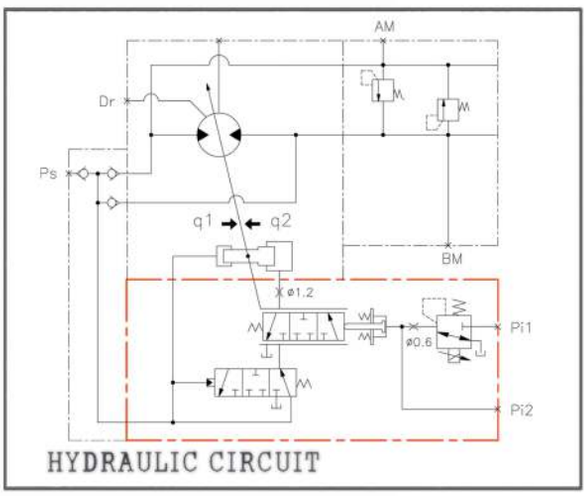

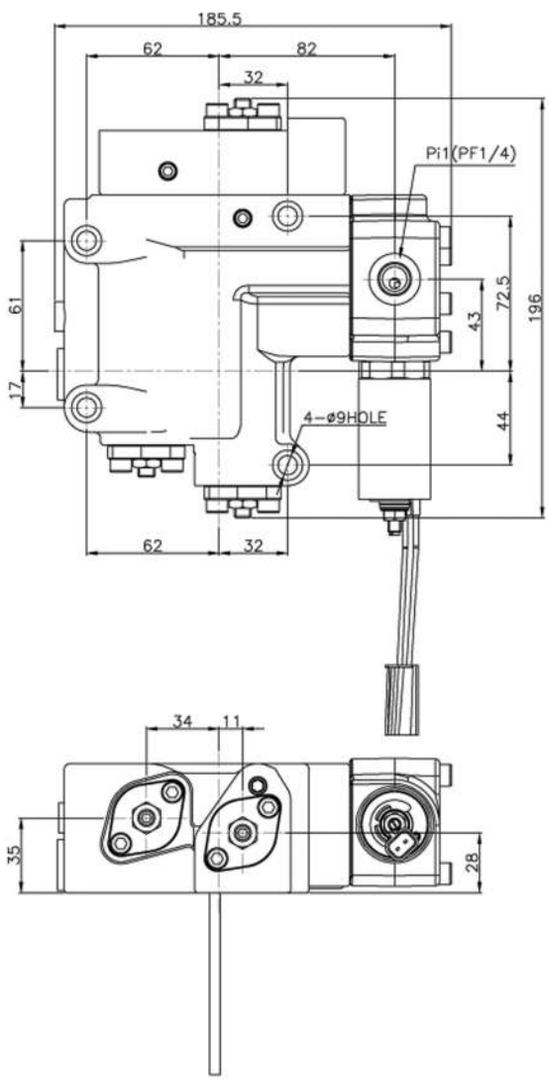

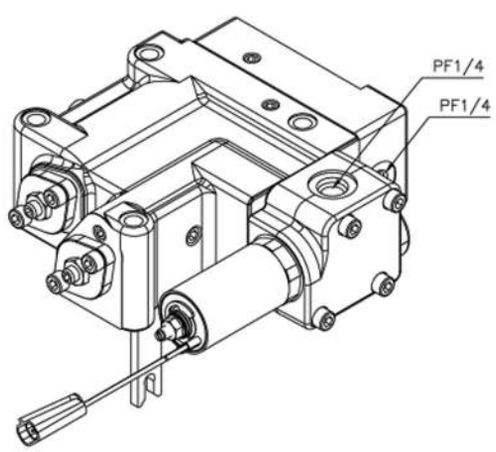

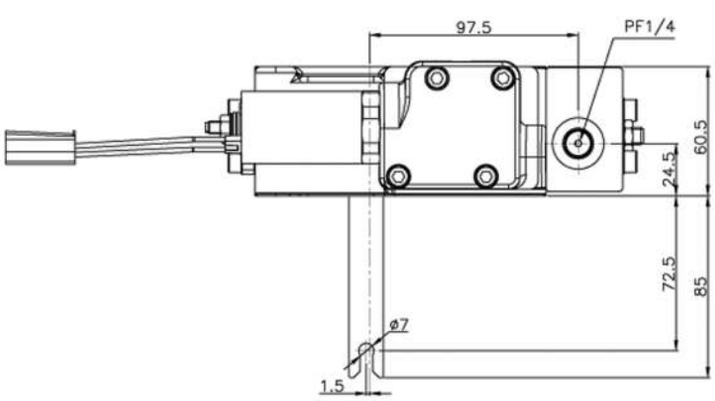

REGULATOR FOR H3B530/800AP (WITHOUT EPR)

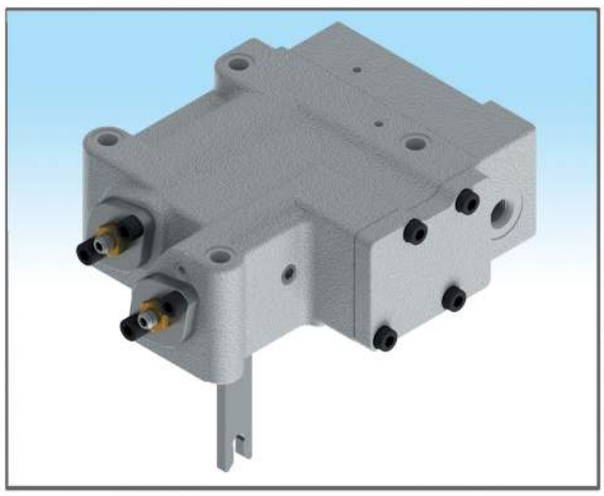

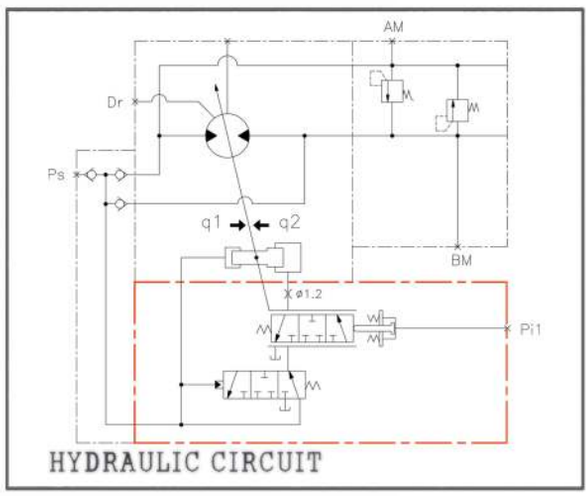

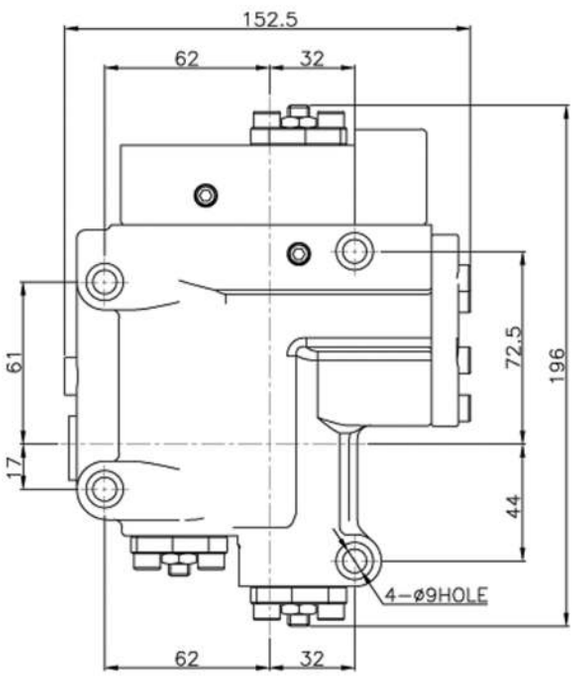

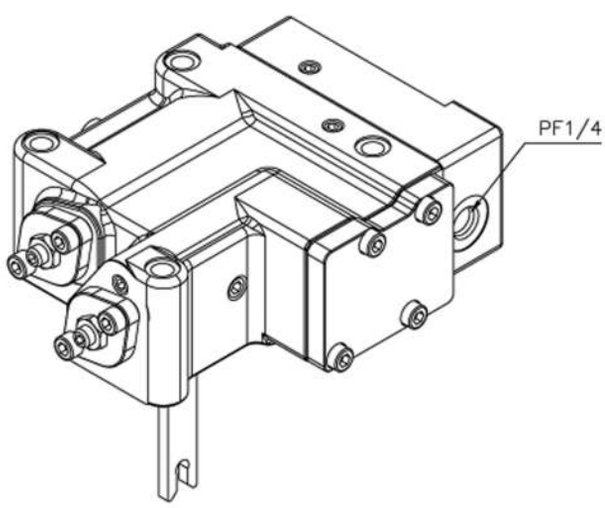

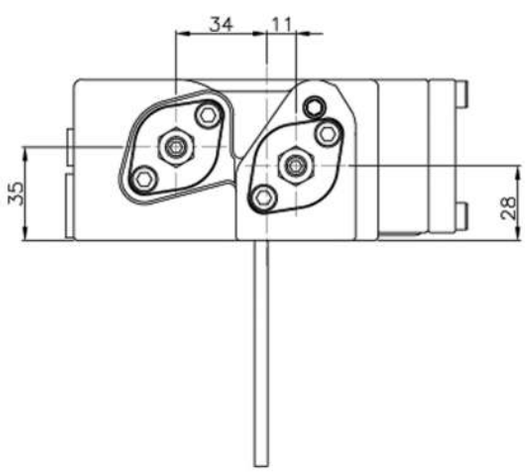

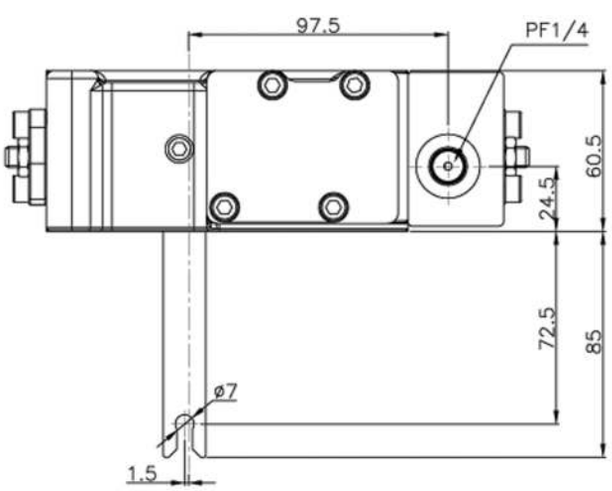

REGULATOR FOR H11VLO190&260LRDU TYPE

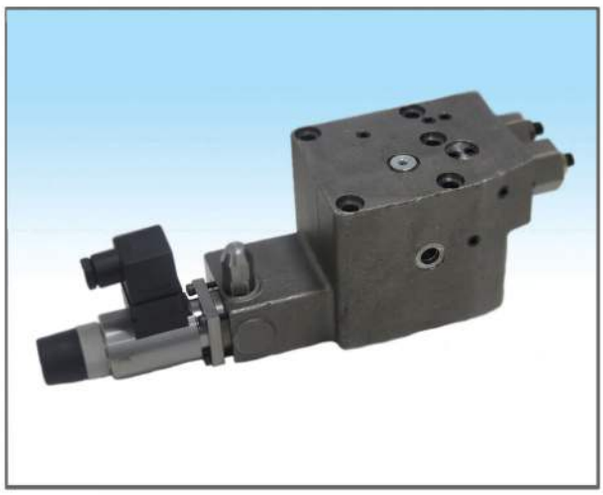

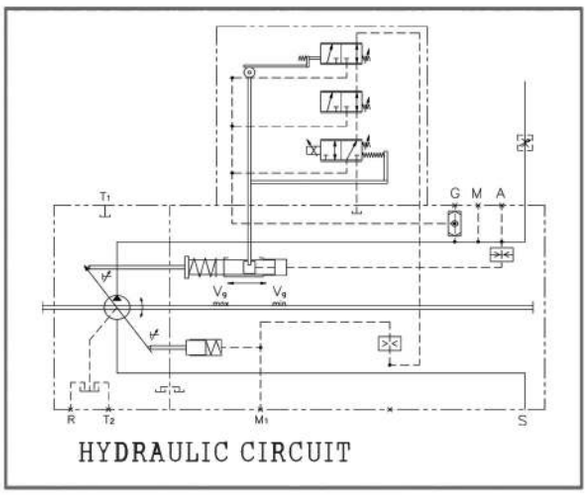

HYDRAULIC CIRCUIT

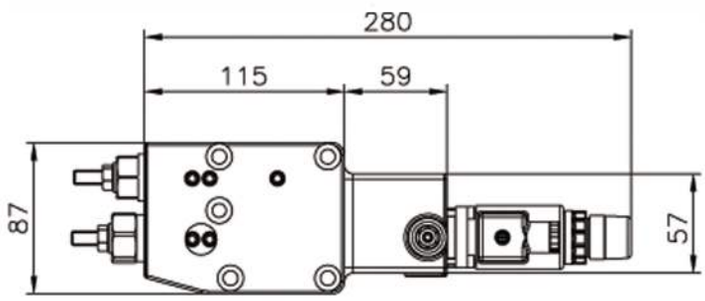

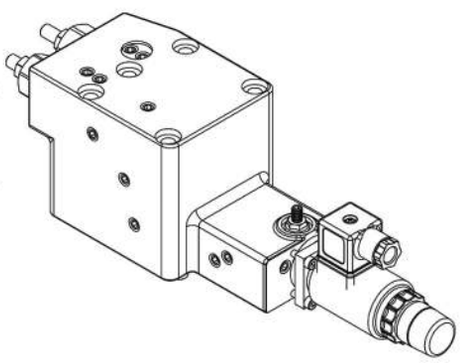

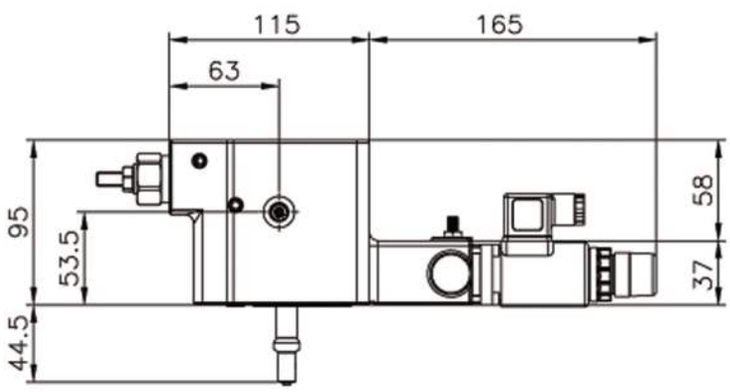

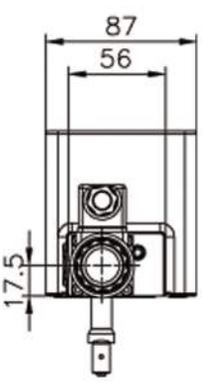

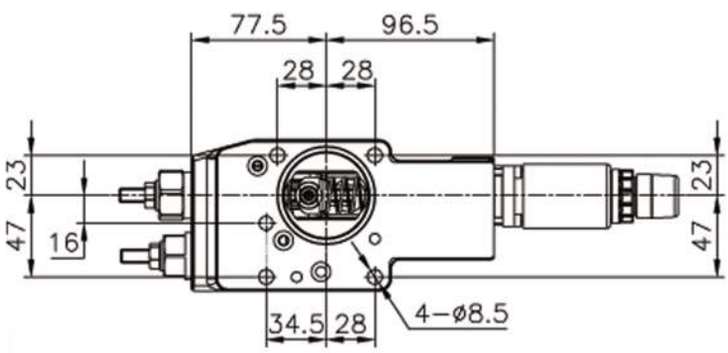

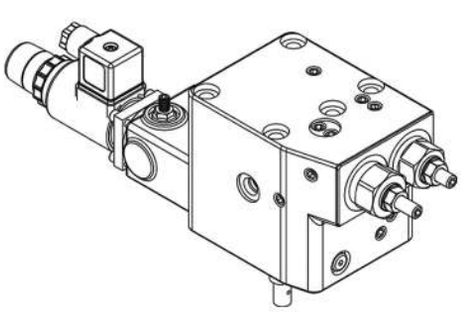

REGULATOR FOR KOMATSU

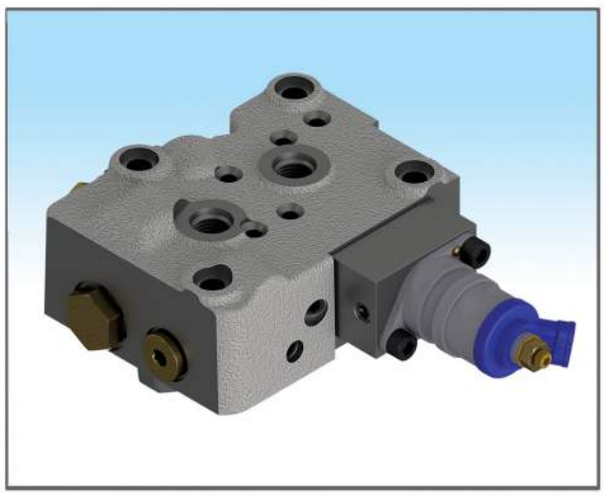

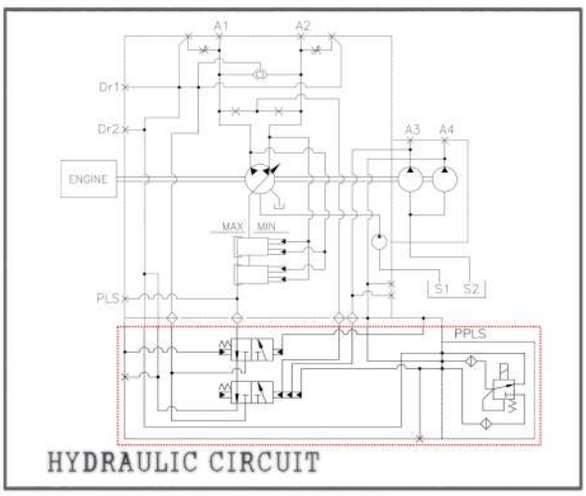

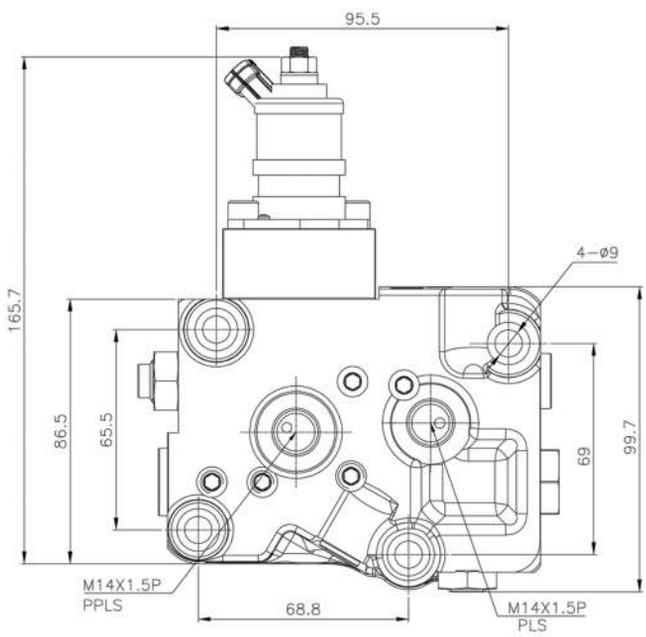

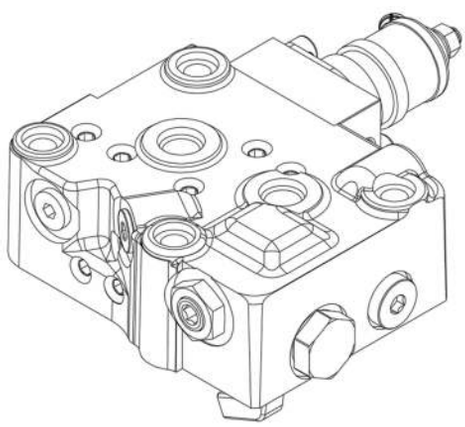

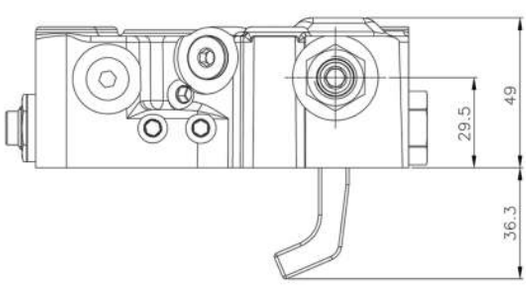

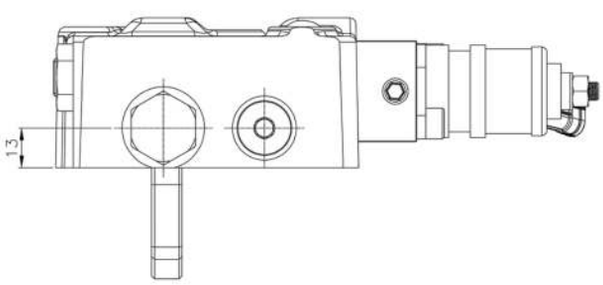

REGULATOR FOR CATERPILLAR(HBS80)



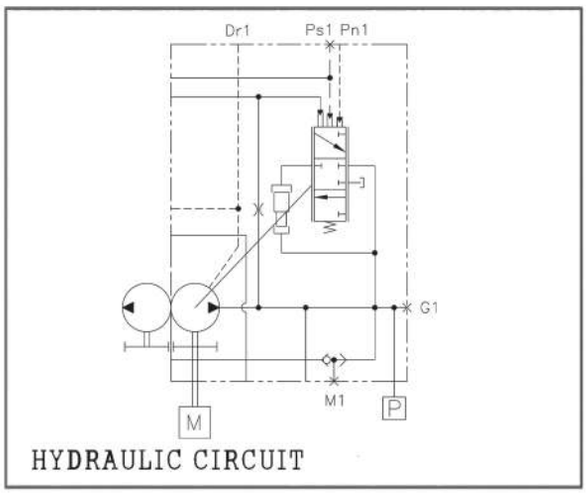

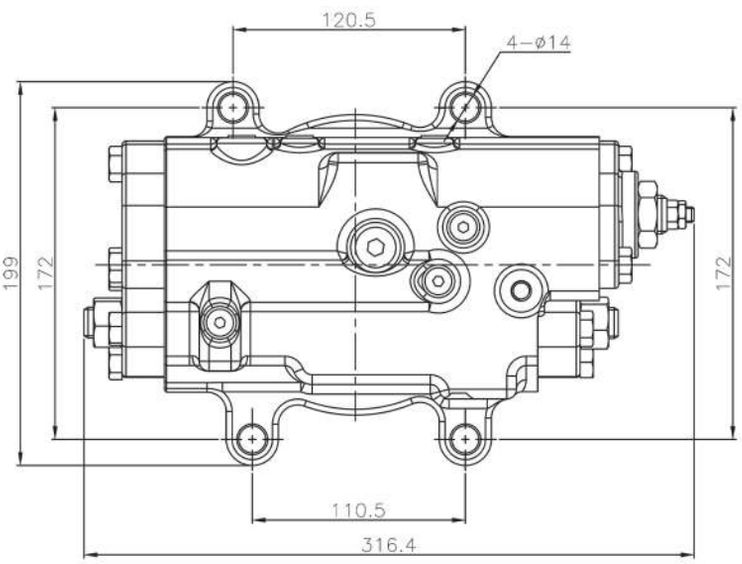

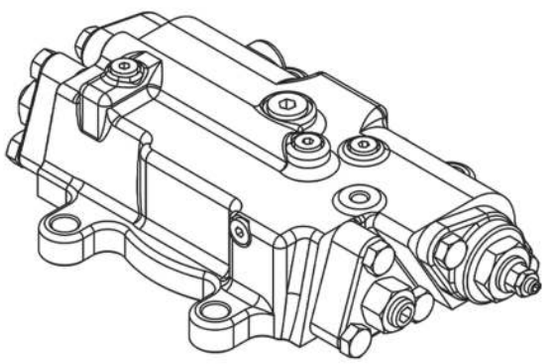

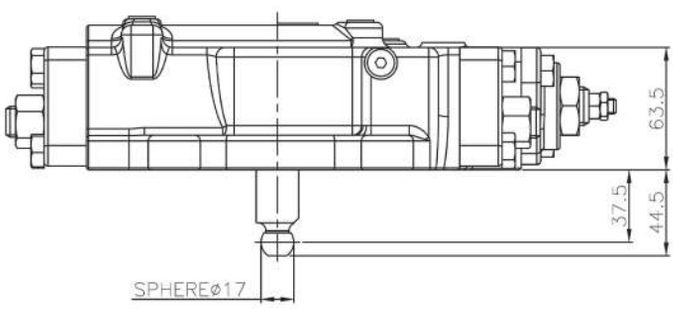

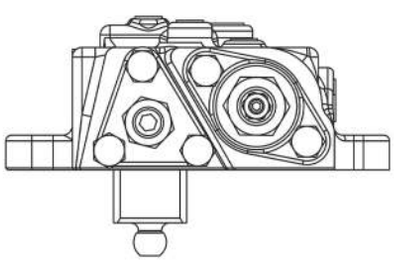

REGULATOR FOR CATERPILLAR(HBS120&140) FRONT TYPE

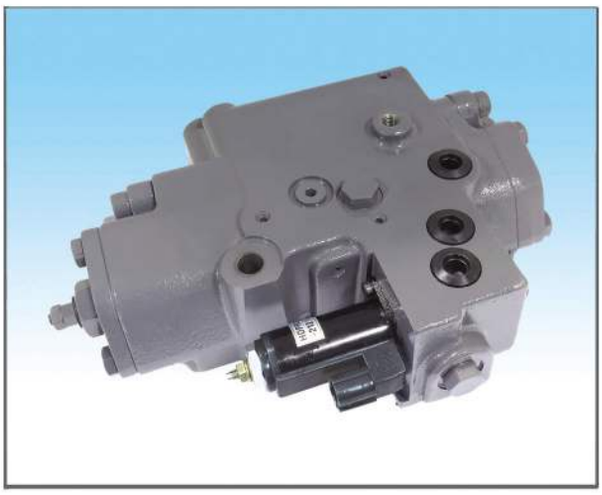

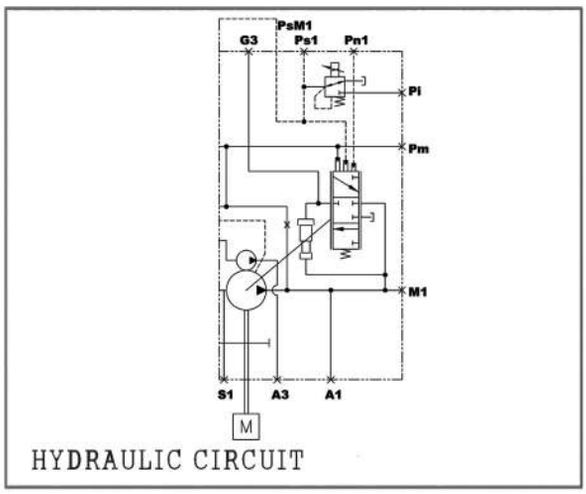

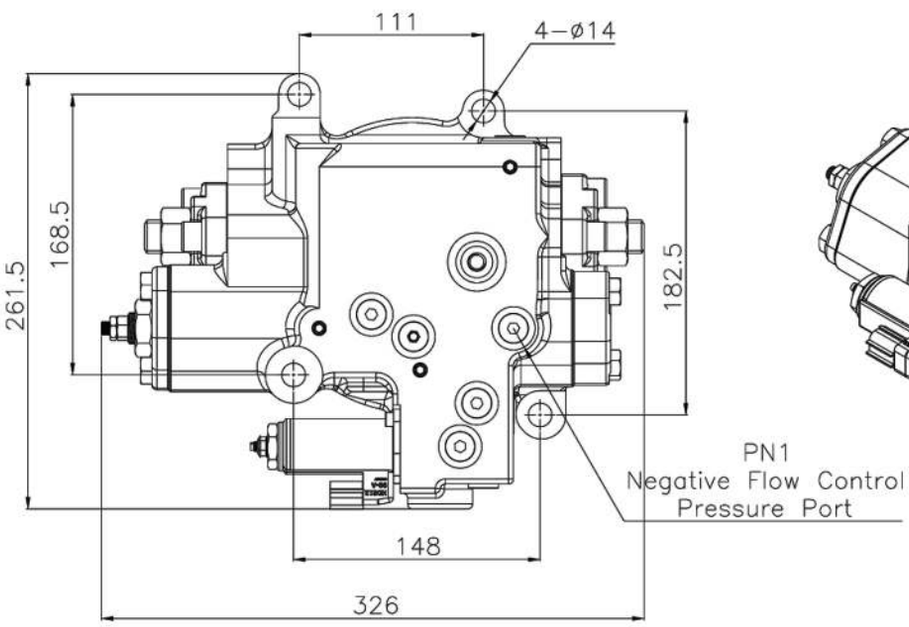

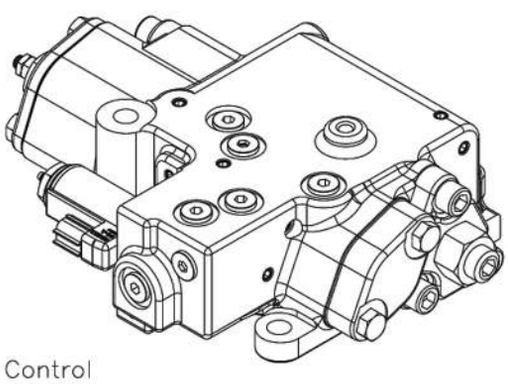

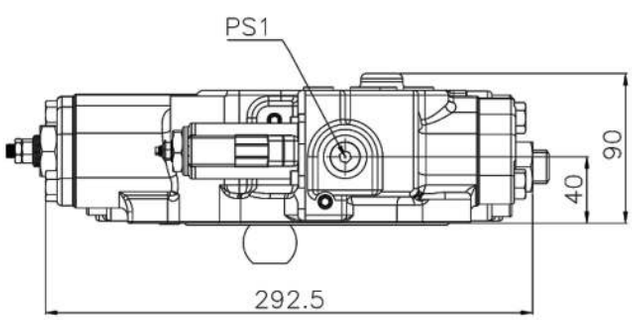

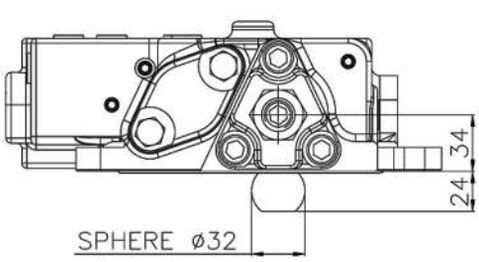

REGULATOR FOR CATERPILLAR(HBS120&140) REAR TYPE

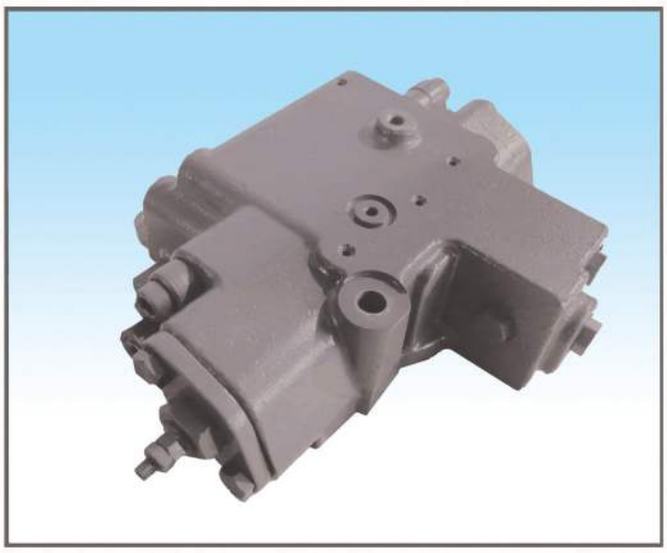

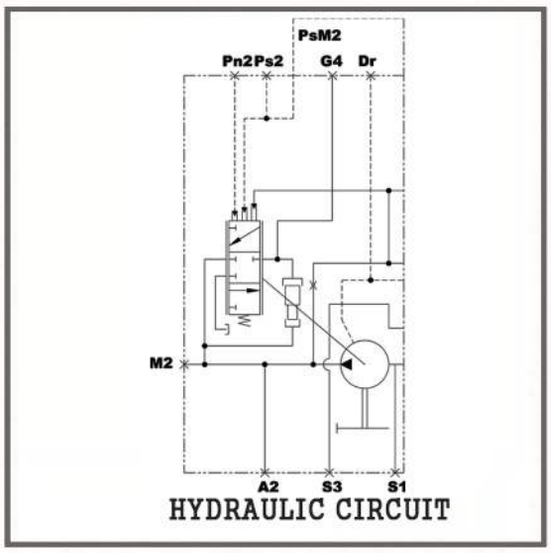

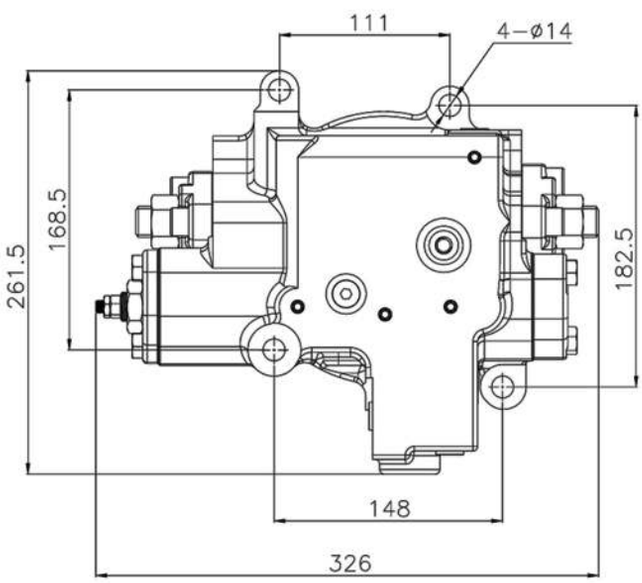

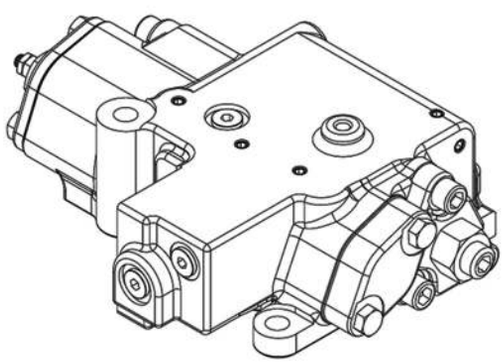

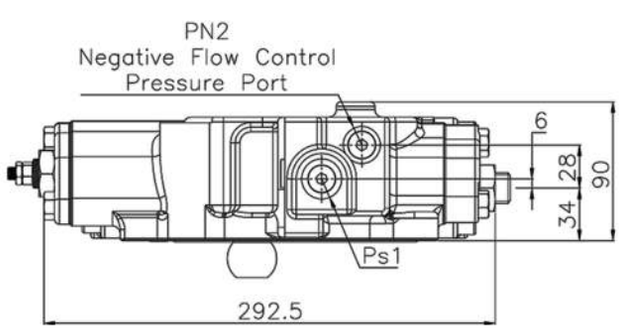

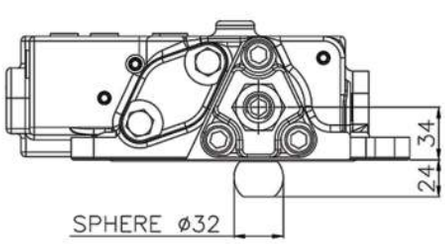

REGULATOR FOR HPC90(EATON54)
CLOSE CIRCUIT

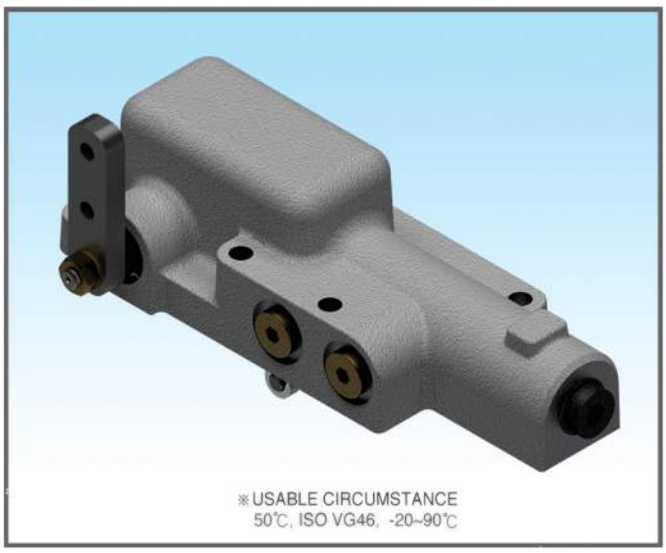

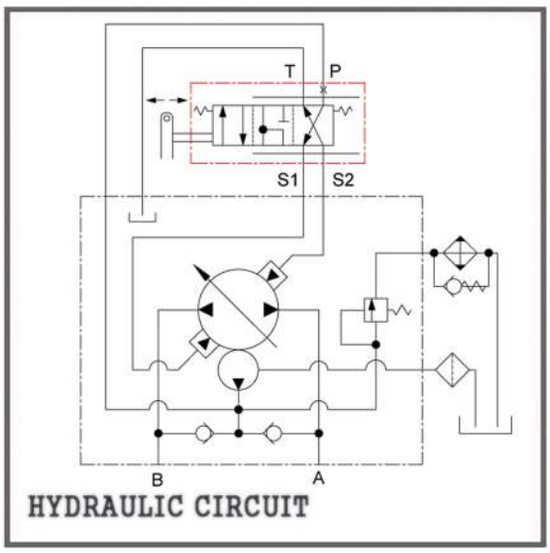

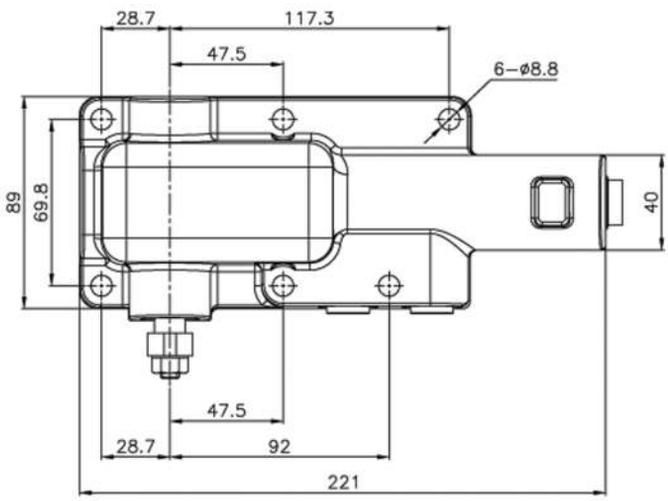

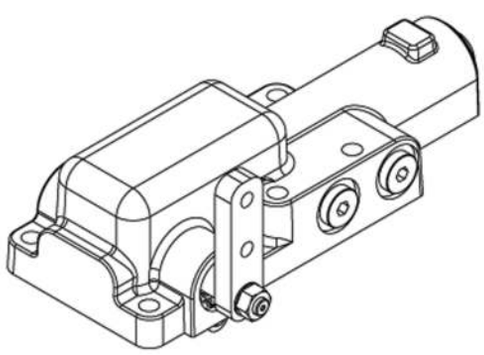

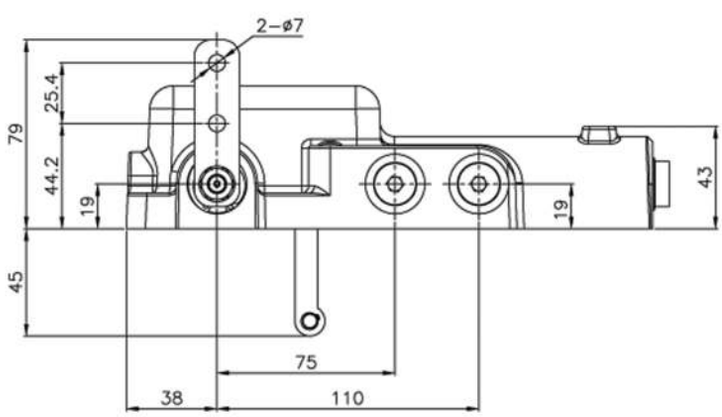

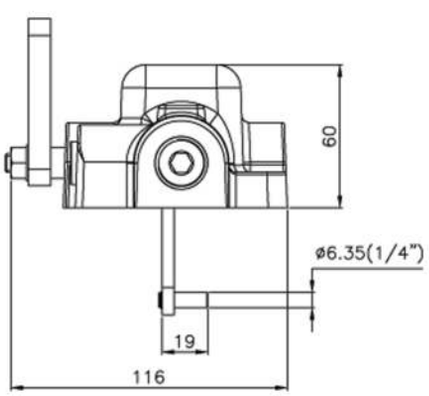

REGULATOR FOR HITACHI
FNOM(FRONT) TYPE



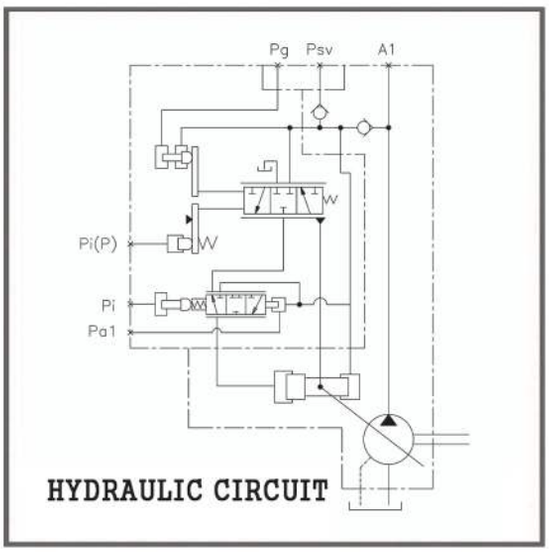

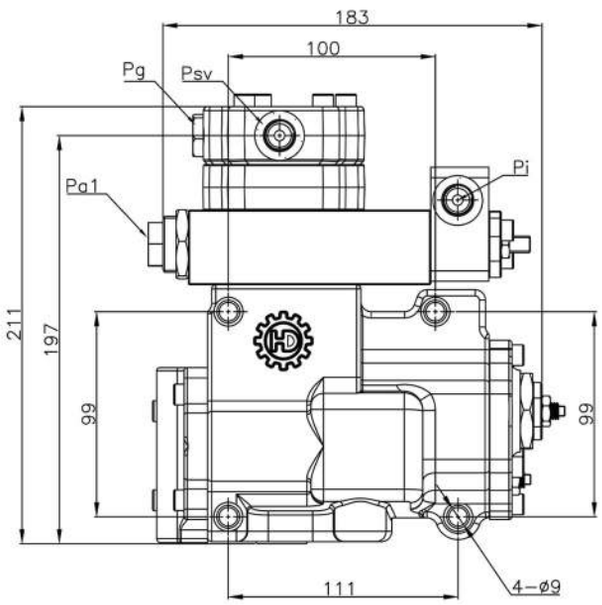

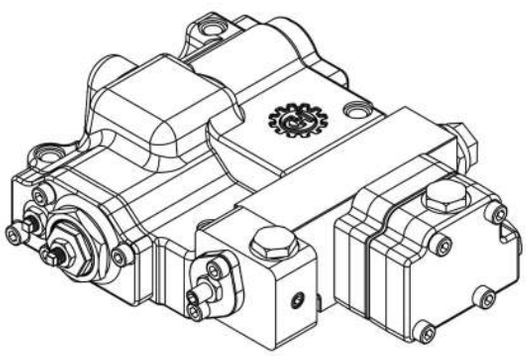

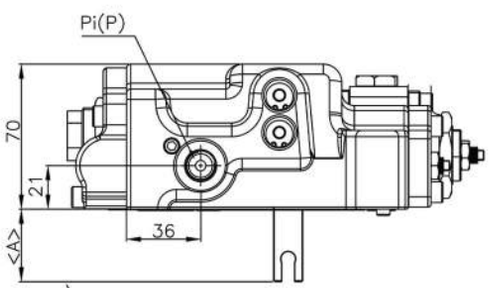

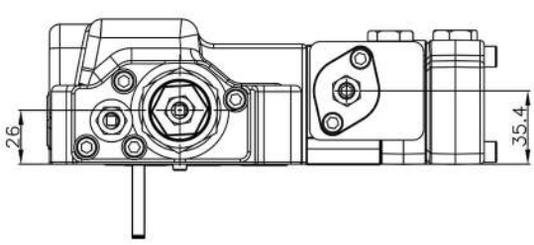

STANDARD DIMENSIONS

(mm)

MODEL	A
H3V63	22
H3V112	36
H3V140&180	57
H5V160 & 200	66

MODEL	A
H5V80	40.5
H5V140	48
H3V280	75.7
H5V160DPH & 200DPH	

REGULATOR FOR HITACHI
FNOS(REAR) TYPE



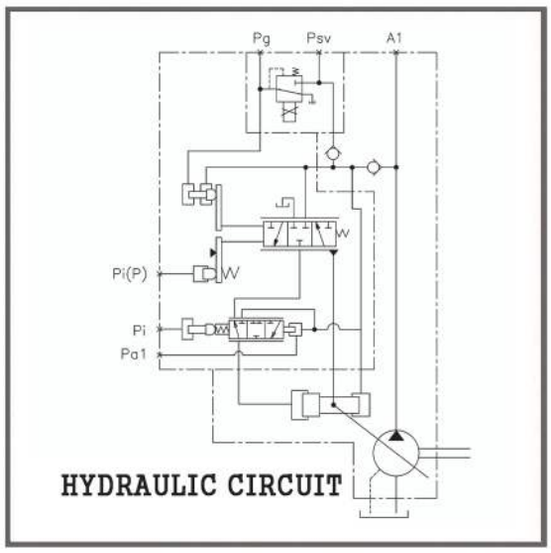

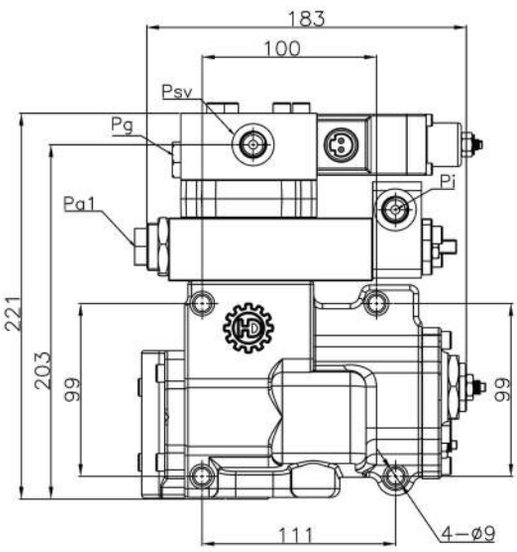

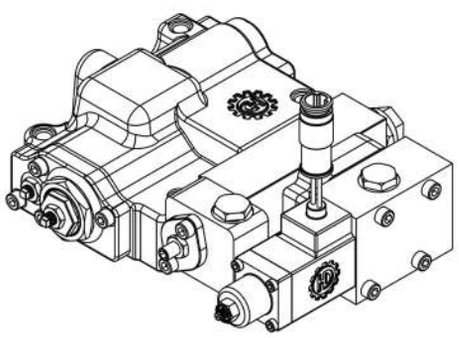

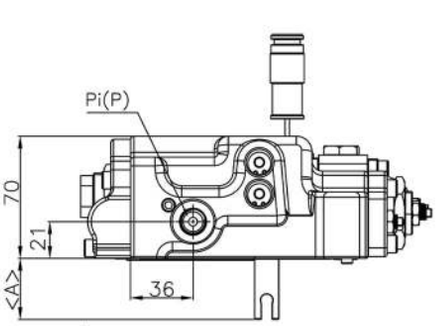

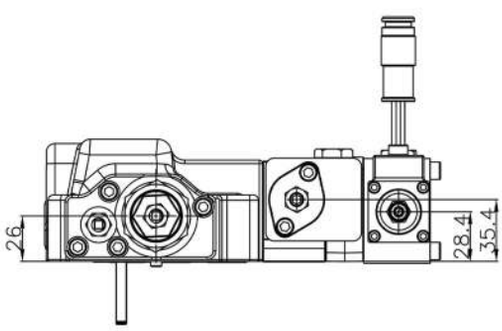

STANDARD DIMENSIONS

(mm)

MODEL	A
H3V63	22
H3V112	36
H3V140&180	57
H5V160 & 200	66

MODEL	A
H5V80	40.5
H5V140	48
H3V280	75.7
H5V160DPH & 200DPH	

REGULATOR FOR HPV116/145(C/D/F/G/H/J)TYPE

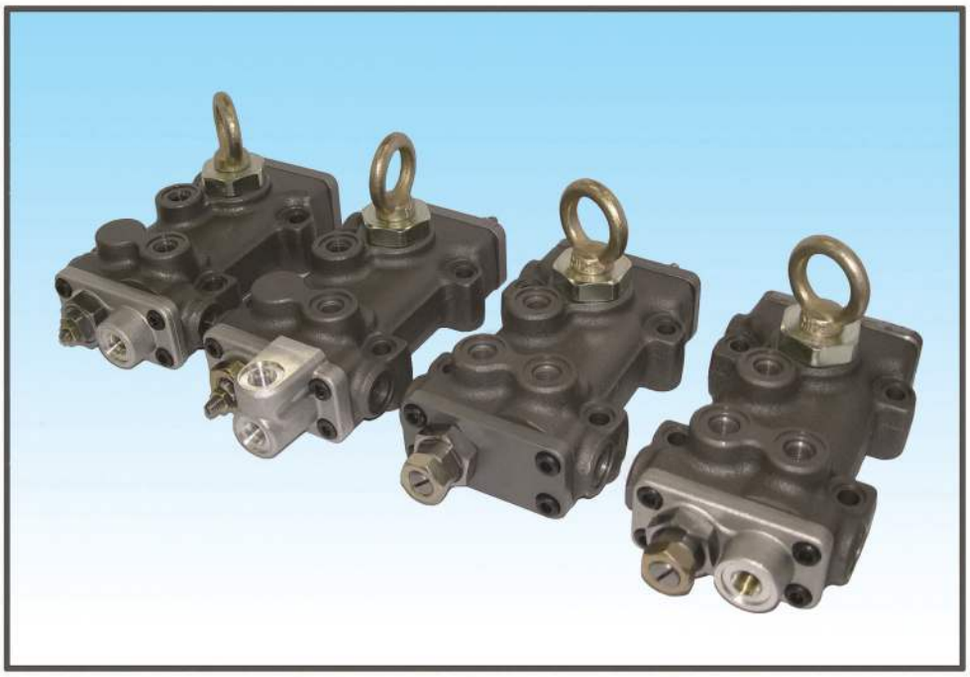

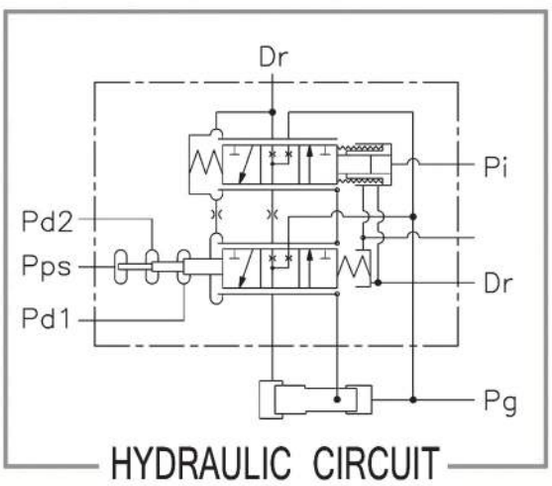

HYDRAULIC CIRCUIT

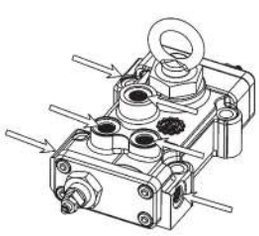

6-PORT
HPV145(C&D-TYPE)

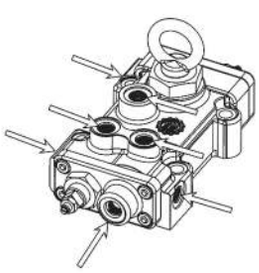

7-PORT
HPV145(F-TYPE)

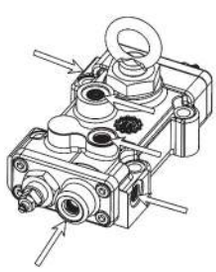

5-PORT
HPV145(J/ G-TYPE)

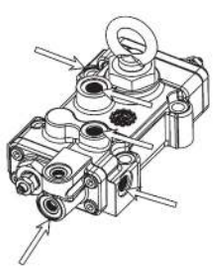

5-PORT
HPV145(H-TYPE)

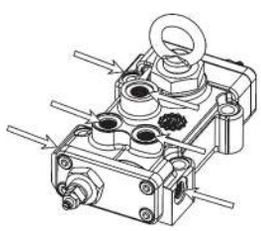

6-PORT
HPV116(6-PORT)

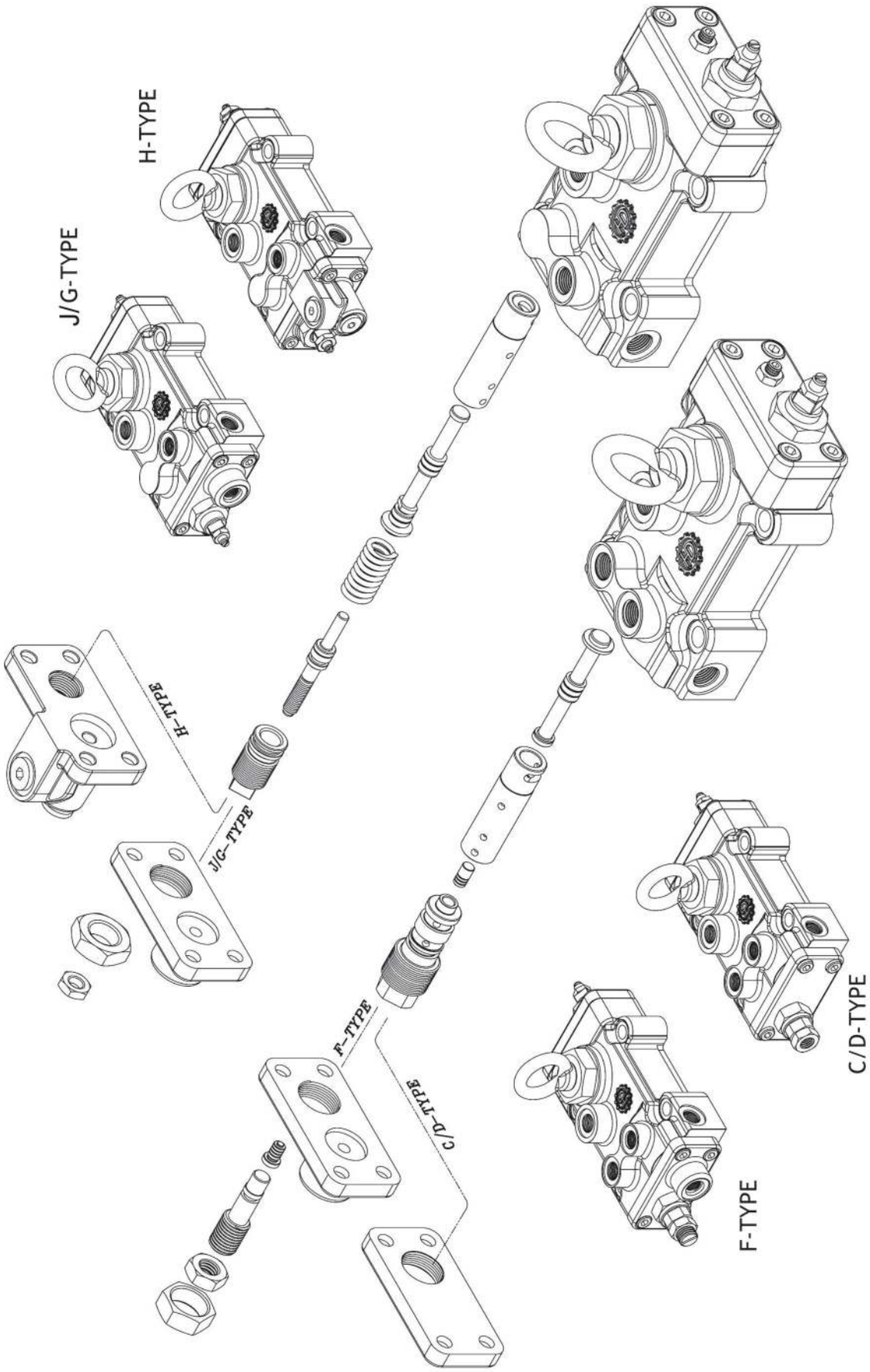

HAN DOK HYDRAULIC

REGULATOR FOR HPVO102 & HPVO118 TYPE

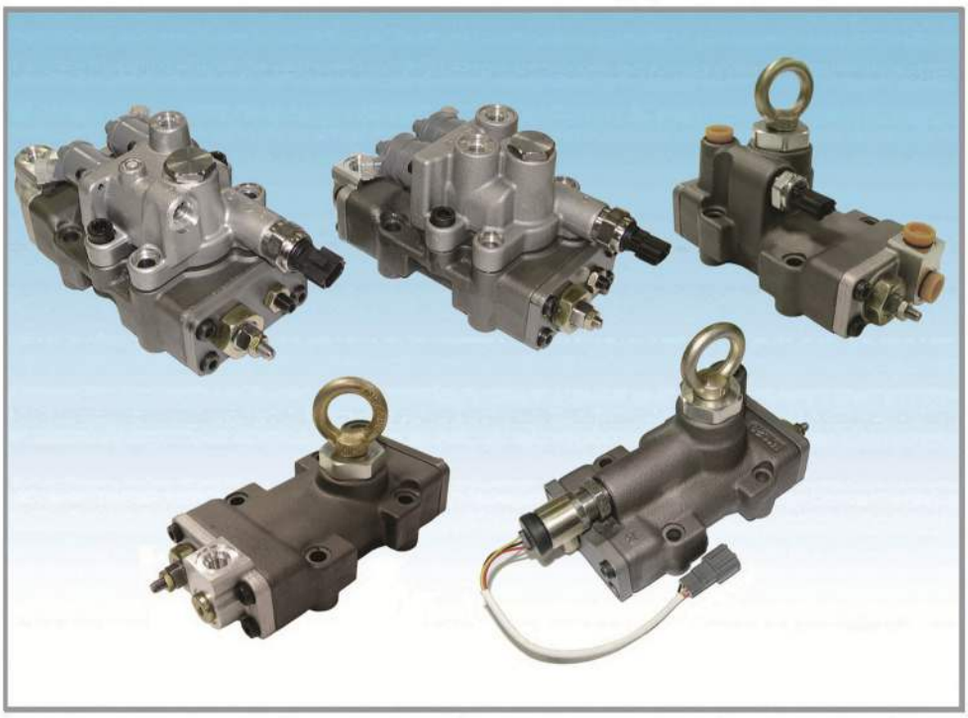

<<HYDRAULIC CIRCUIT>>

HPVO102		HPVO118
NORMAL-TYPE	EPR VALVE(ZX&GW)TYPE-R	EPR VALVE(ZX&GW)TYPE-R
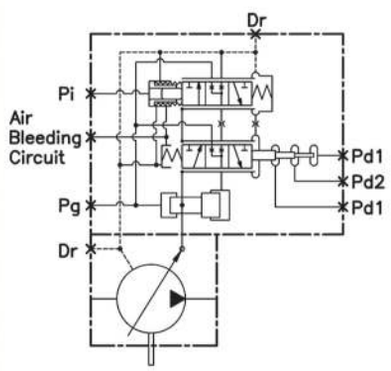	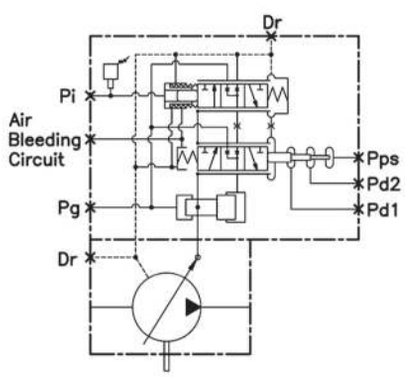	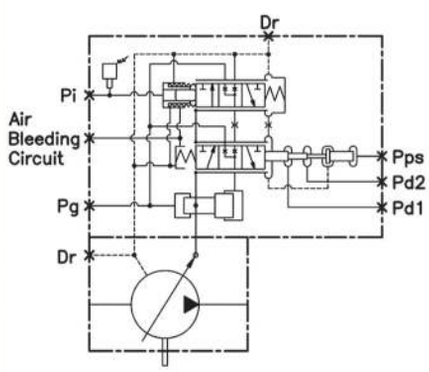
LVDT SENSOR-TYPE	EPR VALVE(ZX&GW)TYPE-L	EPR VALVE(ZX&GW)TYPE-L
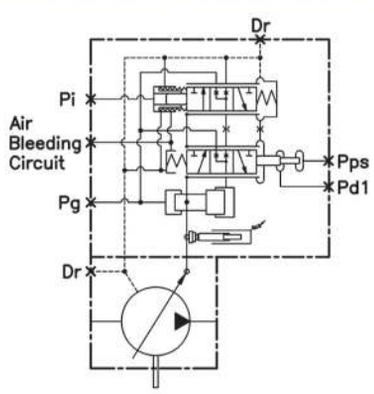	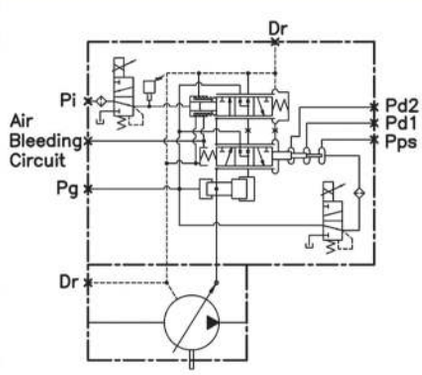	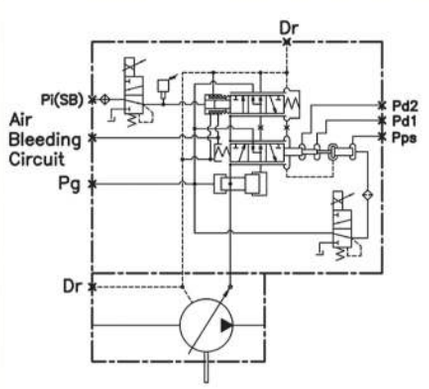

HPVO102

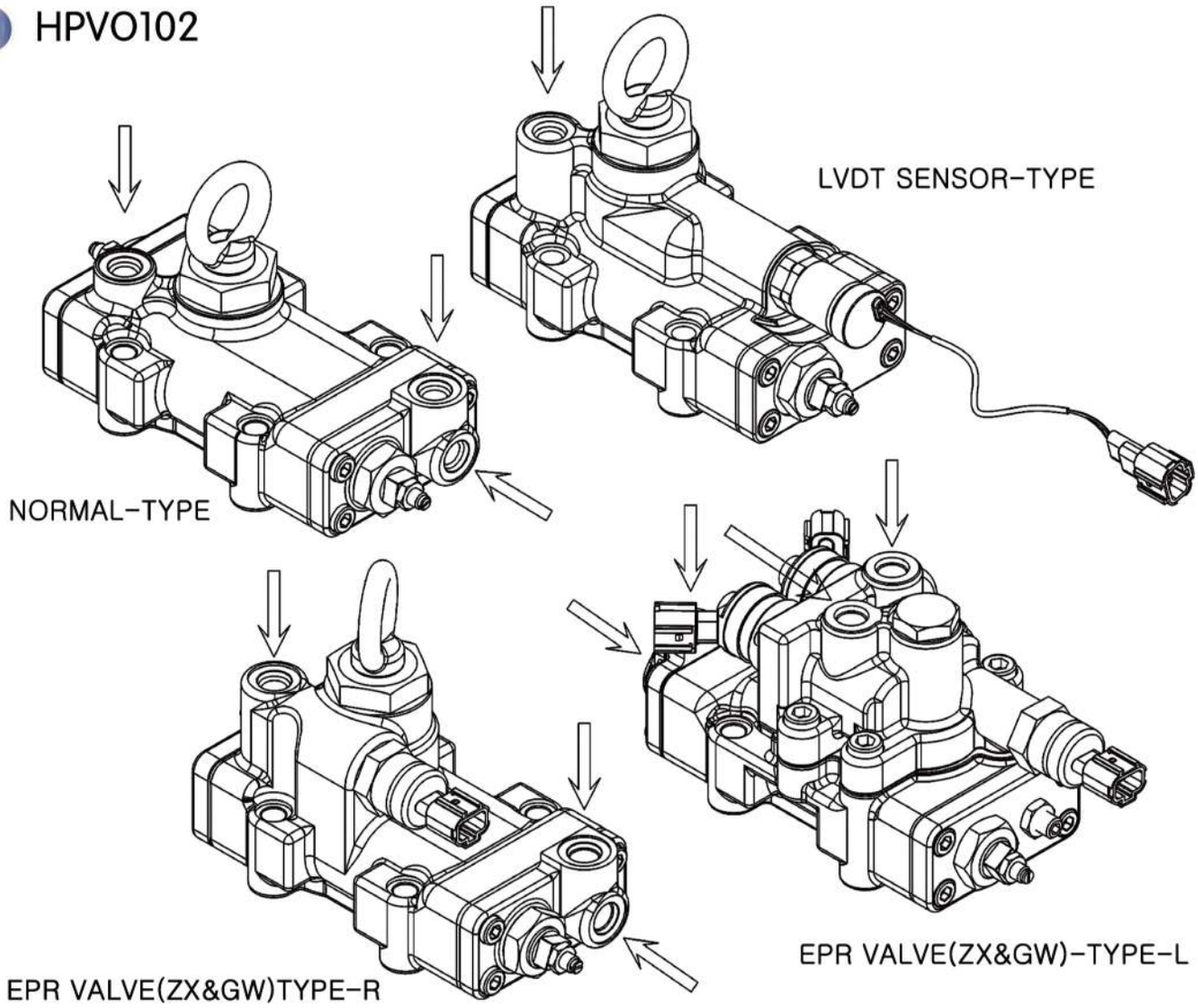

HPVO118

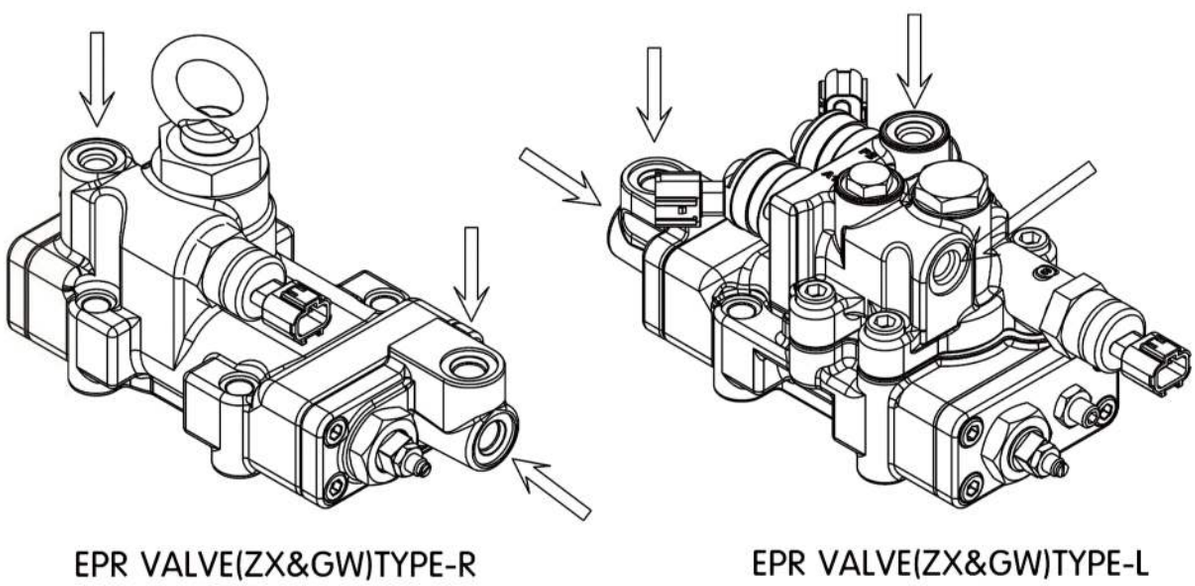

HANDOK HYDRAULIC

Power of Hydraulic

HSVD2-SERIES



HP2D-SERIES



H3V.SP-SERIES



H10VO-SERIES



H5VG200SH



H5V.DPH-SERIES

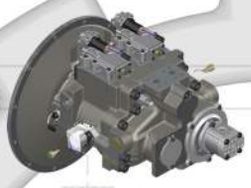

H3VL-SERIES



HBS-SERIES



HAG-SERIES



H2FO/H2FM-SERIES



HM SERIES



H3SP30/36



3E00



HBS-SERIES



H7V-SERIES



9C WITH MANIFOLD



9N WITH EPR



A10V-SINGLE



A10V-DOUBLE



HGP-DOUBLE



HGP-SINGLE



AP2D-DOUBLE



PVD-SERIES



SBS-SERIES



HANDOK HYDRAULIC

13, Golden root-ro 130beon-gil, Juchon-myeon
Gimhae-si, Gyeong-nam, Korea

TEL : 82-55-310-1300

FAX : 82-55-326-2245

E-mail : handok@hydraulic.co.kr

www.hydraulic.co.kr

This publication, or parts thereof, may not be reproduced in any form, By and method for any purpose.
Copyright © 2023 All rights reserved by HANDOK HYDRAULIC.
Printed in Korea.